708P91373
05/18/2018

Xerox® VersaLink® B400 & B405 Family Multifunction Printer Service Manual

Xerox® VersaLink® B400 and B405 Family Multifunction Printer

Service Documentation

VersaLink B400 and B405 Family Multifunction Printer Service Manual

708P91373

BUS Update 2

05/18/2018

Prepared by:

Technical Communications Solutions

Xerox Ltd

Waterside, Ground Floor

Uxbridge

UB8 1HS, UK

United Kingdom

© 2018 Xerox Corporation. All Rights Reserved. Xerox®, Xerox, Design® and VersaLink® are trademarks of Xerox Corporation in the United States and/or other countries.

Other company trademarks are also acknowledged.

NOTICE

While every care has been taken in the preparation of this manual, no liability will be accepted by Xerox Europe arising out of any inaccuracies or omissions.

All service documentation is supplied to Xerox external customers for informational purposes only. Xerox service documentation is intended for use by certified, product trained service personnel only. Xerox does not warrant or represent that it will notify or provide to such customer any future change to this documentation. Customer performed service of equipment, or modules, components or parts of such equipment may affect whether Xerox is responsible to fix machine defects under the warranty offered by Xerox with respect to such equipment. You should consult the applicable warranty for its terms regarding customer or third-party provided service.

Introduction

About This Manual iii
How To Use This Manual iii
Change History iv
Mod/Tag Identification iv
Voltages Resistances and Tolerances v
Safety Information v
Health and Safety Incident reporting vii
Translation of Warnings viii

About This Manual

This manual is the primary document used for diagnosing, repairing, maintaining, and troubleshooting the Xerox® VersaLink® B400 Printer and Xerox® VersaLink® B405 Multifunction Printer. The Service Manual is the controlling publication for a service call. To ensure product understanding, complete the Xerox Service Training Program for these devices.

Organization

Section titles and the information contained in each is presented in the following paragraphs:

Section 1 Service Call Procedures

This section is used to start and complete a service call. The procedures in this section will either direct you to a Repair Analysis Procedure (RAP) or identify a faulty component or subassembly.

Section 2 Status Indicator Repair Analysis Procedures

This section contains the Repair Analysis Procedures (RAPs) and checkouts necessary to diagnose, isolate and repair faults other than image quality faults.

Section 3 Image Quality

This section contains the Image Quality Repair Analysis Procedures (IQ RAPs), checkouts and setup procedures necessary to diagnose, isolate and repair image quality faults.

Section 4 Repairs/Adjustments

This section contains the instructions for removal, replacement, and adjustment of parts within the device.

Section 5 Parts List

This section contains the illustrated spare parts list. Any part that is spared or that must be removed to access a spared part is illustrated.

Section 6 General Procedures / Information

This section contains all other procedures, product specifications and general information.

Section 7 Wiring Data

This section contains the wiring and PJ location diagrams.

Section 8 Principles of Operation

This section contains details of printer operation and component locations.

Component Names

Names of parts that appear in the wiring data may not be exactly the same as the names that appear on the part or listed in the parts lists. For example; a part called the registration chute assembly may appear as Assembly, Chute REGI.

NOTE: *The optional Solid State Drive (SSD), PL 18.1A (B400) or PL 18.1B (B405), is referred to as the **HDD** throughout this manual.*

How To Use This Manual

Always start with the Service Call Procedures, Section 1. Perform Initial Actions and verify the problem, then follow the directions given.

How to Differentiate Between Machine Variants

When a procedure, parts list description or other reference is unique across different machine variants, the appropriate variant name will be quoted. For example, B400 (Single-Function Printer) or B405 (Multi-Function Printer). Any artwork will also be variant-specific.

NOTE: *This manual services all configurations of the machine. Ignore references to options not installed on the machine.*

Warnings, Cautions And Notes

WARNING

A warning is used whenever an operating or maintenance procedure, practice, condition or statement, if not strictly observed, could result in personal injury.

A translated version of all warnings is in Translation of Warnings.

CAUTION

A caution is used whenever an operation or maintenance procedure, practice, condition or statement, if not strictly observed, could result in damage to the equipment.

NOTE: *A note is used where it is essential to highlight a procedure, practice, condition or statement.*

Change History

This page gives information on major changes to the service manual. Go to the relevant update.

- BUS Update June 2017
- BUS Update May 2018

BUS Update June 2017

The following sections are updated:

- 1 Service Call Procedures
- 2 Status Indicator RAPs
- 3 Image Quality
- 4 Repairs
- 5 Parts List
- 6 General Procedures
- 7 Wiring
- 8 Principles of Operation

The following procedures are new:

- OF 3 Special Boot Modes RAP
- IQ 21 Repeating Defects Procedure
- REP 18.15 Hard Disk Drive (HDD)

BUS Update May 2018

The following sections are updated:

- 2 Status Indicator RAPs
- 3 Image Quality
- 4 Repairs
- 5 Parts List
- 6 General Procedures / Information

The following procedures are new:

- 010-398 Rear Fan Fail RAP
- 016-426 Smart eSolutions Connect Fail RAP
- 017-514 Inhibited Version RAP
- 042-398 LV Fan1 Fail RAP
- 050-596 Jam Zone IOT 3 RAP
- 092-321 ADC K Patch Error RAP
- IQ 22 Skew Check
- IQ 23 Registration Check
- REP 9.5 Tray 1 Lock Spring
- REP 11.29 Option Feeder Tray Lock Spring
- GP 28 Converting from Sold to Metered, or Metered to Sold
- Change TAG: 001

Mod/Tag Identification

Figure 1 shows the Mod/Tag identification symbols.

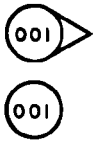

These with tag symbols are used to identify the components or configurations that are part of a machine change covered by this tag number.

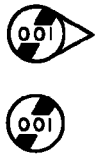

These without tag symbols are used to identify the components or configurations that are used when this tag is not fitted.

B-1-0364-A

Figure 1 Mod/Tag identification symbols

Voltages Resistances and Tolerances

For AC power specifications, refer to GP 17 Electrical Power Requirements.

DC Voltage Levels and Tolerances

DC voltages should be measured between an available test point and a machine ground. Table 1 shows the range of the common voltages.

Table 1 DC Voltage Levels

Nominal Voltage	Voltage Tolerance Range
0V	0.00 to 0.10V
+3.3V standby	+3.23V to +3.43V
+3.3V	+3.23V to +3.43V
+5V and +5V standby	+4.75V to +5.25V
+12V	+11.4V to +12.6V
+24V	+23.28V to +25.73V

Non-standard voltage levels will be quoted on the relevant circuit diagram. All other voltage levels are plus or minus 10%.

Resistance Tolerances

All resistance measurement tolerances are plus or minus 10%, unless otherwise stated in the procedure.

LVPS overcurrent protection circuit

Each output (+24VDC, +5VDC,+3.3VDC) of the LVPS, PL 18.1A Item 10 (B400) or PL 18.1B Item 10 (B405), stops all outputs if shorted to ground or between grounds.

LVPS overvoltage protection circuit

Each output (+24VDC, +5VDC,+3.3VDC) of the LVPS, PL 18.1A Item 10 (B400) or PL 18.1B Item 10 (B405) stops all outputs if there is overvoltage.

Refer to Table 2 for the operating voltage of the overvoltage protection threshold of each output.

Table 2 LVPS Overvoltage protection thresholds

Output	Overvoltage protection threshold
+24V DC	27V DC ~ 36V DC
+5V DC	7V DC
+3.3V DC	4.6V DC

Safety Information

The WARNING that follows is for general guidance when live working.

WARNING

Do not work in a confined space. 1m (39 inches) space is needed for safe working.

Safety Symbols

The following precautionary symbols may appear on the device.

Figure 1 indicates Danger High Voltage.

Figure 1 High voltage symbol

Figure 2 is the Protective Ground (Earth) symbol.

Figure 2 Protective ground (earth) symbol

Figure 3 is the symbol indicating a hot surface. Use caution to avoid personal injury.

Figure 3 Hot surface symbol

Figure 4 is the symbol indicating that the surface becomes hot while the printer is running. After turning off the power, wait at least the number of minutes indicated.

Figure 4 Wait for surface cool-down symbol

Figure 5 is the symbol indicating where avoid pinching fingers in the printer. Use caution to avoid personal injury.

Figure 5 Pinch injury symbol

Figure 6 is the symbol to use caution (or draws attention to a particular component). Refer to the manual(s) for information.

Figure 6 Use caution symbol

Figure 7 is the symbol indicating that the item is sensitive and should not be touched.

Figure 7 Do not touch symbol

Figure 8 is the symbol indicating the item is sensitive to sunlight, and exposure to it will reduce its life span.

Figure 8 No sunlight symbol

Figure 9 is the symbol indicating the item is sensitive to any light, and exposure to it will reduce its life span.

Figure 9 No light symbol

Toner Cartridge

The product contains a toner cartridge that is recyclable. Under various state and local laws, it may be illegal to dispose of the cartridge into the municipal waste. Check with the local waste officials for details on recycling options or the proper disposal procedures.

Fuses

WARNING

Do not install a fuse of a different type or rating. Installing the wrong type or rating of fuse can cause overheating and a risk of fire.

Part Replacement

Only use genuine Xerox approved spare parts or components to maintain compliance with legislation and safety certification. Also refer to GP 21 Restriction of Hazardous Substances (RoHS).

Disassembly Precautions

Do not leave the machine with any covers removed at a customer location.

Reassembly Precautions

Use extreme care during assembly. Check all harnesses to ensure they do not contact moving parts and do not get trapped between components.

General Procedures

Observe all warnings displayed on the machine and written in the service procedures. Do not attempt to perform any task that is not specified in the service procedures.

Health and Safety Incident reporting

I. Summary

This section defines requirements for notification of health and safety incidents involving Xerox products (equipment and materials) at customer locations.

II. Scope

Xerox Corporation and subsidiaries worldwide.

III. Objective

To enable prompt resolution of health and safety incidents involving Xerox products and to ensure Xerox regulatory compliance.

IV. Definitions

Incident:

An event or condition occurring in a customer account that has resulted in injury, illness or property damage. Examples of incidents include machine fires, smoke generation, physical injury to an operator or service representative. Alleged events and product conditions are included in this definition.

V. Requirements

Initial Report:

1. Xerox organizations shall establish a process for individuals to report product incidents to Xerox Environment Health and Safety within 24 hours of becoming aware of the event.
2. The information to be provided at the time of reporting is contained in Appendix A (Health and Safety Incident Report involving a Xerox product).
3. The initial notification may be made by the method that follows:
   - Email Xerox EH&S at: usa.product.incident@xerox.com.
   - Fax Xerox EH&S at: 1-585-422-8217 (intelnet 8*222-8217).

   NOTE: *If sending a fax, please also send the original via internal mail.*

Responsibilities for resolution:

1. Business Groups/Product Design Teams responsible for the product involved in the incident shall:
   a. Manage field bulletins, customer correspondence, product recalls, safety retrofits.
   b. Fund all field retrofits.
2. Field Service Operations shall:
   a. Preserve the Xerox product involved and the scene of the incident inclusive of any associated equipment located in the vicinity of the incident.
   b. Return any affected equipment/part(s) to the location designated by Xerox EH&S and/or the Business Division.
   c. Implement all safety retrofits.
3. Xerox EH&S shall:
   a. Manage and report all incident investigation activities.
   b. Review and approve proposed product corrective actions and retrofits, if necessary.
   c. Manage all communications and correspondence with government agencies.
   d. Define actions to correct confirmed incidents.

VI. Appendices

The Health and Safety Incident Report involving a Xerox Product (Form # EH&S-700) is available in the locations that follow:

- On electronic documentation (EDOC), located in the Library.
- In the hardcopy, located at the end of the manual.

WARNING

A warning is used whenever an operating or maintenance procedure, practice, condition or statement, if not strictly observed, could result in personal injury.

DANGER: Une note Danger est utilisée chaque fois qu'une procédure d'utilisation ou de maintenance peut être cause de blessure si elle n'est pas strictement respectée.

AVVERTENZA: Un segnale di avvertenza è utilizzato ogni volta che una procedura operativa o di manutenzione, una pratica, una condizione o un'istruzione, se non strettamente osservata, potrebbe causare lesioni personali.

VORSICHT: Weist darauf hin, dass ein Abweichen von den angeführten Arbeits- und Wartungsanweisungen gesundheitliche Schäden, möglicherweise sogar schwere Verletzungen zur Folge haben kann.

AVISO:Un aviso se utiliza siempre que un procedimiento de operación o mantenimiento, práctica o condición puede causar daños personales si no se respetan estrictamente.

WARNING

Do not work in a confined space. 1 m (39 inches) space is needed for safe working.

DANGER : Ne pas travailler dans un espace restreint. 1 mètre d'espace est nécessaire pour un dépannage en toute sécurité.

AVVERTENZA: Non lavorare in uno spazio limitato; è necessario uno spazio di almeno un metro attorno alla macchina per la sicurezza dell'operatore.

VORSICHT: Nur mit ausreichendem Bewegungsspielraum (1 m) arbeiten.

AVISO: No trabaje en un espacio reducido. Se necesita 1 metro de espacio para trabajar con seguridad.

WARNING

USA and Canada. Do not install this machine in a hallway or exit route that does not have 1.12 m (44 inches) of space additional to the normal space requirements in front of the machine. To conform with fire regulations this additional 1.12 m (44 inches) of space is needed in front of the machine in hallway and exit routes.

DANGER : États-Unis et Canada. Si cette machine est installée dans un couloir ou une voie de sortie, 1,12 m (44 pouces) d'espace supplémentaire à l'espace normal doit être disponible devant la machine conformément aux normes de sécurité d'incendie.

AVVERTENZA: N/A

VORSICHT: N/A

AVISO: Estados Unidos y Canadá. No instale esta máquina en un corredor o ruta de salida que no tenga 1.12 m (44 pulgadas) de ancho delante de la máquina, sin incluir el espacio que ocupe la máquina. Este espacio adicional de 1.12 m (44 pulgadas) delante de la máquina en corredores y rutas de salida es necesario para cumplir los requisitos de las normas sobre incendios.

WARNING

Do not install a fuse of a different type or rating. Installing the wrong type or rating of fuse can cause overheating and a risk of fire.

DANGER : Ne pas installer de fusible de type ou de calibre différent. Il existe un risque de surchauffe voire d'incendie.

AVVERTENZA: per evitare rischi di surriscaldamento o d'incendio, non installare un fusibile di tipo o carica diversi da quelli esistenti.

VORSICHT: Keine Sicherungen anderer Art oder anderer Leistung auf dem IOT-PWB installieren - Überhitzungs- und Brandgefahr.

AVISO: No instale un fusible de potencia o tipo distinto. Un fusible de potencia o tipo distinto puede producir sobrecalentamiento y el riesgo de incendio.

WARNING

Ensure that the electricity to the machine is switched off while performing tasks that do not need electricity. Refer to GP 10. Disconnect the power cord. Electricity can cause death or injury. Moving parts can cause injury.

DANGER : Assurez-vous que la machine est hors tension lorsque vous effectuez des tâches ne nécessitant pas d'alimentation électrique. Reportez-vous à GP 10. Débranchez le câble d'alimentation pour prévenir tout risque d'électrocution. Les chocs électriques peuvent présenter un danger de mort ou entraîner des blessures graves. De plus, certaines pièces, lorsqu'elles sont en mouvement, peuvent être source de blessures graves.

AVVERTENZA: Accertarsi di isolare la macchina dall'alimentazione elettrica quando si eseguono attività che non richiedono elettricità. Vedere GP 10. Scollegare il cavo di alimentazione. L'elettricità può causare morte o lesioni personali. Le parti in movimento possono causare lesioni personali.

VORSICHT: Sicherstellen, dass die Stromversorgung des Geräts bei Arbeiten, die keinen Strom erfordern, ausgeschaltet ist. Siehe auch GP 10. Den Netzstecker ziehen. Andernfalls besteht Stromschlaggefahr und Verletzungsgefahr durch bewegliche Teile.

AVISO: Asegúrese de mantener la máquina aislada de la energía eléctrica mientras realiza tareas que no necesitan electricidad. Consulte GP 10. Desconecte el cable de alimentación. La energía eléctrica puede producir lesiones o incluso la muerte. Las piezas sueltas pueden producir lesiones.

WARNING

Switch off the electricity to the machine. Refer to GP 10. Disconnect the power cord from the customer supply while performing tasks that do not need electricity. Electricity can cause death or injury. Moving parts can cause injury.

DANGER : Mettez la machine hors tension. Reportez-vous à GP 10. Déconnectez le cordon d'alimentation de l'alimentation du client lorsque vous réalisez des tâches qui ne nécessitent pas d'électricité. L'électricité peut être à l'origine de blessures, voire d'un accident mortel. Les pièces amovibles peuvent être à l'origine de blessures.

AVVERTENZA: Spegnere la macchina. Vedere GP 10. Scollegare il cavo di alimentazione dall'alimentatore quando si eseguono attività che non richiedono elettricità. L'elettricità può causare morte o lesioni personali. Le parti in movimento possono causare lesioni personali.

VORSICHT: Schalten Sie die Stromversorgung der Maschine ab. Siehe auch GP 10. Ziehen Sie das Stromkabel ab, wenn Sie Aufgaben ausführen, für die keine Stromversorgung benötigt wird. Stromschläge können Todesfällen oder Verletzungen verursachen. Bewegliche Teile können zu Verletzungen führen.

AVISO: Apague la electricidad de la máquina. Consulte el GP 10. Desconecte el cable de alimentación eléctrica de la toma de pared mientras esté realizando tareas que no necesiten corriente. La electricidad puede causar daños o la muerte. Las partes móviles pueden causar daños.

WARNING

Do not touch the fuser while it is hot.

DANGER : Ne pas toucher au four pendant qu'il est encore chaud.

AVVERTENZA: Non toccare il fonditore quando è caldo.

VORSICHT: Fixierbereich erst berühren, wenn dieser abgekühlt ist.

AVISO: No toque el fusor mientras está caliente.

WARNING

Take care during this procedure. Sharp edges may be present that can cause injury.

DANGER : Exécuter cette procédure avec précaution. La présence de bords tranchants peut entraîner des blessures.

AVVERTENZA: procedere con cautela durante questa procedura. Possono essere presenti oggetti con bordi taglienti pericolosi.

VORSICHT: Bei diesem Vorgang vorsichtig vorgehen, damit keine Verletzungen durch die scharfen Kanten entstehen.

AVISO: Tenga cuidado al efectuar este procedimiento. Puede haber bordes afilados que podrían producir lesiones.

WARNING

Mandatory safety warning. This procedure must be performed by 2 people. The module is heavy.

DANGER: Avertissement obligatoire. Cette procédure doit être effectuée par 2 personnes. Le module est très lourd.

AVVERTENZA: Avviso di sicurezza obbligatorio. A causa della pesantezza del modulo, questa procedura deve essere eseguita da due persone.

VORSICHT: Verbindliche Sicherheitsvorschrift - dieser Vorgang muss von zwei Personen ausgeführt werden, da das Modul sehr schwer ist.

AVISO: Aviso de seguridad obligatorio. Este procedimiento debe ejecutarse entre dos personas. El módulo pesa mucho.

WARNING

Use safe handling procedures when removing the module. Refer to GP 11. The module is heavy.

DANGER: Conformez-vous aux procédures de manipulation de sécurité pour le retrait du module. Reportez-vous à GP 11. Le module est lourd.

AVVERTENZA: Utilizzare procedure di gestione sicure durante la rimozione del modulo. Vedere GP 11. Il modulo è pesante.

VORSICHT: Verwenden Sie sichere Vorgehensweisen zum Entfernen des Moduls. Siehe auch GP 11. Das Modul ist sehr schwer.

AVISO: Utilice los procedimientos de seguridad cuando elimine el módulo. Consulte el GP 11. El módulo es pesado.

WARNING

Do not use the power button as a safety disconnect device. The power button is not a disconnect device. Disconnect the power cord from the supply to isolate the equipment.

DANGER : Ne vous servez pas de l’interrupteur comme d’un dispositif de déconnexion. L’interrupteur n’est pas un dispositif de déconnexion. Débranchez le câble d’alimentation de la prise électrique pour isoler l’appareil.

AVVERTENZA: L'interruttore di alimentazione non è un dispositivo di disconnessione di sicurezza e pertanto non va utilizzato come tale. Per isolare la macchina, scollegare il cavo di alimentazione dalla presa elettrica.

VORSICHT: Zur Unterbrechung der Gerätestromzufuhr nicht den Betriebsschalter verwenden, sondern das Netzkabel aus der Steckdose ziehen, an die das Gerät angeschlossen ist. Nur dann ist der Drucker vollständig vom Stromnetz getrennt.

AVISO: No utilice el botón de encendido/apagado como dispositivo de desconexión de seguridad. El botón de encendido/apagado no es un dispositivo de desconexión. Desconecte el cable de alimentación de la fuente de energía para aislar el equipo.

1 Service Call Procedures

SCP 1 Initial Actions 1-3
SCP 2 Call Actions 1-3
SCP 3 Fault Analysis 1-4
SCP 4 Subsystem Maintenance 1-5
SCP 5 Final Actions 1-6
SCP 6 Machine Features 1-6

SCP 1 Initial Actions

Service Call Procedures are used at the beginning of a service call. To collect information about the machine performance, use Initial Actions.

For more information, refer to SCP 6 Machine Features.

Procedure

WARNING

Ensure that the electricity to the machine is switched off while performing tasks that do not need electricity. Refer to GP 10. Disconnect the power cord. Electricity can cause death or injury. Moving parts can cause injury.

WARNING

Do not work in a confined space. 1m (39 inches) space is needed for safe working.

1. Take note of problems, error messages, and or error codes. If necessary, refer to GP 2 Fault Codes and History Files.
2. Switch off, then switch on the machine, GP 10.
3. If the UI is black, or fails POST with a green screen, go to OF 2.
4. Ask the operator to describe or demonstrate the problem.
5. If the problem is the result of an incorrect action by the operator, refer the operator to the user documentation.
6. Check the steps that follow:
   a. The power lead is connected to the wall outlet and to the machine.
   b. Documents are not loaded in the DADF or on the document glass.
   c. The paper is loaded correctly.
   d. All paper trays are closed.
   e. All doors are closed.
   f. If telephone line cables are installed, ensure that the cable is connected between the line socket and the wall jack.
   g. If a telephone line cable is installed, ensure that the customer telephone line is functioning.
7. Check the machine service log book for previous actions that are related to this call.
8. Go to SCP 2 Call Actions.

SCP 2 Call Actions

Before you diagnose the fault, use Call Actions to perform any general actions.

Procedure

1. If this is the first service call to this machine, if possible, perform the actions that follow:
   a. Check the machine configuration with the customer. Check that all the required hardware and software is installed. Check that all the required hardware and software is enabled.
   b. Check that all the machine settings are entered correctly.
   c. Mark off the hardware options, software options or Tags installed on the Tag matrix cards.
   d. Enter the machine information and the customer information in the service log book.
2. Review the copy, print and fax samples.
3. Ensure that the user access settings are correct. If necessary, refer to the user documentation.
4. If necessary, perform Network Clone Procedure GP 13.

   NOTE: *The clone file must be taken whenever the customer changes the network controller setting or after the system software is changed.*

5. Before switching off the machine or clearing the memory, check for a customer job in the memory.
6. Check and record the total impressions usage counter. If the usage counters are reset during the call, refer to dC132 Machine ID and Billing Data.
7. Go to SCP 3 Fault Analysis.

SCP 3 Fault Analysis

Fault Analysis is used to identify a fault.

Procedure

When diagnosing or repairing a fault in a particular subsystem, exercise the device in all modes until the fault is determined. In the instance of finding more than one fault or failure, correct one fault before going to the next fault. If no fault is found, go to SCP 4 Subsystem Maintenance.

Fault Codes

If a fault code is displayed, go to the relevant RAP. Also refer to Unresolved Faults.

Image Quality Defects

If the image quality is defective, go to the IQ1 Image Quality Entry RAP.

Unresolved Faults

If a fault cannot be resolved using the appropriate RAP, and only if instructed by 2nd level support, obtain a device log, refer to GP 23 Obtaining Audit and Device Logs. Escalate the problem to 2nd level support.

Other Faults

- Unusual machine noise, OF 1.
- Power On Self-Test faults, OF 2.

Additional Information

If necessary, refer to the following general procedures and information:

- GP 1 Service Diagnostics Entry and Exit
- GP 2 Fault Codes and History Logs
- GP 3 Device Information
- GP 4 Machine Software
- GP 5 Miscellaneous Checks
- GP 6 How to Check a Motor
- GP 7 How to Check a Sensor
- GP 8 How to Check a Solenoid or Clutch
- GP 9 How to Check a Switch
- GP 10 How to Power the Machine On or Off
- GP 11 How to Safely Lift or Move Heavy Modules
- GP 12 Machine Lubrication
- GP 13 Cloning Network Configurations
- GP 14 How to Set the Date and Time
- GP 15 Paper and Media Size Specifications
- GP 16 Installation Space Requirements
- GP 17 Electrical Power Requirements
- GP 18 Environmental Data
- GP 19 Administrator Log In
- GP 20 First Copy/Print Out Time and Power On Time
- GP 21 Restriction of Hazardous Substances (RoHS)
- GP 22 Printing Reports
- GP 23 Obtaining Audit and Device Logs
- GP 40 Glossary of Terms, Acronyms and Abbreviations

SCP 4 Subsystem Maintenance

Subsystem Maintenance contains information regarding the component life of the device.

Procedure

WARNING

Switch off the electricity to the machine GP 10. Disconnect the power cord from the customer supply while performing tasks that do not need electricity. Electricity can cause death or injury. Moving parts can cause injury.

1. Clean the feed rollers on every call.
2. Use the control panel to check maintenance item counters.
3. Compare the counter values to those listed in Table 1.
4. Advise the customer of any routine maintenance items that are approaching or over the service limit.

Inspection

Rollers

Replace rollers when you see any of the following defects:

- Flat spots
- Out of roundness
- Cracked rubber
- Loss of traction (tackiness) causing pick or feed failures

Gears

Replace gears that show any signs of wear or damage. Look for these problems:

- Thinned gear teeth
- Bent or missing gear teeth; check especially where a metal gear drives a plastic gear.
- Fractured or cracked gears (oil or incorrect grease on a plastic gear can cause the gear to crack).

Lubrication

CAUTION

Plastic parts deteriorate when unspecified lubricants or chemicals are used. To avoid damage, use only approved lubricant.

The printer is lubricated during assembly at the factory and does not require periodic lubrication. Some parts require lubrication following replacement. These parts are identified in the replacement procedures. When lubricating during replacement, use approved grease.

Component Life

The design life of the major components are shown in Table 1. Environmental conditions and actual use will vary these factors. The component life shown in Table 1 is for reference only.

Table 1 Component Life Expectancies

Item	Print Life	Reference
Drum Cartridge	65K feeds	PL 8.1
MSI tray feed roller	200k feeds	PL 13.1

Table 1 Component Life Expectancies

Item	Print Life	Reference
Tray 1 feed roller assembly	200k feeds	PL 9.2
Optional tray feed roller	200k feeds	PL 11.1A (B400) and PL 11.1B (B405)
Maintenance Kit	200k feeds or 5 years.	-

HFSI

The High Frequency Service Items are shown in Table 2.

Table 2 High Frequency service items

Item	Description	Recommended Life	Reference
950-824	Transfer Roller	200k feeds	PL 6.1 Item 1
950-804	Fuser Heat Time	13k minutes	PL 7.1 Item 1
950-800	Fuser	200k feeds	PL 7.1 Item 1

SCP 5 Final Actions

Use Final Actions to verify the correct operation of the machine and to complete the service call.

Procedure

Perform the steps that follow. If a fault is identified, go to SCP 3 Fault Analysis:

1. If necessary, re-connect the machine to the customer's network.
2. Perform the relevant maintenance procedures. Refer to SCP 4 Subsystem Maintenance.
3. Ensure that the machine has the latest available software loaded.
4. Operate the machine in all modes. Make the copies and prints from all trays. Use the DADF and the document glass.
5. Make copies and/or prints from all trays. Check the print quality. For image quality defects, perform the IQ1 Image Quality Entry RAP.
6. Make a proof copy or print of a customer document.
7. If some of the customer's selections were changed, return the selections to the customer settings.
8. Mark off the hardware options, software options or Tags installed on the Tag matrix cards.
9. If some changes were made to the configuration or options were added, print the configuration report. Store the configuration report with the machine log book. Discard the previous version of the configuration report.
10. To clear all fault counters, refer to dC125.
11. Log the usage counters. If the usage counters are reset during the call, refer to dC132 Machine ID and Billing Data.
12. If necessary, provide the customer with training.
13. Remove and destroy all copies of test patterns.
14. Ensure the machine and service area are clean.

SCP 6 Machine Features

Configuration Options

The Xerox® VersaLink® B400 and B405 are available as a basic machine with one paper tray and one bypass tray. It is also available in various configurations using the options that follow:

General

For the space requirements, environment range and the print out time. Refer to:

- GP 16 Installation Space Requirements.
- GP 18 Environmental Data.
- GP 20 First Print Out/CopyTime and Startup Time

Paper Supply and Paper Handling Options

- One 550 sheet paper tray (Tray 1).
- 150 sheet bypass tray.
- 60 sheet document feeder (DADF).
- 550 sheet option feeder(s) (3 maximum).

Output

- 250 sheet output tray.

Accessories and Kits

- Wireless Network Adapter.
- 16GB Hard Disk Drive.
- 550 sheet option feeder.
- Foreign Device Interface (FDI) kit.

NOTE: *The service manual covers all of the above configurations. Within the manual, ignore any references to options that are not installed.*

Machine Identification

The diagrams that follow illustrate some of the machine configurations:

- Xerox® VersaLink® B405, Figure 1.
- Xerox® VersaLink® B400, Figure 2.

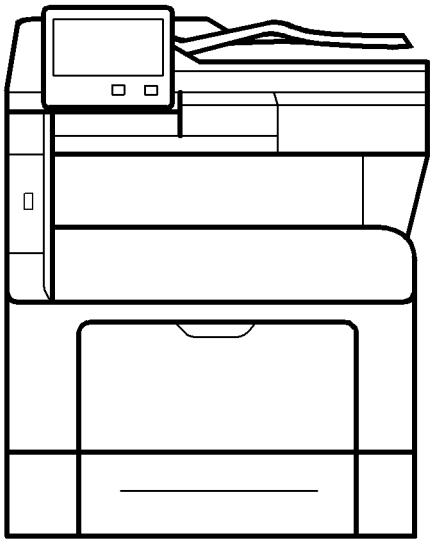

B-1-0304-A

Figure 1 Xerox® VersaLink® B405

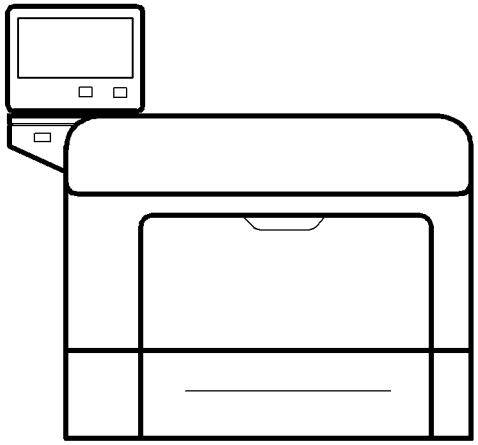

B-1-0303-A

Figure 2 Xerox® VersaLink® B400

2 Status Indicator RAPs

Chain 002

002-500 UI Error RAP 2-11

Chain 003

003-311 IIT CDI I/F Mismatch RAP 2-13
003-318 to 003-319 IIT Software Fail RAP 2-13
003-320 to 003-343 IISS-ESS Communication Fail RAP 2-14
003-344 Hotline Fail RAP 2-15
003-345, 003-346 X PIO Mismatch RAP 2-15
003-700 Returned Documents Error RAP 2-16
003-701 Duplication Prevention Code RAP 2-16
003-702 Different Magnification RAP 2-17
003-703, 003-704 Color Correction RAP 2-17
003-705 Energy Saving Paper Size Mismatch RAP 2-18
003-750 Insufficient Documents Duplex Book RAP 2-18
003-751 Capacity RAP 2-19
003-752, 932, 935 600dpi Cannot be Scanned RAP 2-19
003-753, 930, 933 300dpi Cannot be Scanned RAP 2-20
003-754, 003-755 S2X Error RAP 2-20
003-756 All Originals Blank RAP 2-21
003-757, 931, 934 400dpi Cannot be Scanned RAP 2-21
003-760, 003-761 Scan Settings Error RAP 2-22
003-764 Insufficient Documents RAP 2-22
003-780 Scan Image Compression Error RAP 2-23
003-795 AMS Limit Error RAP 2-23
003-913 Document Size Error RAP 2-24
003-940 Insufficient Memory RAP 2-24
003-941 Insufficient Page Memory RAP 2-25
003-944 Repeat Image Count Fail RAP 2-25
003-946 Image Rotation (Copy APS) RAP 2-26
003-947, 948 Document Error RAP 2-26
003-952 Document Color Mismatch RAP 2-27
003-956 Document Size Auto Detect RAP 2-27
003-963, 965 APS RAP 2-28
003-970, 003-976 Fax Line Memory RAP 2-28
003-972 Maximum Stored Page RAP 2-29
003-973 Image Rotation RAP 2-29
003-974 Next Original Specification RAP 2-30
003-977 Document Mismatch (Multi Scan) RAP 2-30
003-978 Color Document Mismatch (Multi Scan) RAP 2-31

Chain 005

005-121 DADF Jam 2-33
005-211 DADF Motor Fail 2-33
005-305 DADF Feeder Cover Interlock Open RAP 2-34
005-900 DADF Static Jam RAP 2-34
005-940 DADF No Original RAP 2-35
005-941 Not Enough Documents RAP 2-35

Chain 010

010-105 to 010-106 Fuser Exit Sensor Fail RAP 2-37
010-328 Fuser Heat Roll Fail RAP 2-37
010-331 Over Temperature Fail RAP 2-38
010-332 Heat Roll NC Sensor Fail RAP 2-38
010-335 Heat Roll NC Sensor Fail RAP 2-39
010-338 Fuser Heat Roll On Time Fail RAP 2-39
010-398 Rear Fan Failure RAP 2-40
010-344 Fuser Heat Roll Standby Temperature Fail RAP 2-40
010-420 Fuser Near Life Warning RAP 2-41
010-421 Fuser Life Warning RAP 2-41

Chain 016

016-210, 506, 777, 780, 798 HDD Error RAP 2-43
016-211, 016-212 SW Option Fail Memory Low RAP 2-43
016-213 SW Option Fail (Printer Card) RAP 2-44
016-214 SW Option Fail (Fax Card) RAP 2-44
016-215, 016-216 SW Option Fail RAP 2-45
016-217 SW Option Fail (Controller ROM) RAP 2-45
016-218 PS Kit Not Installed for XDOD RAP 2-46
016-219 License Required (Printer Kit) RAP 2-46
016-220 to 016-228, 240 S2X Error RAP 2-47
016-230 License Required (PS Image Log Kit) RAP 2-47
016-232 MRC HW Initialize Error RAP 2-48
016-233 SW Option Fail (USB Host Not Installed) RAP 2-48
016-234 to 016-235 XCP Error RAP 2-49
016-242 System GMT Clock Fail RAP 2-49
016-244 Self-Signed Certificate Auto Update Fail RAP 2-50
016-245, 016-246 Invalid Accessory Mode RAP 2-50
016-310 SSMM Job Log Full RAP 2-51
016-311, 315, 319 Scanner Not Detected RAP 2-51
016-312, 313, 314 SW Option Fail (Hybrid WaterMark) RAP 2-52
016-316, 317, 318, 329, 333, 334 Page Memory Error RAP 2-52
016-320 Document Formatter Error RAP 2-53
016-321 Fax Module Error RAP 2-53
016-322 JBA Account Full RAP 2-54
016-323 B-Formatter Fatal Error RAP 2-54
016-324 Scheduled Image Overwrite RAP 2-55
016-325 Using Personal Certificate RAP 2-55
016-326, 016-607 UI Cable Connection Fail RAP 2-56
016-327, 016-328 Connection Fail RAP 2-56
016-330, 331, 332 Cont System Memory Fail RAP 2-57
016-335 to 016-351 Controller Fail RAP 2-57
016-352 Internal Network Initialize Fail RAP 2-58
016-353, 016-354 IOT-Controller Communication Fail RAP 2-58
016-355, 016-356 Controller ASIC Fail RAP 2-59
016-357 Controller EP Communication Fail RAP 2-59

016-358 Controller Parallel Card Fail RAP 2-60
016-359, 016-361 Controller USB Fail RAP 2-60
016-360, 016-362 Controller UI Fail RAP 2-61
016-363 Controller LyraCard Fail RAP 2-61
016-364, 016-365 Controller USB 2.0 Fail RAP 2-62
016-366, 016-367 Controller HDD Fail RAP 2-62
016-368, 369, 370 Controller Diagnostic Fail RAP 2-63
016-371 Controller USB 1.1 Host Fail RAP 2-63
016-383 Controller OS Communication Fail RAP 2-64
016-400, 402, 427, 429 802.1x Authentication Failure RAP 2-64
016-401 802.1x EAP Type Not Supported RAP 2-65
016-403, 016-430 802.1x Certificate Failure RAP 2-65
016-404, 016-431 802.1x Inside Failure RAP 2-66
016-405 Certificate DB File Error RAP 2-66
016-406 802.1x Client Certificate Failure RAP 2-67
016-407 to 016-412 XCP Error RAP 2-67
016-422, 016-423 Offline RAP 2-68
016-424, 016-425 Power Mode RAP 2-68
016-426 Smart eSolutions Connect Fail RAP 2-69
016-428 802.1x EAP Type Not Supported (Network 2) RAP 2-69
016-432 802.1x Client Certificate Failure (Network 2) RAP 2-70
016-450 SMB Host Name Duplicated RAP 2-70
016-453, 016-454 Dynamic DNS - IPv6 NG RAP 2-71
016-455, 016-456 SNTP Time Out RAP 2-71
016-461 Under Non-transmitted Image Log Stagnation RAP 2-72
016-500, 016-501 ROM Write Error (During DLD Method) RAP 2-72
016-502 ROM Write Error (During PJL Method) RAP 2-73
016-503 SMTP Server Fail for Redirector RAP 2-73
016-504 POP Server Fail for Redirector RAP 2-74
016-505 POP Authentication Fail for Redirector RAP 2-74
016-507, 016-508 Image Log Send Fail RAP 2-75
016-509, 016-510 Image Log No Send Rule RAP 2-75
016-511, 016-512 Image Log Invalid Send Rule RAP 2-76
016-513 SMTP Server Reception Error RAP 2-76
016-514 XPS Error RAP 2-77
016-515 XPS Short of Memory 2-77
016-516 XPS Print Ticket Description Error RAP 2-78
016-517 PS Booklet Illegal Color Mode Change RAP 2-78
016-518 PS Booklet Conflict WM RAP 2-79
016-519 Device DV Limit Reached RAP 2-79
016-520 MRC HW Job Error RAP 2-80
016-521 SmartCard Not Found RAP 2-80
016-522 LDAP SSL Error 112 RAP 2-81
016-523 LDAP SSL Error 113 RAP 2-81
016-524, 016-525 LDAP SSL Error 114 and 115 RAP 2-82
016-526 LDAP SSL Error 116 RAP 2-82
016-527 LDAP SSL Error 117 RAP 2-83
016-528 SmartCard Not Authorized RAP 2-83
016-529 Remote Download Server Timeout RAP 2-84
016-533 Kerberos Attestation Protocol Error 37 RAP 2-84
016-534 Kerberos Attestation Protocol Error 41 and 42 RAP 2-85
016-535 Remote Download File Access Error RAP 2-85
016-536 Host Name Solution Error in Remote Download RAP 2-86
016-537 Remote Download Server Connection Error RAP 2-86
016-538 Remote Download File Write Error RAP 2-87
016-539 Kerberos Attestation Other Protocol Error RAP 2-87
016-543 Attestation Agent Error 543 RAP 2-88
016-545 Attestation Agent Error 545 RAP 2-88
016-546, 558, 569 Attestation Agent Errors RAP 2-89
016-548 Attestation Agent Error 548 RAP 2-89
016-553 Attestation Agent Error 553 RAP 2-90
016-554 Attestation Agent Error 554 RAP 2-90
016-555 Attestation Agent Error 555 RAP 2-91
016-556 Attestation Agent Error 556 RAP 2-91
016-557 Attestation Agent Error 557 RAP 2-92
016-559 Remote Download Parameter Error RAP 2-92
016-560 Attestation Agent Error 560 RAP 2-93
016-562 Detected User Duplication RAP 2-93
016-563 Image Log Memory Full RAP 2-94
016-564 Remote Download Server Authentication Failed RAP 2-94
016-565 Backup Restore Error RAP 2-95
016-566 Backup Restore Condition Error RAP 2-95
016-567 Backup Capacity Full RAP 2-96
016-568 Backup Restore Failed RAP 2-96
016-570 Job Ticket Out of Memory RAP 2-97
016-571 Job Ticket Wrong Parameters RAP 2-97
016-572 Job Ticket Media Error RAP 2-98
016-573 Job Ticket Parse Error RAP 2-98
016-574 FTP Host Name Solution Error RAP 2-99
016-575 FTP DNS Server Error RAP 2-99
016-576 FTP Server Connection Error RAP 2-100
016-577 FTP Service RAP 2-100
016-578 FTP Login Name or Password Error RAP 2-101
016-579 FTP Scanning Picture Preservation Place Error RAP 2-101
016-580 FTP File Name Acquisition Failure RAP 2-102
016-581 FTP File Name Suffix Limit RAP 2-102
016-582, 016-588 FTP File Creation Failure RAP 2-103
016-583, 016-584 FTP Folder Creation Failure RAP 2-103
016-585, 587, 589 FTP File Delete/Read Failure RAP 2-104
016-586 FTP Lock Folder Delete Failure RAP 2-104
016-590 FTP Data Reading Failure RAP 2-105
016-591 FTP Scan Filing Policy RAP 2-105
016-592 FTP DAT File Access Error RAP 2-106
016-593 to 016-596 FTP Error RAP 2-106
016-597 Same File on FTP Server RAP 2-107
016-598, 016-599 Email Message Size RAP 2-107
016-600 KO Authentication Locked RAP 2-108
016-601 Illegal Access Detection RAP 2-108
016-604 Debug Log Created RAP 2-109
016-606, 016-608 Controller Connection Fail RAP 2-109
016-609, 016-610 PCI Option Fail RAP 2-110
016-611 EMMC Card Connection Fail RAP 2-110
016-612 Log Image Creation Failure RAP 2-111
016-700 Password Below Minimum RAP 2-111

016-701 Out of ART EX Memory RAP 2-112
016-702 Out of Page Buffer RAP 2-112
016-703 Email To Invalid Box RAP 2-113
016-704 Mailbox Full RAP 2-113
016-705 Secure Print Fail RAP 2-114
016-706 Maximum User Number Exceeded RAP 2-114
016-707 Sample Print Fail RAP 2-115
016-708 Annotation/Watermark HDD Full RAP 2-115
016-709 ART EX Command Error RAP 2-116
016-710 Delayed Print Fail RAP 2-116
016-711 Email Transmission Size Limit RAP 2-117
016-712 Panther Capacity RAP 2-117
016-713 Security Box Password Error RAP 2-118
016-714 Security Box Not Enabled RAP 2-118
016-715 ESCP Form Invalid Password RAP 2-119
016-716 TIFF Data Overflow RAP 2-119
016-717 Fax Send Result Not Found RAP 2-120
016-718 Out of PCL6 Memory RAP 2-120
016-719 Out of PCL Memory RAP 2-121
016-720 PCL Command Error RAP 2-121
016-721 to 016-724 Settings Error RAP 2-122
016-725 B-Formatter Library Image Conversion Error RAP 2-122
016-726 PDL Auto Switch Fail RAP 2-123
016-727 Unstorable Document RAP 2-123
016-728 Unsupported TIFF Data RAP 2-124
016-729 TIFF Data Size RAP 2-124
016-731, 016-732 Invalid Data RAP 2-125
016-733 Destination Address Resolution Error RAP 2-125
016-735 Updating Job Template RAP 2-126
016-738, 739, 740 Booklet Size RAP 2-126
016-741 Download Mode Fail RAP 2-127
016-742 Download Data Product ID Mismatch RAP 2-127
016-743 Device Model/Panel Type Error RAP 2-128
016-744 Download Data CheckSum Error RAP 2-128
016-745 Download Data XPJL Fatal Error RAP 2-129
016-746, 016-751 Unsupported PDF File RAP 2-129
016-747 Drawing Annotation Memory RAP 2-130
016-748, 774, 775, 778, 981 HDD Full RAP 2-130
016-749 JCL Syntax Error RAP 2-131
016-750 Print Job Ticket Description Error RAP 2-131
016-752 PDF Short of Memory RAP 2-132
016-753 PDF Password Mismatched RAP 2-132
016-755 PDF Print Prohibited RAP 2-133
016-756 Auditron Prohibited Service RAP 2-133
016-757 Auditron Invalid User RAP 2-134
016-758 Auditron Disabled Function RAP 2-134
016-759 Auditron Limit Reached RAP 2-135
016-760 PS Decompose Failure RAP 2-135
016-761 FIFO Empty RAP 2-136
016-762 Print Language Not Installed RAP 2-136
016-763 POP Server Connect RAP 2-137
016-764 SMTP Server Connect RAP 2-137
016-765, 016-766 SMTP Server Error RAP 2-138
016-767 Invalid Email Address RAP 2-138
016-768 Invalid Sender Address RAP 2-139
016-769 SMTP Server Unsupported DSN RAP 2-139
016-770 Direct Fax Function Canceled RAP 2-140
016-772 Scan Data Repository Error RAP 2-140
016-776 Image Conversion Error RAP 2-141
016-779 Scan Image Conversion Error RAP 2-141
016-781 Server Connect Error RAP 2-142
016-786 HDD Full Scan Write Error RAP 2-142
016-788 Retrieve to Browser Failed RAP 2-143
016-790 Email Fragment Over RAP 2-143
016-792 Specified Job Not Found RAP 2-144
016-794 Media Not Inserted RAP 2-144
016-795 Media Reader Format Error RAP 2-145
016-796 Document Insert Operation Error RAP 2-145
016-797 Image File Read Error RAP 2-146
016-799 PLW Print Instruction Fail RAP 2-146
016-910, 016-911 Required Resource Not Ready RAP 2-147
016-940 to 016-949 Incorrect Job Settings RAP 2-147
016-981 HDD Access Error RAP 2-148
016-982 HDD Access Error 2 RAP 2-148
016-983 Image Log HDD Full RAP 2-149
016-985 Scan to Email Data Size RAP 2-149
016A Workflow Scanning Error Entry RAP 2-150

Chain 017

017-500 Job Limit Illegal Response RAP 2-151
017-501 Multiple Permission Restrictions RAP 2-151
017-503 Password Over Maximum RAP 2-152
017-514 Inhibited Version RAP 2-152
017-713 Start TLS Unsupported Fail RAP 2-153
017-714 SMTP Over SSL Fail RAP 2-153
017-715 SSL Certificate Fail RAP 2-154
017-716, 717, 718 SSL Certificate (SMTP) Fail RAP 2-154
017-719 SMTP Over SSL Internal Fail RAP 2-155
017-720, 017-721 PJL Command Fail RAP 2-155
017-722 Total Impressions Over Fail RAP 2-156
017-723 DocuWorks Unsupported Character Fail RAP 2-156
017-725 Forced Annotation Syntax Fail RAP 2-157
017-728 Scan Job Flow Document Fail RAP 2-157
017-729 Temporary Error in PDL Transfer RAP 2-158
017-730 Network Error in PDL Transfer RAP 2-158
017-731 POP Server Not Connected RAP 2-159
017-732 Offline Error in PDL Transfer RAP 2-159
017-733 Internal Error in PDL Transfer RAP 2-160
017-734 IPP Data Error RAP 2-160
017-735 Unauthorized Auditron User RAP 2-161
017-737 Custom Transfer Out of Memory RAP 2-161
017-738, 017-746 HDD Internal Fail RAP 2-162
017-739, 017-740 Transfer Service Not Available RAP 2-162
017-741 Custom Transfer Invalid Plug-In RAP 2-163

017-742, 743, 744 Custom Transfer Plug-In Connection RAP 2-163
017-745 Custom Transfer Plug-in Disk Full RAP 2-164
017-747 Custom Transfer Plug-In Connection Timeout RAP 2-164
017-748 Custom Transfer Plug-In Invalid Device RAP 2-165
017-749 Custom Transfer Plug-In XML Fail RAP 2-165
017-750 Custom Transfer Plug-In Internal Fail RAP 2-166
017-751 Custom Transfer Plug-In Other Fail RAP 2-166
017-755 Software Download Via Network Fail RAP 2-167
017-759 Download Data Inspection Error RAP 2-167
017-760, 017-766 POP Over SSL Fail RAP 2-168
017-761, 017-767 SSL Server Cert Untrusted (POP) RAP 2-168
017-762, 763, 764, 768, 769, 770 SSL Certificate (POP) Fail RAP 2-169
017-765, 017-771 POP Over SSL Internal Fail RAP 2-169
017-772 Scan All Blank Page Fail RAP 2-170
017-773 Netlog Task Error RAP 2-170
017-774 Message Lost Error RAP 2-171
017-775 Network API Error RAP 2-171
017-776, 017-777 Syslog Server Error RAP 2-172
017-778 Queue Error RAP 2-172
017-779 Link Error RAP 2-173
017-780 Held Job Timeout RAP 2-173
017-782, 784, 785, 786 Custom Image Processing Plug-In RAP 2-174
017-783 Custom Image Processing Memory RAP 2-174
017-787 Google Cloud Print Data Error RAP 2-175
017-789 Job Limit Estimation Logic Fail RAP 2-175
017-790 to 017-799 Print Permission RAP 2-176

Chain 018

018-400 IPSEC Configuration Mismatch RAP 2-177
018-405 User Account Disabled RAP 2-177
018-406 Setting Status of IP Address (IPv4) RAP 2-178
018-407 Setting Status of IP Address (IPv6) RAP 2-178
018-408, 429, 430 Duplicate IPv4 Address RAP 2-179
018-409, 412, 413 Duplicate IPv6 Address 1 RAP 2-179
018-410, 018-411 Dynamic DNS Update Failure RAP 2-180
018-414 Invalid IPv6 Address 2 RAP 2-180
018-415 Duplicate IPv6 Address 3 RAP 2-181
018-416 Duplicate IPv6 Address 4 RAP 2-181
018-424, 018-425 WPA Enterprise Certificate Fail 1 RAP 2-182
018-426 WPA Enterprise Certificate Fail 2 RAP 2-182
018-427 Duplicate Wireless Network IP Address Range RAP 2-183
018-428 Wireless Module Connection Fail RAP 2-183
018-431, 432, 433 Duplicate WiFi IPv6 Address 1 RAP 2-184
018-434 Duplicate WiFi IPv6 Address 2 RAP 2-184
018-435 Duplicate WiFi IPv6 Address 3 RAP 2-185
018-436 Duplicate WiFi IPv6 Address 4 RAP 2-185
018-500, 501, 503, 504, 506, 507, 508 CA Server Error RAP 2-186
018-502 SMB Login Failure RAP 2-186
018-505 SMB-DOS Protocol Error RAP 2-187
018-509 Template Parameter Conflict RAP 2-187
018-524 Invalid Device Network Setting RAP 2-188
018-525 HDD full or Access Error RAP 2-188
018-526 to 018-529, 531, 532 CUI Scan Error RAP 2-189
018-530 Authentication Error RAP 2-189
018-543 Shared Name Error in SMB Server RAP 2-190
018-547 SMB Scan Users Restriction RAP 2-190
018-556 HTTP Server Script Error RAP 2-191
018-557 HTTP Invalid Character in Filename RAP 2-191
018-558 HTTP File Not Found RAP 2-192
018-559 HTTP File Duplication Fail RAP 2-192
018-560 to 018-563 HTTP Server Login Fail RAP 2-193
018-564 Host Name Solution Error in HTTP RAP 2-193
018-565 Proxy Name Solution Error in HTTP RAP 2-194
018-566, 018-567 Server Connect Error in HTTP RAP 2-194
018-568 HTTP Server SSL Access Fail RAP 2-195
018-569 HTTP Server Certificate Fail RAP 2-195
018-570 HTTP Certificate Fail RAP 2-196
018-571 Internal Error in Scan RAP 2-196
018-587 File Duplication Fail RAP 2-197
018-588 Scan Filing Policy Invalid RAP 2-197
018-589 NEXTNAME File Error RAP 2-198
018-590 Same Name Exists RAP 2-198
018-591 File Name Suffix Over Limit RAP 2-199
018-592, 018-593 Lock Folder Fail RAP 2-199
018-595 Detected User Duplication RAP 2-200
018-596, 018-700 Network Error RAP 2-200
018-701 to 018-705 LDAP Protocol Errors 01 to 05 RAP 2-201
018-706 LDAP Protocol Error 06 RAP 2-201
018-707, 018-708 LDAP Protocol Errors 07 and 08 RAP 2-202
018-709 Active Communication is Unavailable Now Fail RAP 2-202
018-710 to 018-714 LDAP Protocol Errors 10 to 14 RAP 2-203
018-715 Kerberos Attestation Protocol Error 73 RAP 2-203
018-716 to 018-721 LDAP Protocol Errors 16 to 21 RAP 2-204
018-722 GCP Network Fail RAP 2-204
018-723, 018-740 GCP Certification Fail RAP 2-205
018-724 GCP SSL Connection Fail RAP 2-205
018-725 Kerberos Attestation Protocol Error 22 RAP 2-206
018-726 Kerberos Attestation Protocol Error 70 RAP 2-206
018-727 Kerberos Attestation Protocol Error 71 RAP 2-207
018-728 Kerberos Attestation Protocol Error 72 RAP 2-207
018-729, 730, 738, 739, 743, 744, 745, 746 GCP Network Fail RAP 2-208
018-731 GCP HDD Limit Fail RAP 2-208
018-732 to 018-736 LDAP Protocol Errors 32 to 36 RAP 2-209
018-737, 018-741 GCP Other Fail RAP 2-209
018-747 Server Not Found in SMB RAP 2-210
018-748, 018-750 to 018-754 LDAP Protocol Errors 48, 50 to 36 RAP 2-210
018-749 LDAP Protocol Error 49 RAP 2-211
018-755 Server Connection Error in SMB RAP 2-211
018-756 Server Login Response Timeout in SMB RAP 2-212
018-757 Host Name Solution Error in SMB RAP 2-212
018-758, 018-759 Picture Preservation or File Name Error RAP 2-213
018-760 DFS Link Error in SMB RAP 2-213
018-761 Out of Server Memory in SMB RAP 2-214
018-762 Server Response Timeout in SMB RAP 2-214

018-763 Character Convert Error in SMB RAP 2-215
018-764 to 769, 771 LDAP Protocol Errors 64 to 69 and 71 RAP 2-215
018-770 LDAP Protocol Error 70 RAP 2-216
018-772 Shared Name Not Found in Server RAP 2-216
018-773 Shared Name Error in Server RAP 2-217
018-780 to 018-784 LDAP Protocol Errors 80 and 82 to 84 RAP 2-217
018-781 LDAP Protocol Error 81 RAP 2-218
018-785 LDAP Protocol Error 85 RAP 2-218
018-786 to 797 LDAP Protocol Errors 86 to 97 RAP 2-219

Chain 021

021-210, 211, 212 USB IC Card Reader Error RAP 2-221
021-213 Controller Price Table Error RAP 2-221
021-214 USB IC Card Reader Encryption Setting RAP 2-222
021-215 Invalid Accessory Type Setting RAP 2-222
021-360 EP Accessory Fail RAP 2-223
021-361 EP Accessory Type Configuration Error RAP 2-223
021-401 USB IC Card Reader Connection Error RAP 2-224
021-500 EP Accessory Job Exclusion RAP 2-224
021-501 Invalid URL Detected RAP 2-225
021-502, 503, 504 Couldn't Resolve Proxy Name RAP 2-225
021-505, 021-506 SSL Error RAP 2-226
021-507 Unauthorized Proxy Access RAP 2-226
021-508, 520, 521 Host/Proxy Connection Timed Out RAP 2-227
021-509, 515, 516, 522 Invalid Message Detected RAP 2-227
021-510, 021-511 SOAP Fault RAP 2-228
021-512, 513, 514, 517, 518, 519 Installation Conflict RAP 2-228
021-523 Internal Error RAP 2-229
021-524 to 012-527 Communications Error RAP 2-229
021-528, 021-529 Communication Settings RAP 2-230
021-530, 012-531 Update Server Error RAP 2-230
021-532 to 021-535 Unsupported ROM Set RAP 2-231
021-700 Accessory Failure RAP 2-231
021-701 Accessory Preparing RAP 2-232
021-732, 941, 943, 945 EP Accessory Error RAP 2-232
021-733, 742, 944, 946 EP Accessory Color Error RAP 2-233
021-947, 948, 949 Subtractive Accessory Disable (Scan) RAP 2-233

Chain 023

023-500 UI ROM Download Fail RAP 2-235
023-600, 023-601 UI Key Error RAP 2-235

Chain 024

024-340 to 024-360 IOT-ESS Communication Fail 1 RAP 2-237
024-361 Invalid IOT Paper Size RAP 2-238
024-362, 024-363 Page Sync Illegal Start or Stop RAP 2-238
024-364 DMA Transfer Fail RAP 2-239
024-365 Overflow on Loop Back Write RAP 2-239
024-366 JBIG Library Other Fail RAP 2-240
024-367 Decompress Other Fail RAP 2-240
024-368 PCI Error RAP 2-241
024-370 Marker Code Detection Fail RAP 2-241
024-371 to 024-373, 024-375 IOT-ESS Communication Fail 2 RAP 2-242
024-376 IOT-ESS Communication Fail 3 RAP 2-242
024-600 to 024-614 Counter Repair RAP 2-243
024-615 IOT Unsupported Drum Shut Off RAP 2-243
024-700 Memory Shortage or No EMMC Card RAP 2-244
024-701 Invalid Instruction of Face Inversion RAP 2-244
024-702 Paper Jam RAP 2-245
024-703, 742, 775 Booklet Sheets Count Over RAP 2-245
024-707 Duplex Inversion Prohibited (Duplex) RAP 2-246
024-708 Duplex Inversion Prohibited (Face Down) RAP 2-246
024-746, 024-747 Print Request Failure RAP 2-247
024-748 Bates Numbering Digit Exceeded RAP 2-247
024-910, 946, 959 Tray 1 Size Mismatch RAP 2-248
024-911, 947, 960 Tray 2 Size Mismatch RAP 2-248
024-912, 948, 961 Tray 3 Size Mismatch RAP 2-249
024-913, 949, 962 Tray 4 Size Mismatch RAP 2-249
024-934 Paper Type Mismatch RAP 2-250
024-939 OHP Type Mismatch RAP 2-250
024-942 024-975 Booklet Sheet Count RAP 2-251
024-950 Tray 1 Empty RAP 2-251
024-951 Tray 2 Empty RAP 2-252
024-952 Tray 3 Empty RAP 2-252
024-953 Tray 4 Empty RAP 2-253
024-954, 024-958 Bypass Tray Fault RAP 2-253
024-965, 024-966 ATS/APS RAP 2-254

Chain 025

025-596, 025-597 HDD Diagnostics RAP 2-255

Chain 026

026-400 USB Host Connection Number Exceeded RAP 2-257
026-402 Changed IOT Speed RAP 2-257
026-700 LDAP Protocol Error RAP 2-258
026-701 Address Book Request Overflow RAP 2-258
026-702 Address Book Directory Service Overflow RAP 2-259
026-703 Abort With Logout RAP 2-259
026-704 DocuWorks Error RAP 2-260
026-705 DocuWorks Short of Memory RAP 2-260
026-706, 026-707 DocuWorks Error RAP 2-261
026-708 URL Data Over Size RAP 2-261
026-709 URL HDD Full RAP 2-262
026-710 S/MIME Unsupported Cipher RAP 2-262
026-711 Multi-Page File Size RAP 2-263
026-712 HTTP Out Job Overlap Error RAP 2-263
026-718 PS Print Instruction Fail RAP 2-264
026-719 Internal Error in Scan RAP 2-264
026-720 to 026-723 Media Error RAP 2-265
026-724, 026-725 Remote Download File Error RAP 2-265
026-726 Inconsistent Options RAP 2-266
026-727 Media Filepath Fail RAP 2-266
026-728, 026-729 WSD Scan Error RAP 2-267
026-730 Tray Paper Size Not Detected RAP 2-267

026-731 to 026-733 PJL Fail RAP 2-268
026-734 PJL Diag Mode RAP 2-268
026-739 Waiting Scan Job Deleted RAP 2-269

Chain 027

027-442, 443, 444 Duplicate IP Address 1 RAP 2-271
027-445 Illegal IP Address RAP 2-271
027-446 Duplicate IP Address 2 RAP 2-272
027-447 Duplicate IP Address 3 RAP 2-272
027-452 Duplicate IP Address 4 RAP 2-273
027-500 SMTP Server Fail for Mail IO RAP 2-273
027-501 POP Server Fail for Mail IO RAP 2-274
027-502 POP Authentication Fail for Mail IO RAP 2-274
027-503, 504, 533, 773, 785, 786 Server Communication Timeout RAP 2-275
027-513 SMB Scan Client Access RAP 2-275
027-514 Host Name Solution Error in SMB RAP 2-276
027-515 DNS Server Setup in SMB RAP 2-276
027-516 Server Connection Error in SMB RAP 2-277
027-518 Login Name or Password Error in SMB RAP 2-277
027-519 Scanning Picture Preservation Place Error RAP 2-278
027-520 File Name Acquisition Failure RAP 2-278
027-521 File Name Suffix Limit Over in SMB RAP 2-279
027-522 File Creation Failure in SMB RAP 2-279
027-523 Lock Folder Creation Failure in SMB RAP 2-280
027-524 Folder Creation Failure in SMB RAP 2-280
027-525, 027-527 File Delete Failure in SMB RAP 2-281
027-526 Lock Folder Delete Failure in SMB RAP 2-281
027-528 Data Write Failure to SMB Server RAP 2-282
027-529 Data Read Failure From SMB Server RAP 2-282
027-530 File Name Duplicate Failure in SMB RAP 2-283
027-531 SMB Scan Filing Policy Injustice RAP 2-283
027-532 NEXTNAME File Access Error in SMB RAP 2-284
027-543 SMB Server Name Specification Error RAP 2-284
027-547, 027-548 SMB Protocol Errors 1 RAP 2-285
027-549, 027-572 to 027-576 SMB Protocol Error 4-009 RAP 2-285
027-564 SMB Protocol Error 4-024 RAP 2-286
027-565, 027-578 SMB Protocol Errors 2 RAP 2-286
027-566 SMB Protocol Error 4-026 RAP 2-287
027-569 SMB (TCP/IP) Not Started RAP 2-287
027-584 SMB Protocol Error 4-044 RAP 2-288
027-585 SMB Protocol Error 4-045 RAP 2-288
027-586 SMB Protocol Error 4-046 RAP 2-289
027-587 SMB Protocol Error 4-047 RAP 2-289
027-588, 027-589 SMB Protocol Errors 3 RAP 2-290
027-590 SMB Protocol Error 4-050 RAP 2-290
027-591 SMB Protocol Error 4-051 RAP 2-291
027-600 External Print Check Mode Error RAP 2-291
027-700 Mail Address Domain Error RAP 2-292
027-701 Disconnected Network Cable RAP 2-292
027-702 to 027-709 Certificate for Addresses Error RAP 2-293
027-710 to 027-715 S/MIME Mail Error RAP 2-293
027-716 Unsigned Mail Receipt Was Rejected RAP 2-294
027-717 No MX Record at DNS RAP 2-294
027-720, 027-721 Extension Server Error RAP 2-295
027-722 Extension Server Timeout RAP 2-295
027-723 Extension Server Authentication Fail RAP 2-296
027-724, 725, 726 Extension Server Access Fail RAP 2-296
027-727 Extension Server Parameters RAP 2-297
027-728 Extension Server File Exceeded RAP 2-297
027-730 SMTP Mail Division Error RAP 2-298
027-732 Server Access Error RAP 2-298
027-733 Server SSL Error RAP 2-299
027-734 Server Certificate Error RAP 2-299
027-735 Device SSL Configuration Error RAP 2-300
027-736 Device Certificate Error RAP 2-300
027-737 Template Server Read Error RAP 2-301
027-739 Invalid Template Server Path RAP 2-301
027-740 Template Server Login Error RAP 2-302
027-741 Template Server Connect Fail RAP 2-302
027-742 HDD File System Full RAP 2-303
027-743 Template Server Install Error RAP 2-303
027-744 Template Server Error 1 RAP 2-304
027-745 Template Server Error 2 RAP 2-304
027-746 Job Template Pool Server Not Ready RAP 2-305
027-750 Fax Document Inhibited RAP 2-305
027-751 Job Template Analysis Error RAP 2-306
027-752 Required User Entry Not Entered RAP 2-306
027-753 Job Flow Service Request Disabled RAP 2-307
027-754 Job Flow Service File Signature Mismatch RAP 2-307
027-757 Extension Server SSL Fail RAP 2-308
027-758 System Credential Setting Error RAP 2-308
027-759 Reference Server Connection Error RAP 2-309
027-760 XJT Command Fail RAP 2-309
027-761 Web Print Timeout RAP 2-310
027-762 Illegal Web Print Job Ticket RAP 2-310
027-763 Auditron Cannot Verify User RAP 2-311
027-764 AirPrint Scan Data Transfer Fail RAP 2-311
027-765 Host Name Solution Error in WebDAV RAP 2-312
027-766 Proxy Name Solution Error in WebDAV RAP 2-312
027-767 WebDAV Server SSL Access Fail RAP 2-313
027-768 WebDAV Server Certificate Fail RAP 2-313
027-769 WebDAV Server Access Fail RAP 2-314
027-770 PDL Error RAP 2-314
027-771 DFE Disk Full RAP 2-315
027-772, 774, 776 SMTP Server Error RAP 2-315
027-775 Too Many SMTP Addresses RAP 2-316
027-777 SMTP Server Non Support RAP 2-316
027-778 No Mode Specified by SMTP-AUTH RAP 2-317
027-779 Authentication Failure by SMTP-AUTH RAP 2-317
027-780 WebDAV Network Interface Fail RAP 2-318
027-781 WebDAV Spool Size Over RAP 2-318
027-782 WebDAV Server Redirector Limit RAP 2-319
027-783 WebDAV User Authentication RAP 2-319
027-784 WebDAV Proxy Server Authentication RAP 2-320

027-787 WebDAV File Name Dupulication Fail RAP 2-320
027-788, 027-793 WebDAV Request Fail RAP 2-321
027-789, 791, 795 Access Forbidden RAP 2-321
027-790, 029-792 WebDAV File Not Found RAP 2-322
027-794 WebDAV Server Internal Fail RAP 2-322
027-796 Email Not Printed RAP 2-323
027-797 Invalid Output Destination RAP 2-323
027-798 JFS Target Document Not Found RAP 2-324
027-799 WebDAV Server Insufficient Storage RAP 2-324

Chain 028

028-910 Wrong Fuser Type RAP 2-325

Chain 029

029-700, 029-701 WebDAV Server Response RAP 2-327
029-702 WebDAV Client RAP 2-327
029-703 AirPrint Scan Client RAP 2-328
029-704, 711 Invalid PACFile RAP 2-328
029-705, 706, 709, 712, 713, 716 PACFile Communications RAP 2-329
029-707, 029-708, 714, 715 PACFile Not Found RAP 2-329
029-710, 0129-717 PACFile URL Not Found RAP 2-330

Chain 033

033-310 Fax Charge Function Fail RAP 2-331
033-311 Invalid Address Book Data RAP 2-331
033-312, 033-313, 033-315 to 033-327 Fax Fault RAP 2-332
033-314 Controller and Fax Card ROM Mismatch RAP 2-333
033-328, 329, 340 Failed to Initialize Fax Log RAP 2-333
033-330 to 033-335 FoIP Error RAP 2-334
033-336 Non-mounted Channel RAP 2-334
033-339 Fax 2 Not Responding RAP 2-335
033-363 Fax Card Reset (Reboot) RAP 2-335
033-500 to 033-507 Remote Machine Error RAP 2-336
033-508, 033-511 Destination Polling Error RAP 2-336
033-509 DCS/NSS Resend Exceeded RAP 2-337
033-510 Fallback Error RAP 2-337
033-512, 513, 518, 519, 520, 534 Remote Machine Function RAP 2-338
033-514, 516, 517, 521, 522, 033-526 to 033-529 Remote Machine Error 1 RAP 2-338
033-523, 524, 525, 542, 546, 574 Line Not Connected RAP 2-339
033-530 DTMF Illegal Procedure RAP 2-339
033-531, 532, 533, 544, 552, 578 Remote Machine Error 2 RAP 2-340
033-535 DCN Receive at Phase B Send RAP 2-340
033-536 to 033-540, 568, 575, 577 Send/Receive Error RAP 2-341
033-541, 033-566 No Destination Specified RAP 2-341
033-543, 567, 576, 702, 703 Dial Error RAP 2-342
033-545 T0 Timeout RAP 2-342
033-547 Abort During Transmission RAP 2-343
033-548 No Manual Send Line RAP 2-343
033-549, 551, 583 Fax Service Disabled RAP 2-344
033-550 Cannot Disable Fax Service RAP 2-344
033-553 No Folder/Relay RAP 2-345
033-554 Wrong Password/Receive Banned RAP 2-345
033-555, 033-556 Incorrect Password RAP 2-346
033-557, 033-565 Destinations or Services Exceeded RAP 2-346
033-558, 033-559 Remote ID Rejection RAP 2-347
033-560, 561, 562 TRESS/RCC RAP 2-347
033-563, 033-569 No Printable Paper Size RAP 2-348
033-564, 033-570 Power Off During Transmission RAP 2-348
033-571, 033-588 Manual Send Job Cancelled RAP 2-349
033-572 Fax Report Print Job Cancelled RAP 2-349
033-573 Domain Regulation Check Error RAP 2-350
033-580 Missing VoIP Gateway RAP 2-350
033-581 Access Authentication Failure RAP 2-351
033-582 Mismatched Ability RAP 2-351
033-584 SIP Request Timeout RAP 2-352
033-585 SIP Request Error RAP 2-352
033-586 T38 Protocol Not Ready RAP 2-353
033-587, 589, 590, 592 Remote Machine Error 3 RAP 2-353
033-591 FoIP Max Sessions Over RAP 2-354
033-593 Cancelled By Remote Peer RAP 2-354
033-700 T1 Timeout Fail RAP 2-355
033-701 Retry Timeout RAP 2-355
033-710, 712, 713, 717, 718, 719, 721 Document Not Found RAP 2-356
033-716 No Specified Folder RAP 2-356
033-724 Fax Receive Memory Over Flow RAP 2-357
033-725, 033-742 Insufficient Hard Disk Space RAP 2-357
033-726, 728, 734, 737, 738, 751 Fax Printing Error RAP 2-358
033-731, 732, 736, 740, 747, 749 Inconsistent Instructions RAP 2-358
033-733, 735, 741, 743, 744, 745, 746, 750 Fax Document Number Error RAP 2-359

Chain 041 - 045

041-310 IM Logic Fail RAP 2-361
041-340 MCU NVM (EEPROM) Fail RAP 2-361
042-348 Drive Over Temperature Detect Fail RAP 2-362
042-398 LVPS Fan Fail RAP 2-362
045-310 Image Ready RAP 2-363
045-311 Controller Communication Fail RAP 2-363

Chain 050 to 059

050-596 Jam Zone IOT 3 RAP 2-365
058-315 to 058-316, 059-314 to 059-315, 059-324, 059-326 Fuser Checkout RAP 2-365

Chain 062

062-311, 062-313 to 062-314, 062-318 IIT Software Logic Fail RAP 2-367
062-345 IIT EEPROM Fail RAP 2-367
062-360, 062-389 Carriage Position Fail RAP 2-368
062-362 X Hard Fail RAP 2-368
062-380, 386 Lamp Illumination Fail RAP 2-369
062-790 Recognition Fail RAP 2-369

Chain 071 - 077

071-101 Tray 1 Misfeed RAP 2-371
072-101 Tray 2 Misfeed RAP 2-371
072-310 to 072-311 Tray 2 Fail RAP 2-372
075-100 Bypass Tray (MSI) Jam RAP 2-372

077-101, 077-104 Registration/Exit Sensor Jam RAP 2-373
077-117 Tray 2 Registration Sensor Jam RAP 2-373
077-119 Image Formation Fail Jam RAP 2-374
077-123 Registration Sensor Jam (Duplex) RAP 2-374
077-300 Front Cover Open RAP 2-375
077-322 Option Tray Communication Fail RAP 2-375
077-327 Invalid Option Feeder RAP 2-376
077-909 IOT Static Jam RAP 2-376
077-911, 077-967 to 077-968 Paper Mismatch RAP 2-377

Chain 091 - 099

091-300 Rear Cover Interlock Open RAP 2-379
091-401, 091-406 Drum Cartridge Near End of Life RAP 2-379
091-402, 091-913 Drum Cartridge End of Life RAP 2-380
091-914 to 091-915 Drum Cartridge CRUM Data Error RAP 2-380
091-916 Drum Cartridge CRUM Authentication Error RAP 2-381
091-921 Toner Cartridge CRUM Communication Error RAP 2-381
092-321 ADC K Patch Fail RAP 2-382
093-406 Toner Cartridge Near End of Life RAP 2-382
093-335, 093-339, 093-916 Toner CRUM Communication Error RAP 2-383
093-444, 093-912 Toner Cartridge Empty RAP 2-383
093-916 Toner CRUM Not Readable RAP 2-384
093-924 to 093-925 Drum CRUM Data Failure RAP 2-384
093-926 Toner CRUM Authentication Fail RAP 2-385
096-918 3rd Party Toner CRUM Detected RAP 2-385
099-396 to 099-399 Fuser Temperature Fault RAP 2-386

Chain 102

102-311 to 102-319 USB Dongle Errors RAP 2-387
102-356 EWS Soft Fail RAP 2-387

Chain 103

103-310 to 103-313 Hybrid Water Mark RAP 2-389
103-314 Prohibited Originals RAP 2-389

Chain 116

116-210, 116-211 Media Reader Error RAP 2-391
116-212, 116-220, 116-310 to 116-311 ESS Error RAP 2-391
116-312, 116-313 HDD Encrypt Key Fail RAP 2-392
116-314 Ethernet Address Fail RAP 2-392
116-319 Controller and UI Configuration RAP 2-393
116-320, 116-345 Process Error RAP 2-393
116-321, 322, 328, 329, 338 Software Error RAP 2-394
116-323 ESS NVRAM W/R Check Fail RAP 2-394
116-324 Exception Fail RAP 2-395
116-325 ESS Fan Fail RAP 2-395
116-330, 331, 336, 337, 339 HDD File System Fail RAP 2-396
116-334 ESS NVRAM Data Compare Fail 2-396
116-340 Not Enough Memory RAP 2-397
116-341, 342, 393, 394 ROM Version Incorrect RAP 2-397
116-343, 346, 357, 359 Main PWB Error RAP 2-398
116-348, 349, 358, 360, 374 Redirecter Fail RAP 2-398
116-353, 354, 356, 361, 362 HDD Fail RAP 2-399
116-355 Agent Soft Fail RAP 2-399
116-363, 367, 370, 373, 376 Fatal Error RAP 2-400
116-364, 365, 366, 368, 371, 372, 375, 377 Timer Fail RAP 2-400
116-378, 379, 395 MCR/MCC Soft Fail RAP 2-401
116-380 ESS Font ROM DIMM #1 Check Fail RAP 2-401
116-381 ABL Version Fail RAP 2-402
116-382 ABL Initialize Fail RAP 2-402
116-383 PIT Lib Failure RAP 2-403
116-384, 385, 387, 389 DCS/IDC Software Fail RAP 2-403
116-386 Fax USB Port RAP 2-404
116-388 No HDD RAP 2-404
116-390 ROM and NVM Version Mismatch RAP 2-405
116-391 Illegal Code RAP 2-405
116-392 Machine Code Check Fail RAP 2-406
116-396 FIPS140 Self Test Fail RAP 2-406
116-397 Illegal Setting Area Coverage Threshold RAP 2-407
116-399 Initialization RAP 2-407
116-701, 116-710 Out of Memory Duplex Fail RAP 2-408
116-702 Print with Substitute Font RAP 2-408
116-703 Postscript Language RAP 2-409
116-704 Media Reader RAP 2-409
116-705 to 116-709, 716, 717 Media Reader Format RAP 2-410
116-713, 116-751 HDD Full RAP 2-410
116-714 HP-GL/2 Command Error RAP 2-411
116-719 XPIF Parameter Cancelled RAP 2-411
116-720 PCL Memory Low Page Simplified RAP 2-412
116-721 to 116-724, 726, 727, 728 Color Print Permissions RAP 2-412
116-725 HDD Image Log Full RAP 2-413
116-738 Size/Orientation Mismatch RAP 2-413
116-739, 741, 742, 743 Out of Disk Area RAP 2-414
116-740 Arithmetic Error RAP 2-414
116-746 Selected Form Not Registered RAP 2-415
116-747, 116-748 Invalid Page Data RAP 2-415
116-749 PostScript Font Error RAP 2-416
116-750 Banner Sheet Cancelled RAP 2-416
116-752 Print Job Ticket RAP 2-417
116-771 to 116-780 Invalid JBIG Parameter RAP 2-417

Chain 117

117-310 WSD Scan S/W Fail RAP 2-419
117-311 Incorrect Installation of Security Enhancement Kit RAP 2-419
117-312 Device Self Test Error RAP 2-420
117-313, 117-314 Geographic Region Change Fail RAP 2-420
117-315 Contract Type/Geographic Region Changed RAP 2-421
117-316 Contract Manager Software Fail RAP 2-421
117-317, 117-318 Contract Manager PPP RAP 2-422
117-319 EMMC Card Program or Font Data Access RAP 2-422
117-320 to 117-324, 327, 329, 338 EMMC Card Fail RAP 2-423
117-325, 117-326 Access Fail RAP 2-423
117-330 XBDS Soft Fail RAP 2-424
117-331, 117-355 Uninitialized HDD RAP 2-424
117-332, 117-335 Uninitialized Used NVM RAP 2-425

117-333 Uninitialized Used EMMC Card RAP 2-425
117-336, 117-337 PCI Not Supported Fail RAP 2-426
117-339 NVM Backup Fail RAP 2-426
117-340, 117-342 Other HDD Fail RAP 2-427
117-343 Log Sending Parameter Fail RAP 2-427
117-344 Invalid User Job Type Fail RAP 2-428
117-345 SSMM Batch Setting Duration Fail RAP 2-428
117-347, 349, 350 Service Fail RAP 2-429
117-348 Uninitialized Used EMMC Card RAP 2-429
117-354, 356, 358 Job Limit System Fail RAP 2-430
117-360 Date Limit Exceeding Fail RAP 2-430
117-362, 117-363 USB Dongle Fail RAP 2-431
117-364 Encryption Key Fail RAP 2-431
117-365 WiFi Diagnostic Fail RAP 2-432

Chain 118

118-310, 118-311 Internal Fail RAP 2-433

Chain 121

121-310, 327 EPSV-Accessory Communication Fail RAP 2-435
121-311, 312, 313 IC Card Auditron Password Fail RAP 2-435
121-314 Customize User Prompts Fail RAP 2-436
121-316 Accessory Conflict RAP 2-436
121-317 Continuous Job Setting Mismatch RAP 2-437
121-318 Auth/Account Settings Not Supported RAP 2-437
121-319 Fax Send Charging and Internet Fax Setting Confliction RAP 2-438
121-322 Controller Price Table Error RAP 2-438
121-323 Web EP Software Fail RAP 2-439
121-324 Fax Send Charging Confliction RAP 2-439
121-325 ICCR and Panel Setting Confliction RAP 2-440
121-328 to 121-332, 341, 342, 343 EP Communication Fail RAP 2-440
121-339 Price Table Error RAP 2-441
121-340 EP Accessory MisMatch RAP 2-441

Chain 123

123-310 to 123-353 UI Error 1 RAP 2-443
123-354 to 123-381 UI Error 2 RAP 2-443
123-382 to 123-399 UI Error 3 RAP 2-444

Chain 124

124-310, 311, 314, 316, 318, 322, 324, 340 344, 360 DC132 Error RAP 2-445
124-312, 313, 356, 357 DC132 Error 10 and 12 RAP 2-445
124-315, 317, 355 DC132 Error 02, 04 and 14 RAP 2-446
124-319 DC132 Error 08 RAP 2-446
124-320 SEEPROM Fail RAP 2-447
124-321 Backup SRAM Fail RAP 2-447
124-323 DC132 06 RAP 2-448
124-325 Billing Restoration Fail RAP 2-448
124-326 IOT Speed Not Registered RAP 2-449
124-327 IOT Speed Change Fail RAP 2-449
124-328 Punch Unit User Initial Set Up RAP 2-450
124-331 to 124-339 ESS ROM DIMM RAP 2-450
124-341, 351, 361, 381, 391 CRUM Market Fail MCU RAP 2-451
124-342, 343, 352, 353, 362, 363, 382, 383, 392, 393 CRUM Market Fail SYS 1 RAP . 2-451
124-344, 346, 348 Information Mismatch RAP 2-452
124-345 Billing Meter Type Restoration Fail RAP 2-453
124-347 Billing CountType Restoration Fail RAP 2-453
124-349 Modal Break Point Restoration Fail RAP 2-454
124-350, 354, 380, 390 CRUM OEM Fail RAP 2-454
124-372, 373, 374 IOT Soft Fail RAP 2-455

Chain 127

127-310 to 127-315, 342 ESS Error RAP 2-457
127-337 Job Template HDD Write Error RAP 2-457
127-353 to 127-399 Fatal Error RAP 2-458
127-700 SIP Registration Fail RAP 2-458

Chain 133

133-210 to 133-217 Fax Parameter Incorrect RAP 2-459
133-218 Fax Card Message Memory RAP 2-459
133-219 to 133-223 Fax Card Error 1 RAP 2-460
133-224 Controller ROM Fax Card ROM Mismatch RAP 2-460
133-226 Illegal Country RAP 2-461
133-280 to 133-283 Fax Card Error 2 RAP 2-461
133-701 Replacement Character Detected RAP 2-462
133-710 Tray Select Fail RAP 2-462

Chain 500

500-030 DC612 IOT Wait State RAP 2-463
500-033, 500-035 Diagnostic Documents RAP 2-463
500-990 DC612 Print Error RAP 2-464

Other Faults

OF 1 Unusual Noises RAP 2-465
OF 2 POST Error RAP 2-466
OF 3 Special Boot Modes RAP 2-472

002-500 UI Error RAP

002-500 CUI scan panel UI detection error.

Procedure

WARNING

Ensure that the electricity to the machine is switched off while performing tasks that do not need electricity. Refer to GP 10. Disconnect the power cord. Electricity can cause death or injury. Moving parts can cause injury.

Perform the steps that follow:

1. Switch off, then switch on the machine, GP 10.
2. Ensure that all connectors on the UI assembly, PL 1.1A (B400) or PL 1.1B (B405), and the ESS PWB, PL 18.1A Item 5 (B405) or PL 18.1B Item 5 (B405) are connected securely. Ensure that all surface-mounted modules on the ESS PWB are connected securely.
3. Check the wiring between the ESS PWB and the UI assembly.
4. Upgrade the software, GP 4.
5. Perform GP 25, Function 03. NVRAM INIT MODE.

CAUTION

When installing a new ESS PWB and a new MCU PWB at the same time, first install the new ESS PWB, by following REP 18.1 (B405), REP 18.2 (B400). If the new ESS PWB installation is successful, switch off the machine, GP 10. Then, install the new MCU PWB.

6. If the fault persists, install the new components as necessary:
   - UI assembly, PL 1.1A (B400) or PL 1.1B (B405).
   - ESS PWB, PL 18.1A Item 5 (B400) or PL 18.1B Item 5 (B405).
   - MCU PWB, PL 18.2 Item 2.

   NOTE: *If the fault persists after startup, perform dC132 to verify all numbers match. Go to Serial Number Re-Synchronization in GSN (Library 1503).*

003-311 IIT CDI I/F Mismatch RAP

003-311 During controller initialization, the IIT CDI I/F has insufficient information from the IIT.

Procedure

Upgrade the software, GP 4.

003-318 to 003-319 IIT Software Fail RAP

003-318 IIT software is corrupt.

003-318 Video driver detection fail.

Procedure

WARNING

Ensure that the electricity to the machine is switched off while performing tasks that do not need electricity. Refer to GP 10. Disconnect the power cord. Electricity can cause death or injury. Moving parts can cause injury.

Perform the steps that follow:

1. Switch off, then switch on the machine, GP 10.
2. Perform OF 3 Special Boot Modes RAP.
3. Ensure that all connectors on the IIT assembly, PL 21.1 Item 14 and the ESS PWB, PL 18.1A Item 5 (B400) or PL 18.1B Item 5 (B405), are connected securely. Ensure that all surface-mounted modules on the ESS PWB are connected securely.
4. Upgrade the software, GP 4.
5. Perform GP 25, Function 03. NVRAM INIT MODE.

CAUTION

When installing a new ESS PWB and a new MCU PWB at the same time, first install the new ESS PWB, by following REP 18.1 (B405), REP 18.2 (B400). If the new ESS PWB installation is successful, switch off the machine, GP 10. Then, install the new MCU PWB.

6. If the fault persists, install a new:
   - ESS PWB, PL 18.1A Item 5 (B400) or PL 18.1B Item 5 (B405).
   - MCU PWB, PL 18.2 Item 2.

   NOTE: *If the fault persists after startup, perform dC132 to verify all numbers match. Go to Serial Number Re-Synchronization in GSN (Library 1503).*

003-320 to 003-343 IISS-ESS Communication Fail RAP

003-320 IISS sending error detected by the controller. An abnormal parameter is set as the argument for the send function.

003-321 IISS sending error detected by the controller. After commands were sent twice from the controller, the controller could not receive acknowledgment from the IISS.

003-322 IISS sending error detected by the controller. After commands were sent twice from the controller, the controller could not receive acknowledgment from the IISS.

003-323 IISS sending error detected by the controller. After commands were sent twice from the controller, the controller could not receive acknowledgment from the IISS.

003-324 IISS sending error detected by the controller. After commands were sent twice from the controller, the controller could not receive acknowledgment from the IISS.

003-325 IISS sending error detected by the controller. After commands were sent twice from the controller, the controller could not receive acknowledgment from the IISS.

003-326 IISS sending error detected by the controller. After commands were sent twice from the controller, the controller could not receive acknowledgment from the IISS.

003-327 IISS sending error detected by the controller. After commands were sent twice from the controller, the controller could not receive acknowledgment from the IISS.

003-328 IISS sending error detected by the controller. After commands were sent twice from the controller, the controller could not receive acknowledgment from the IISS.

003-329 IISS receiving error detected by the controller. The NAK that notifies of the occurrence of a transmission failure is received.

003-330 IISS receiving error detected by the controller. The NAK that notifies of the occurrence of a transmission failure is received.

003-331 IISS receiving error detected by the controller. The NAK that notifies of the occurrence of a transmission failure is received.

003-332 IISS receiving error detected by the controller. The NAK that notifies of the occurrence of a transmission failure is received.

003-333 IISS receiving error detected by the controller. The NAK that notifies of the occurrence of a transmission failure is received.

003-334 IISS receiving error detected by the controller. The NAK that notifies of the occurrence of a transmission failure is received.

003-335 IISS receiving error detected by the controller. The NAK that notifies of the occurrence of a transmission failure is received.

003-336 IISS receiving error detected by the controller. The NAK that notifies of the occurrence of a transmission failure is received.

003-337 There was no response to the power on command sent to the IISS after restoring from power saver mode.

003-338 Incorrect argument error for sending.

003-339 Transmission establishing error for sending.

003-340 Synchronous send error.

003-341 Transmission error for sending.

003-342 Incorrect argument error for receiving.

003-343 Synchronous receive error.

Procedure

WARNING

Ensure that the electricity to the machine is switched off while performing tasks that do not need electricity. Refer to GP 10. Disconnect the power cord. Electricity can cause death or injury. Moving parts can cause injury.

Perform the steps that follow:

1. Switch off, then switch on the machine, GP 10.
2. Perform OF 3 Special Boot Modes RAP.
3. Ensure that all connectors on the IIT assembly, PL 21.1 Item 14 and the ESS PWB, PL 18.1A Item 5 (B400) or PL 18.1B Item 5 (B405), are connected securely. Ensure that all surface-mounted modules on the ESS PWB are connected securely.
4. Upgrade the software, GP 4.
5. Perform GP 25, Function 03. NVRAM INIT MODE.

CAUTION

When installing a new ESS PWB and a new MCU PWB at the same time, first install the new ESS PWB, by following REP 18.1 (B405), REP 18.2 (B400). If the new ESS PWB installation is successful, switch off the machine, GP 10. Then, install the new MCU PWB.

6. If the fault persists, install a new:
   - ESS PWB, PL 18.1A Item 5 (B400) or PL 18.1B Item 5 (B405).
   - MCU PWB, PL 18.2 Item 2.

   NOTE: *If the fault persists after startup, perform dC132 to verify all numbers match. Go to Serial Number Re-Synchronization in GSN (Library 1503).*

003-344 Hotline Fail RAP

003-344 Hotline failure during power on.

Procedure

WARNING

Ensure that the electricity to the machine is switched off while performing tasks that do not need electricity. Refer to GP 10. Disconnect the power cord. Electricity can cause death or injury. Moving parts can cause injury.

Perform the steps that follow:

1. Switch off, then switch on the machine, GP 10.
2. Perform OF 3 Special Boot Modes RAP.
3. Ensure that all connectors on the IIT assembly, PL 21.1 Item 14 and the ESS PWB, PL 18.1A Item 5 (B400) or PL 18.1B Item 5 (B405), are securely connected. Ensure all surface mounted modules on the ESS PWB are securely connected.
4. Upgrade the software, GP 4.
5. Perform GP 25, Function 03. NVRAM INIT MODE.

CAUTION

When installing a new ESS PWB and a new MCU PWB at the same time, first install the new ESS PWB, by following REP 18.1 (B405), REP 18.2 (B400). If the new ESS PWB installation is successful, switch off the machine, GP 10. Then, install the new MCU PWB.

6. If the fault persists, install a new:
   - ESS PWB, PL 18.1A Item 5 (B400) or PL 18.1B Item 5 (B405).
   - MCU PW, PL 18.2 Item 2.

   NOTE: *If the fault persists after startup, perform dC132 to verify all numbers match. Go to Serial Number Re-Synchronization in GSN (Library 1503).*

003-345, 003-346 X PIO Mismatch RAP

003-345 When a job fail was received from the IISS, an error of the X hot line was detected.

003-345 When IIT image delivered was received from the IISS, an error of the X hot line was detected.

Procedure

WARNING

Ensure that the electricity to the machine is switched off while performing tasks that do not need electricity. Refer to GP 10. Disconnect the power cord. Electricity can cause death or injury. Moving parts can cause injury.

Perform the steps that follow:

1. Switch off, then switch on the machine, GP 10.
2. Perform OF 3 Special Boot Modes RAP.
3. Ensure that all connectors on the IIT assembly, PL 21.1 Item 14 and the ESS PWB, PL 18.1A Item 5 (B400) or PL 18.1B Item 5 (B405), are securely connected. Ensure all surface mounted modules on the ESS PWB are securely connected.
4. Upgrade the software, GP 4.
5. Perform GP 25, Function 03. NVRAM INIT MODE.

CAUTION

When installing a new ESS PWB and a new MCU PWB at the same time, first install the new ESS PWB, by following REP 18.1 (B405), REP 18.2 (B400). If the new ESS PWB installation is successful, switch off the machine, GP 10. Then, install the new MCU PWB.

6. If the fault persists, install a new:
   - ESS PWB, PL 18.1A Item 5 (B400) or PL 18.1B Item 5 (B405).
   - MCU PW, PL 18.2 Item 2.

   NOTE: *If the fault persists after startup, perform dC132 to verify all numbers match. Go to Serial Number Re-Synchronization in GSN (Library 1503).*

003-700 Returned Documents Error RAP

003-700 When the originals are ejected, the number of ejected originals is more than the number that were fed.

Procedure

Reload the originals, then re-run the job.

003-701 Duplication Prevention Code RAP

003-701 A copy restriction code is detected in the document data.

Procedure

Perform the steps that follow:

1. Advise the customer not to attempt to copy documents that are restricted.
2. If the fault persists, upgrade the software, GP 4.

003-702 Different Magnification RAP

003-702 Different magnification settings, for side 1 and side 2 of a document.

Procedure

Perform the steps that follow:

1. Advise the customer to correct the magnification settings.
2. If the fault persists, upgrade the software, GP 4.

003-703, 003-704 Color Correction RAP

003-703 Color correction patch position error during 2 sided simultaneous scan.

003-704 Color correction color difference error during 2 sided simultaneous scan.

Procedure

Perform the steps that follow:

1. Advise the customer to load the 2 sided simultaneous scan correction chart correctly.
2. If the fault persists, upgrade the software, GP 4.

003-705 Energy Saving Paper Size Mismatch RAP

003-705 A paper size mismatch error was detected when exiting energy saver mode.

Procedure

Perform the steps that follow:

1. Advise the customer to cancel the job, then retry the job.
2. If the fault persists, upgrade the software, GP 4.

003-750 Insufficient Documents Duplex Book RAP

003-750 The number of documents is insufficient for duplex book print.

Procedure

Perform the steps that follow:

1. Advise the customer to change the parameters, then retry the job.
2. If the fault persists, upgrade the software, GP 4.

003-751 Capacity RAP

003-751 An attempt to process image data of a size smaller than the one that can be processed according to the document area settings and the scan area was detected.

Procedure

Perform the steps that follow:

1. Advise the customer to increase the resolution or enlarge the scan area (width x length), then retry the job.
2. If the fault persists, upgrade the software, GP 4.

003-752, 932, 935 600dpi Cannot be Scanned RAP

003-752 600dpi is unavailable for DADF mixed 2-sided mode scan.

003-932 For scanning in the DADF mix duplex mode, 600dpi is not available.

003-935 For scanning in the DADF mix duplex mode, 600dpi is not available (when the next document exists).

Procedure

Perform the steps that follow:

1. Advise the customer to perform scanning below 400 dpi resolution.
2. If the fault persists, upgrade the software, GP 4.

003-753, 930, 933 300dpi Cannot be Scanned RAP

003-753 300/400/600dpi unavailable for DADF mixed 2-sided mode scan.

003-930 For scanning in the DADF mix duplex mode, 300dpi, 400dpi and 600dpi are not available.

003-933 For scanning in the DADF mix duplex mode, 300dpi, 400dpi and 600dpi are not available (when the next document exists).

Procedure

Perform the steps that follow:

1. Advise the customer to perform scanning below 200 dpi resolution or perform scanning in other than mixed mode.
2. If the fault persists, upgrade the software, GP 4.

003-754, 003-755 S2X Error RAP

003-754 A recoverable error was detected.

003-755 Command error returned from the PWB.

Procedure

Perform the steps that follow:

1. Advise the customer to cancel the job, then retry the job.
2. If the fault persists, upgrade the software, GP 4.

003-756 All Originals Blank RAP

003-756 All scanned documents were detected as blank.

Procedure

Perform the steps that follow:

1. Advise the customer to ensure all documents are not blank and are inserted in the correct orientation, then retry the job.
2. If the fault persists, upgrade the software, GP 4.

003-757, 931, 934 400dpi Cannot be Scanned RAP

003-757 400/600dpi unavailable for DADF mixed 2-sided mode scan.

003-931 For scanning in the DADF mix duplex mode, 400dpi and 600dpi are not available.

003-934 For scanning in the DADF mix duplex mode, 400dpi and 600dpi are not available (when the next document exists).

Procedure

Perform the steps that follow:

1. Advise the customer to perform scanning below 300 dpi resolution or perform scanning in other than mixed mode.
2. If the fault persists, upgrade the software, GP 4.

003-760, 003-761 Scan Settings Error RAP

003-760 The job properties are incorrect.

003-761 Tray selection error.

Procedure

Perform the steps that follow:

1. Advise the customer to correct the job properties.
2. If the fault persists, upgrade the software, GP 4.

003-764 Insufficient Documents RAP

003-764 Insufficient documents for image overlay.

Procedure

Perform the steps that follow:

1. Advise the customer to correct the job properties.
2. If the fault persists, upgrade the software, GP 4.

003-780 Scan Image Compression Error RAP

003-765 Fax scan compression error.

Procedure

Perform the steps that follow:

1. Advise the customer to cancel the job then to change the scan resolution parameter and then retry the job.
2. If the fault persists, upgrade the software, GP 4.

003-795 AMS Limit Error RAP

003-795 AMS (auto reduce/enlarge) limit error.

Procedure

Perform the steps that follow:

1. Advise the customer to cancel the job then to change the job properties.
2. If the fault persists, upgrade the software, GP 4.

003-913 Document Size Error RAP

003-913 Insufficient memory to store the selected document size and resolution detected.

Procedure

Perform the steps that follow:

1. Advise the customer to cancel the job, then to change the scan resolution or document size parameters and retry the job.
2. If the fault persists, upgrade the software, GP 4.

003-940 Insufficient Memory RAP

003-940 Insufficient DAM memory detected.

Procedure

Perform the steps that follow:

1. Advise the customer to cancel the job then to clear the B/W setting for color mode or the side 2 cover image setting, then retry the job.
2. If the fault persists, upgrade the software, GP 4.

003-941 Insufficient Page Memory RAP

003-941 Insufficient page memory to store the image detected.

Procedure

Perform the steps that follow:

1. Advise the customer to change the job parameters, then retry the job.
2. Ensure the HDD, PL 18.1A Item 91 (B400) or PL 18.1B Item 91 (B405), is installed correctly.
3. If the fault persists, upgrade the software, GP 4.

003-944 Repeat Image Count Fail RAP

003-944 Incorrect image repeat count (not even one image can be pasted).

Procedure

Perform the steps that follow:

1. Advise the customer to change the image repeat count parameter, then retry the job.
2. If the fault persists, upgrade the software, GP 4.

003-946 Image Rotation (Copy APS) RAP

003-946 Part of the image will be lost if the image is not rotated. However, a paper size that does not support rotation was selected.

Procedure

Perform the steps that follow:

1. Advise the customer to manually select an appropriate paper tray, then retry the job.
2. If the fault persists, upgrade the software, GP 4.

003-947, 948 Document Error RAP

003-947 An additional number of documents are required.

003-948 Returned document size mismatch.

Procedure

Perform the steps that follow:

1. Advise the customer to reload the correct number and size of documents, and to correctly program the job on the UI. Retry the job.
2. If the fault persists, upgrade the software, GP 4.

003-952 Document Color Mismatch RAP

003-952 Returned document color mismatch (different color detected before/after return).

Procedure

Perform the steps that follow:

1. Advise the customer to reload the correct color documents and to correctly program the job. Retry the job.
2. If the fault persists, upgrade the software, GP 4.

003-956 Document Size Auto Detect RAP

003-956 Undefined document size was detected when platen is selected and only APS requires document size selection.

Procedure

Perform the steps that follow:

1. Advise the customer to input an appropriate value for the document size, then retry the job.

003-963, 965 APS RAP

003-963 No APS compatible tray to set the relevant size.

003-965 There was no paper in the tray that can be selected for APS.

Procedure

Perform the steps that follow:

1. Advise the customer to select a tray that has the correct size of paper, then retry the job.
2. If the fault persists, upgrade the software, GP 4.

003-970, 003-976 Fax Line Memory RAP

003-970 The number of slow-scan lines has exceeded the upper limit due to Fax parallel composition, long- document enlargement, etc.

003-976 Number of lines in the slow scan direction exceeded during Fax N-up.

Procedure

Perform the steps that follow:

1. Advise the customer to touch continue to store as much data as the memory capacity will allow, then continue scanning the next document. Otherwise, cancel the job.
2. Switch off, then switch on the machine, GP 10.
3. Ensure the option HDD, PL 18.1A Item 91 (B400) or PL 18.1B Item 91 (B405), is installed correctly.
4. If the fault persists, upgrade the software, GP 4.

003-972 Maximum Stored Page RAP

003-972 When scanning a document, the number of pages that has accumulated in the machine has exceeded the value of ‘Maximum Stored Number of Copy Sheets’ set in system data.

Procedure

Perform the steps that follow:

1. Advise the customer to set the number of pages of the document to be within the maximum number of pages that can be stored.
2. If the fault persists, upgrade the software, GP 4.

003-973 Image Rotation RAP

003-973 The document and the image are different in orientation (except when poster is specified). When rotation is not available even though the orientation of the document and the image are different and part of the image will be lost if it is not rotated.

Procedure

Perform the steps that follow:

1. Advise the customer to verify the image loss and use a larger paper size if available. Or use reduction to make a smaller document, then retry the job.
2. If the fault persists, upgrade the software, GP 4.

003-974 Next Original Specification RAP

003-974 Next document specified. Scanning has been completed for all loaded documents.

Procedure

Perform the steps that follow:

1. Ask the customer to verify that scanning is complete or if other documents should be loaded.
2. If the fault persists, upgrade the software, GP 4.

003-977 Document Mismatch (Multi Scan) RAP

003-977 Document size mismatch (document exchange during multi scan).

Procedure

Perform the steps that follow:

1. Ask the customer to load a correct size document, then retry the job.
2. If the fault persists, upgrade the software, GP 4.

003-978 Color Document Mismatch (Multi Scan) RAP

003-978 Document color mismatch (document replacement during multi scan).

Procedure

Perform the steps that follow:

1. Advise the customer to reload the correct size paper, then retry the job.
2. If the fault persists, upgrade the software, GP 4.

005-121 DADF Jam

005-121 A jam in the DADF is detected.

Procedure

Open the DADF top cover, PL 21.1 Item 2 and remove the jammed paper.

005-211 DADF Motor Fail

005-211 An DADF motor error was detected.

Procedure

Switch the machine off, then on, GP 10.

005-305 DADF Feeder Cover Interlock Open RAP

005-305 The DADF feeder cover was opened during DADF operation.

Procedure

WARNING

Ensure that the electricity to the machine is switched off while performing tasks that do not need electricity. Refer to GP 10. Disconnect the power cord. Electricity can cause death or injury. Moving parts can cause injury.

Perform the steps that follow:

1. Open the DADF top cover, PL 21.1 Item 2 and remove any jammed paper.
2. Check the DADF feeder cover for mismatch.
3. Perform GP 25, Function 03. NVRAM INIT MODE.

CAUTION

When installing a new ESS PWB and a new MCU PWB at the same time, first install the new ESS PWB, by following REP 18.1 (B405), REP 18.2 (B400). If the new ESS PWB installation is successful, switch off the machine, GP 10. Then, install the new MCU PWB.

4. If the fault persists, install new components as necessary:
   - DADF top cover, PL 21.1 Item 2.
   - ESS PWB, PL 18.1A Item 5 (B400) or PL 18.1B Item 5 (B405).
   - MCU PWB, PL 18.2 Item 2.

     NOTE: *If the fault persists after startup, perform dC132 to verify all numbers match. Go to Serial Number Re-Synchronization in GSN (Library 1503).*

   - DADF tray assembly, PL 21.1 Item 11.

005-900 DADF Static Jam RAP

005-900 DADF pre-registration sensor detected paper when powering on, closing the feeder cover or closing the DADF.

Procedure

WARNING

Ensure that the electricity to the machine is switched off while performing tasks that do not need electricity. Refer to GP 10. Disconnect the power cord. Electricity can cause death or injury. Moving parts can cause injury.

Perform the steps that follow:

1. Open the DADF top cover, PL 21.1 Item 2 and remove any jammed paper.
2. Check the DADF feeder cover for mismatch.
3. Perform GP 25, Function 03. NVRAM INIT MODE.

CAUTION

When installing a new ESS PWB and a new MCU PWB at the same time, first install the new ESS PWB, by following REP 18.1 (B405), REP 18.2 (B400). If the new ESS PWB installation is successful, switch off the machine, GP 10. Then, install the new MCU PWB.

4. If the fault persists, install new components as necessary:
   - DADF top cover, PL 21.1 Item 2.
   - ESS PWB, PL 18.1A Item 5 (B400) or PL 18.1B Item 5 (B405).
   - MCU PWB, PL 18.2 Item 2.

     NOTE: *If the fault persists after startup, perform dC132 to verify all numbers match. Go to Serial Number Re-Synchronization in GSN (Library 1503).*

   - DADF tray assembly, PL 21.1 Item 11.

005-940 DADF No Original RAP

005-940 A document was pulled out during document feed.

Procedure

Reload the document.

005-941 Not Enough Documents RAP

005-941 Some originals were missing after all originals were returned.

Procedure

Follow the instructions on the UI to reload the documents.

010-105 to 010-106 Fuser Exit Sensor Fail RAP

010-105 After the registration clutch turns on, the exit sensor is not activated by the paper within the specified time.

010-106 After the registration clutch turns off, the exit sensor is not activated by the paper within the specified time.

Procedure

WARNING

Ensure that the electricity to the machine is switched off while performing tasks that do not need electricity. Refer to GP 10. Disconnect the power cord. Electricity can cause death or injury. Moving parts can cause injury.

Perform the steps that follow:

1. Switch Off, then switch on the machine, GP 10.
2. Ensure the fuser is installed correctly.
3. Ensure the power supply voltage is within specification, refer to GP 17 Electrical Power Requirements.
4. Check the drawer connector between the fuser and the main unit (D/J233) for damage.
5. Check the connector between the fuser (P/J233) and the MCU PWB (P/J23) for an open circuit, short circuit or poor contact.
6. Check the connections and wiring between the fuser (D/J233) and the LVPS (P/J201) for an open circuit, short circuit or poor contact.
7. Check the connections and wiring between the MCU (P/J22) and the LVPS (P/J220) for an open circuit, short circuit or poor contact.
8. If the fault persists, install new components as necessary:
   - Fuser, PL 7.1 Item 1.
   - LVPS, PL 18.1A Item 10 (B400) or PL 18.1B Item 10 (B405).
   - MCU PWB, PL 18.2 Item 2.

010-328 Fuser Heat Roll Fail RAP

010-328 The fuser heat roll did not reach operating temperature in the specified time.

Procedure

WARNING

Ensure that the electricity to the machine is switched off while performing tasks that do not need electricity. Refer to GP 10. Disconnect the power cord. Electricity can cause death or injury. Moving parts can cause injury.

Perform the steps that follow:

1. Switch Off, then switch on the machine, GP 10.
2. Ensure the fuser is installed correctly.
3. Ensure the power supply voltage is within specification, refer to GP 17 Electrical Power Requirements.
4. Check the drawer connector between the fuser and the main unit (D/J233) for damage.
5. Check the connector between the fuser (P/J233) and the MCU PWB (P/J23) for an open circuit, short circuit or poor contact.
6. Check the connections and wiring between the fuser (D/J233) and the LVPS (P/J201) for an open circuit, short circuit or poor contact.
7. Check the connections and wiring between the MCU (P/J22) and the LVPS (P/J220) for an open circuit, short circuit or poor contact.
8. If the fault persists, install new components as necessary:
   - Fuser, PL 7.1 Item 1.
   - LVPS, PL 18.1A Item 10 (B400) or PL 18.1B Item 10 (B405).
   - MCU PWB, PL 18.2 Item 2.

010-331 Over Temperature Fail RAP

010-331 Fuser over temperature detected.

Initial Actions

WARNING

Ensure that the electricity to the machine is switched off while performing tasks that do not need electricity. Refer to GP 10. Disconnect the power cord. Electricity can cause death or injury. Moving parts can cause injury.

- Remove the fuser. Ensure no foreign substances or paper are wound around the heat roll.

Procedure

Perform the steps that follow:

1. Switch Off, then switch on the machine, GP 10.
2. Ensure the fuser is installed correctly.
3. Ensure the power supply voltage is within specification, refer to GP 17 Electrical Power Requirements.
4. Check the drawer connector between the fuser and the main unit (D/J233) for damage.
5. Check the connector between the fuser (P/J233) and the MCU PWB (P/J23) for an open circuit, short circuit or poor contact.
6. Check the connections and wiring between the fuser (D/J233) and the LVPS (P/J201) for an open circuit, short circuit or poor contact.
7. Check the connections and wiring between the MCU (P/J22) and the LVPS (P/J220) for an open circuit, short circuit or poor contact.
8. If the fault persists, install new components as necessary:
   - Fuser, PL 7.1 Item 1.
   - LVPS, PL 18.1A Item 10 (B400) or PL 18.1B Item 10 (B405).
   - MCU PWB, PL 18.2 Item 2.

010-332 Heat Roll NC Sensor Fail RAP

010-332 Fuser NC Sensor disconnection detected.

Procedure

WARNING

Ensure that the electricity to the machine is switched off while performing tasks that do not need electricity. Refer to GP 10. Disconnect the power cord. Electricity can cause death or injury. Moving parts can cause injury.

Perform the steps that follow:

1. Switch Off, then switch on the machine, GP 10.
2. Ensure the fuser is installed correctly.
3. Ensure the power supply voltage is within specification, refer to GP 17 Electrical Power Requirements.
4. Check the drawer connector between the fuser and the main unit (D/J233) for damage.
5. Check the connector between the fuser (P/J233) and the MCU PWB (P/J23) for an open circuit, short circuit or poor contact.
6. Check the connections and wiring between the fuser (D/J233) and the LVPS (P/J201) for an open circuit, short circuit or poor contact.
7. Check the connections and wiring between the MCU (P/J22) and the LVPS (P/J220) for an open circuit, short circuit or poor contact.
8. If the fault persists, install new components as necessary:
   - Fuser, PL 7.1 Item 1.
   - LVPS, PL 18.1A Item 10 (B400) or PL 18.1B Item 10 (B405).
   - MCU PWB, PL 18.2 Item 2.

010-335 Heat Roll NC Sensor Fail RAP

010-335 Fuser NC sensor compensation output AD value was detected as outside the specification value.

Procedure

WARNING

Ensure that the electricity to the machine is switched off while performing tasks that do not need electricity. Refer to GP 10. Disconnect the power cord. Electricity can cause death or injury. Moving parts can cause injury.

Perform the steps that follow:

1. Switch Off, then switch on the machine, GP 10.
2. Ensure the fuser is installed correctly.
3. Ensure the power supply voltage is within specification, refer to GP 17 Electrical Power Requirements.
4. Check the drawer connector between the fuser and the main unit (D/J233) for damage.
5. Check the connector between the fuser (P/J233) and the MCU PWB (P/J23) for an open circuit, short circuit or poor contact.
6. Check the connections and wiring between the fuser (D/J233) and the LVPS (P/J201) for an open circuit, short circuit or poor contact.
7. Check the connections and wiring between the MCU (P/J22) and the LVPS (P/J220) for an open circuit, short circuit or poor contact.
8. If the fault persists, install new components as necessary:
   - Fuser, PL 7.1 Item 1.
   - LVPS, PL 18.1A Item 10 (B400) or PL 18.1B Item 10 (B405).
   - MCU PWB, PL 18.2 Item 2.

010-338 Fuser Heat Roll On Time Fail RAP

010-338 Fusing Main Lamp or Sub Lamp is continuously activated longer than the time set in NVM.

Procedure

WARNING

Ensure that the electricity to the machine is switched off while performing tasks that do not need electricity. Refer to GP 10. Disconnect the power cord. Electricity can cause death or injury. Moving parts can cause injury.

Perform the steps that follow:

1. Switch Off, then switch on the machine, GP 10.
2. Ensure the fuser is installed correctly.
3. Ensure the power supply voltage is within specification, refer to GP 17 Electrical Power Requirements.
4. Check the drawer connector between the fuser and the main unit (D/J233) for damage.
5. Check the connector between the fuser (P/J233) and the MCU PWB (P/J23) for an open circuit, short circuit or poor contact.
6. Check the connections and wiring between the fuser (D/J233) and the LVPS (P/J201) for an open circuit, short circuit or poor contact.
7. Check the connections and wiring between the MCU (P/J22) and the LVPS (P/J220) for an open circuit, short circuit or poor contact.
8. If the fault persists, install new components as necessary:
   - Fuser, PL 7.1 Item 1.
   - LVPS, PL 18.1A Item 10 (B400) or PL 18.1B Item 10 (B405).
   - MCU PWB, PL 18.2 Item 2.

010-398 Rear Fan Failure RAP

010-398 Rear Fan failure occurs.

Procedure

WARNING

Ensure that the electricity to the machine is switched off while performing tasks that do not need electricity. Refer to GP 10. Disconnect the power cord. Electricity can cause death or injury. Moving parts can cause injury.

Perform the steps that follow:

1. Switch Off, then switch on the machine, GP 10.
2. If the fault persists, install a new Rear Fan, PL 19.3A Item 9 (B400) or PL 19.3B Item 9 (B405).

010-344 Fuser Heat Roll Standby Temperature Fail RAP

010-344 Fuser Heat Roll standby temperature is low.

Procedure

WARNING

Ensure that the electricity to the machine is switched off while performing tasks that do not need electricity. Refer to GP 10. Disconnect the power cord. Electricity can cause death or injury. Moving parts can cause injury.

Perform the steps that follow:

1. Switch Off, then switch on the machine, GP 10.
2. Ensure the fuser is installed correctly.
3. Ensure the power supply voltage is within specification, refer to GP 17 Electrical Power Requirements.
4. Check the drawer connector between the fuser and the main unit (D/J233) for damage.
5. Check the connector between the fuser (P/J233) and the MCU PWB (P/J23) for an open circuit, short circuit or poor contact.
6. Check the connections and wiring between the fuser (D/J233) and the LVPS (P/J201) for an open circuit, short circuit or poor contact.
7. Check the connections and wiring between the MCU (P/J22) and the LVPS (P/J220) for an open circuit, short circuit or poor contact.
8. If the fault persists, install new components as necessary:
   - Fuser, PL 7.1 Item 1.
   - LVPS, PL 18.1A Item 10 (B400) or PL 18.1B Item 10 (B405).
   - MCU PWB, PL 18.2 Item 2.

010-420 Fuser Near Life Warning RAP

010-420 Fuser replacement time is approaching.

Procedure

No service action necessary. Advise the customer that the fuser is near of life.

010-421 Fuser Life Warning RAP

010-421 Fuser replacement time.

Procedure

Install a new fuser, PL 7.1 Item 1.

016-210, 506, 777, 780, 798 HDD Error RAP

016-210 One of the SW option functions cannot be executed due to an HDD error or HDD not installed.

016-506 The log image storage area on the disk is full, a job cannot be continued.

016-777 An error other than disk full was detected when opening/reading/writing file for compression conversion/image processing operation.

016-780 An error other than HDD full was detected when opening/writing file for operation.

016-798 A HDD unavailable error was returned when the decomposer called the S-image library.

Procedure

WARNING

Ensure that the electricity to the machine is switched off while performing tasks that do not need electricity. Refer to GP 10. Disconnect the power cord. Electricity can cause death or injury. Moving parts can cause injury.

Perform the steps that follow:

1. Switch off, then switch on the machine, GP 10.
2. Ensure the HDD is properly connected to the to the ESS PWB PL 18.1A Item 5 (B400) or PL 18.1B Item 5 (B045).
3. Initialise the HDD. Refer to dC355 Hard Disk Diagnostics.
4. Perform GP 25, Function 04. HDD FORMAT MODE.
5. If the fault persists, Install a new hard disk, PL 18.1A Item 91 (B400) or PL 18.1B Item 91 (B405).

016-211, 016-212 SW Option Fail Memory Low RAP

016-211 Insufficient system memory was detected.

016-212 Insufficient Page Memory was detected.

Procedure

Perform the steps that follow:

1. Switch off, then switch on the machine, GP 10.
2. Refer the customer to the User Guide to check memory usage.

016-213 SW Option Fail (Printer Card) RAP

016-213 The PRT_CARD was not installed or an error was detected when optional function software (internet fax kit) was enabled.

Procedure

For information only, no service action necessary.

016-214 SW Option Fail (Fax Card) RAP

016-214 The fax card was not installed or an error was detected when SW optional function was enabled.

Procedure

WARNING

Ensure that the electricity to the machine is switched off while performing tasks that do not need electricity. Refer to GP 10. Disconnect the power cord. Electricity can cause death or injury. Moving parts can cause injury.

Perform the steps that follow:

1. Switch off, then switch on the machine, GP 10.
2. Ensure the fax PWB is correctly installed.

016-215, 016-216 SW Option Fail RAP

016-215 The scanner functions cannot be executed due to a JPEG board error or JPEG board not installed.

016-216 The system detected that the extension memory was not installed.

Procedure

For information only, no service action necessary.

016-217 SW Option Fail (Controller ROM) RAP

016-217 Controller ROM does not support printer kit.

Procedure

For information only, no service action necessary.

016-218 PS Kit Not Installed for XDOD RAP

016-218 The PS Kit required for XDOD function was not installed.

Procedure

Perform the steps that follow:

1. Switch off, then switch on the machine, GP 10.
2. Advise the customer that the postscript kit is required.

016-219 License Required (Printer Kit) RAP

016-219 The ROM was replaced without license (printer kit software key not set).

Procedure

For information only, no service action necessary.

016-220 to 016-228, 240 S2X Error RAP

016-220 A unrecoverable error was detected at the S2X PWB.

016-221 Communication with the S2X PWB has failed.

016-222 An error has occurred in the S2X PWB self-diagnostics.

016-223 The S2X PWB has failed the write/read test of the internal SDRAM.

016-224 The S2X PWB has failed to access to the internal PCI space.

016-225 The S2X PWB failed the ROM check sum test.

016-226 The S2X PWB failed to detect the video clocks sent from the IIT.

016-227 The S2X PWB failed the write/read test of the internal DDR memory.

016-228 The S2X PWB failed the desired value comparison of the high-compression process results using the internal test patterns.

016-240 The high compression PDF board (S2X) failed the NVM checksum

Procedure

For information only, no service action necessary.

016-230 License Required (PS Image Log Kit) RAP

016-230 The PS-ROM was installed with ’SW key: Image Log Kit for PS’ in disabled state.

Procedure

For information only, no service action necessary.‘

016-232 MRC HW Initialize Error RAP

016-232 MRC HW initialize error. an error has occurred during high compression board initialization.

Procedure

For information only, no service action necessary.

016-233 SW Option Fail (USB Host Not Installed) RAP

016-233 Any one of the SW optional functions cannot be used because the USB host has a failure or is not installed.

Procedure

For information only, no service action necessary.

016-234 to 016-235 XCP Error RAP

016-234 Lack of memory causes the XCP to stop.

016-235 Another internal error causes the XCP function to stop.

Procedure

WARNING

Ensure that the electricity to the machine is switched off while performing tasks that do not need electricity. Refer to GP 10. Disconnect the power cord. Electricity can cause death or injury. Moving parts can cause injury.

Perform the steps that follow:

1. Switch off, then switch on the machine, GP 10.
2. Initialise the hard disk. Refer to dC355 Hard Disk Diagnostics.

016-242 System GMT Clock Fail RAP

016-242 System GMT clock fail.

Procedure

WARNING

Ensure that the electricity to the machine is switched off while performing tasks that do not need electricity. Refer to GP 10. Disconnect the power cord. Electricity can cause death or injury. Moving parts can cause injury.

Perform the steps that follow:

1. Switch off, then switch on the machine, GP 10.
2. Upgrade the software, GP 4.
3. Perform GP 25, Function 03. NVRAM INIT MODE.

CAUTION

When installing a new ESS PWB and a new MCU PWB at the same time, first install the new ESS PWB, by following REP 18.1 (B405), REP 18.2 (B400). If the new ESS PWB installation is successful, switch off the machine, GP 10. Then, install the new MCU PWB.

4. Install a new:
   - ESS PWB, PL 18.1A Item 5 (B400) or PL 18.1B Item 5 (B405).
   - MCU PWB, PL 18.2 Item 2.

   NOTE: *If the fault persists after startup, perform dC132 to verify all numbers match. Go to Serial Number Re-Synchronization in GSN (Library 1503)*

016-244 Self-Signed Certificate Auto Update Fail RAP

016-244 Self-signed certificate auto update failure.

Procedure

WARNING

Ensure that the electricity to the machine is switched off while performing tasks that do not need electricity. Refer to GP 10. Disconnect the power cord. Electricity can cause death or injury. Moving parts can cause injury.

Perform the steps that follow:

1. Switch off, then switch on the machine, GP 10.
2. Obtain Audit and Device Logs and escalate to 2nd level support, GP 23.

016-245, 016-246 Invalid Accessory Mode RAP

016-245 Invalid accessory in auth and account mode.

016-246 Invalid accessory kind in auth and account mode.

Procedure

For information only, no service action necessary.

016-310 SSMM Job Log Full RAP

016-310 A job log file was not retrieved from the external application (AWAS) and the number of files stored exceeded the specified value (280).

Procedure

Perform the steps that follow:

1. Switch off, then switch on the machine, GP 10.

016-311, 315, 319 Scanner Not Detected RAP

016-311 The system detected that the scanner was not installed.

016-315 An error in the I/F between the scanner and the main processor was detected.

016-319 An error in the I/F between the scanner and the main unit was detected.

Procedure

WARNING

Ensure that the electricity to the machine is switched off while performing tasks that do not need electricity. Refer to GP 10. Disconnect the power cord. Electricity can cause death or injury. Moving parts can cause injury.

Perform the steps that follow:

1. Switch off, then switch on the machine, GP 10.
2. Ensure that all connectors on the ESS PWB, PL 18.1A Item 5 (B400) or PL 18.1B Item 5 (B405) are securely connected. Ensure all surface mounted modules are securely connected.
3. Upgrade the software, GP 4.
4. If the fault persists, install a new ESS PWB, PL 18.1A Item 5 (B400) or PL 18.1B Item 5 (B405).

016-312, 313, 314 SW Option Fail (Hybrid WaterMark) RAP

016-312 When the SW optional function is being enabled, the system detected that the hybrid watermark detection H/W is not installed.

016-313 The hybrid watermark detection H/W was detected but the SW option (secure watermark kit) was not enabled.

016-314 The board for detecting the back (side 2) of a document is not installed. Therefore (paper security) is unavailable.

Procedure

WARNING

Ensure that the electricity to the machine is switched off while performing tasks that do not need electricity. Refer to GP 10. Disconnect the power cord. Electricity can cause death or injury. Moving parts can cause injury.

Perform the steps that follow:

1. Switch off, then switch on the machine, GP 10.
2. Perform OF 3 Special Boot Modes RAP.
3. Ensure that all connectors on the ESS PWB, PL 18.1A Item 5 (B400) or PL 18.1B Item 5 (B405) are securely connected. Ensure all surface mounted modules are securely connected.
4. Upgrade the software, GP 4.
5. If the fault persists, install a new ESS PWB, PL 18.1A Item 5 (B400) or PL 18.1B Item 5 (B405).

016-316, 317, 318, 329, 333, 334 Page Memory Error RAP

016-316 The system detected that the page memory (standard) of the scanner was not installed.

016-317 The system detected an error in the Page Memory (standard) of the scanner.

016-318 The system detected an error in the Page Memory (option) of the scanner.

016-329 Long boot diag page memory not detected fail.

016-333 Long boot diag page memory broken standard fail.

016-334 Long boot diag page memory broken option fail.

Procedure

For information only, no service action necessary.

016-320 Document Formatter Error RAP

016-320 A software error was detected when converting documents.

Procedure

WARNING

Ensure that the electricity to the machine is switched off while performing tasks that do not need electricity. Refer to GP 10. Disconnect the power cord. Electricity can cause death or injury. Moving parts can cause injury.

Perform the steps that follow:

1. Switch off, then switch on the machine, GP 10.
2. Perform OF 3 Special Boot Modes RAP.
3. Ensure that all connectors on the ESS PWB, PL 18.1A Item 5 (B400) or PL 18.1B Item 5 (B405) are securely connected. Ensure all surface mounted modules are securely connected.
4. Upgrade the software, GP 4.
5. If the fault persists, install a new ESS PWB, PL 18.1A Item 5 (B400) or PL 18.1B Item 5 (B405).

016-321 Fax Module Error RAP

016-321 Fax related error at booting.

Procedure

WARNING

Ensure that the electricity to the machine is switched off while performing tasks that do not need electricity. Refer to GP 10. Disconnect the power cord. Electricity can cause death or injury. Moving parts can cause injury.

Perform the steps that follow:

1. Switch off, then switch on the machine, GP 10.
2. Ensure that all connectors on the FAX PWB, PL 18.1B Item 15, are securely connected.
3. Upgrade the software, GP 4.
4. If the fault persists, install a new FAX PWB, PL 18.1B Item 15.

016-322 JBA Account Full RAP

016-322 The cumulated accounting data reached the specified value (15,000).

Procedure

WARNING

Ensure that the electricity to the machine is switched off while performing tasks that do not need electricity. Refer to GP 10. Disconnect the power cord. Electricity can cause death or injury. Moving parts can cause injury.

Perform the steps that follow:

1. Switch off, then switch on the machine, GP 10.
2. Perform OF 3 Special Boot Modes RAP.
3. Ensure that all connectors on the ESS PWB, PL 18.1A Item 5 (B400) or PL 18.1B Item 5 (B405) are securely connected. Ensure all surface mounted modules are securely connected.
4. Upgrade the software, GP 4.
5. If the fault persists, install a new ESS PWB, PL 18.1A Item 5 (B400) or PL 18.1B Item 5 (B405).

016-323 B-Formatter Fatal Error RAP

016-323 Fatal error has occurred in the B-formatter task.

Procedure

WARNING

Ensure that the electricity to the machine is switched off while performing tasks that do not need electricity. Refer to GP 10. Disconnect the power cord. Electricity can cause death or injury. Moving parts can cause injury.

Perform the steps that follow:

1. Switch off, then switch on the machine, GP 10.
2. Perform OF 3 Special Boot Modes RAP.
3. Ensure that all connectors on the ESS PWB, PL 18.1A Item 5 (B400) or PL 18.1B Item 5 (B405) are securely connected. Ensure all surface mounted modules are securely connected.
4. Upgrade the software, GP 4.
5. If the fault persists, install a new ESS PWB, PL 18.1A Item 5 (B400) or PL 18.1B Item 5 (B405).

016-324 Scheduled Image Overwrite RAP

016-324 Scheduled image overwrite.

Procedure

For information only, no service action necessary. Wait until the Scheduled Image Overwrite to complete.

016-325 Using Personal Certificate RAP

016-325 The IC card personal certificate is set in the certificate for signing.

Procedure

Perform the steps that follow:

1. Enter dC131. Set NVM value 790-389 to 0.

016-326, 016-607 UI Cable Connection Fail RAP

016-326 The controller has detected a failure at its cable connection with the UI.

016-607 Cont-UI Cable Connection Fail

Procedure

WARNING

Ensure that the electricity to the machine is switched off while performing tasks that do not need electricity. Refer to GP 10. Disconnect the power cord. Electricity can cause death or injury. Moving parts can cause injury.

Perform the steps that follow:

1. Check the wiring between the ESS PWB and the UI.
2. Perform GP 25, Function 03. NVRAM INIT MODE.

CAUTION

When installing a new ESS PWB and a new MCU PWB at the same time, first install the new ESS PWB, by following REP 18.1 (B405), REP 18.2 (B400). If the new ESS PWB installation is successful, switch off the machine, GP 10. Then, install the new MCU PWB.

3. Install new components as necessary:
   - ESS PWB, PL 18.1A Item 5 (B400) or PL 18.1B Item 5 (B405).
   - MCU PWB, PL 18.2 Item 2.

     NOTE: *If the fault persists after startup, perform dC132 to verify all numbers match. Go to Serial Number Re-Synchronization in GSN (Library 1503).*

   - UI assembly, PL 1.1A Item 4 (B400) or PL 1.1B Item 4 (B405).

016-327, 016-328 Connection Fail RAP

016-327 Backplane connection fail.

016-328 The controller has detected a failure at its cable connection with the MCU.

Procedure

WARNING

Ensure that the electricity to the machine is switched off while performing tasks that do not need electricity. Refer to GP 10. Disconnect the power cord. Electricity can cause death or injury. Moving parts can cause injury.

Perform the steps that follow:

1. Switch off, then switch on the machine, GP 10.
2. Ensure that all connectors on the ESS PWB, PL 18.1A Item 5 (B400) or PL 18.1B Item 5 (B405) are securely connected. Ensure all surface mounted modules are securely connected.
3. Upgrade the software, GP 4.

016-330, 331, 332 Cont System Memory Fail RAP

016-330 Cont system memory diagnostic fail 1.

016-331 Cont system memory diagnostic fail 2.

016-332 Cont system memory diagnostic fail 3.

Procedure

WARNING

Ensure that the electricity to the machine is switched off while performing tasks that do not need electricity. Refer to GP 10. Disconnect the power cord. Electricity can cause death or injury. Moving parts can cause injury.

Perform the steps that follow:

1. Switch off, then switch on the machine, GP 10.
2. Ensure that all connectors on the ESS PWB, PL 18.1A Item 5 (B400) or PL 18.1B Item 5 (B405) are securely connected. Ensure all surface mounted modules are securely connected.
3. Upgrade the software, GP 4.
4. If the fault persists, install a new ESS PWB, PL 18.1A Item 5 (B400) or PL 18.1B Item 5 (B405).

016-335 to 016-351 Controller Fail RAP

016-335 Cont program ROM diagnostic fail 1.

016-336 Cont program ROM diagnostic fail 2.

016-337 Cont program ROM diagnostic fail 3.

016-338 Cont font ROM diagnostic fail 1.

016-339 Cont font ROM diagnostic fail 2.

016-340 Cont font ROM diagnostic fail 3.

016-341 Cont font ROM diagnostic fail 4.

016-342 Cont RTC diagnostic fail.

016-343 Long boot diag timer fail.

016-345 Cont NVM diagnostic fail.

016-346 Cont A4 fax modem diagnosis fail.

016-347 Cont page memory diagnostic fail 1.

016-348 Cont page memory fail 2.

016-349 Cont MAC address data fail.

016-350 Cont SEEP-ROM diagnostic fail 1.

016-351 Cont SEEP-ROM diagnostic fail 2.

Procedure

WARNING

Ensure that the electricity to the machine is switched off while performing tasks that do not need electricity. Refer to GP 10. Disconnect the power cord. Electricity can cause death or injury. Moving parts can cause injury.

Perform the steps that follow:

1. Switch off, then switch on the machine, GP 10.
2. Reseat the EMMC Card, PL 18.1A Item 6 (B400) or PL 18.1B Item 6 (B405).
3. Ensure that all connectors on the ESS PWB, PL 18.1A Item 5 (B400) or PL 18.1B Item 5 (B405) are securely connected. Ensure all surface mounted modules are securely connected.
4. Upgrade the software, GP 4.
5. If the fault persists, install a new ESS PWB, PL 18.1A Item 5 (B400) or PL 18.1B Item 5 (B405).

016-352 Internal Network Initialize Fail RAP

016-352 Internal network initialization error.

Procedure

Perform the steps that follow:

1. Switch off, then switch on the machine, GP 10.
2. Upgrade the software, GP 4.
3. If the fault persists, install a new ESS PWB, PL 18.1A Item 5 (B400) or PL 18.1B Item 5 (B405).

016-353, 016-354 IOT-Controller Communication Fail RAP

016-353 Communication cannot be established between the IOT and the ESS.

016-354 Communication cannot be established between the IIT and the controller.

Procedure

WARNING

Ensure that the electricity to the machine is switched off while performing tasks that do not need electricity. Refer to GP 10. Disconnect the power cord. Electricity can cause death or injury. Moving parts can cause injury.

Perform the steps that follow:

1. Switch off, then switch on the machine, GP 10.
2. Ensure that all connectors on the MCU PWB, PL 18.2 Item 2 and the ESS PWB, PL 18.1A Item 5 (B400) or PL 18.1B Item 5 (B405), are securely connected. Ensure all surface mounted modules on both PWBs are securely connected.
3. Upgrade the software, GP 4.
4. Perform GP 25, Function 03. NVRAM INIT MODE.

CAUTION

When installing a new ESS PWB and a new MCU PWB at the same time, first install the new ESS PWB, by following REP 18.1 (B405), REP 18.2 (B400). If the new ESS PWB installation is successful, switch off the machine, GP 10. Then, install the new MCU PWB.

5. If the fault persists, install a new components as necessary:
   - ESS PWB, PL 18.1A Item 5 (B400) or PL 18.1B Item 5 (B405).
   - MCU PWB, PL 18.2 Item 2.

   NOTE: *If the fault persists after startup, perform dC132 to verify all numbers match. Go to Serial Number Re-Synchronization in GSN (Library 1503)*

016-355, 016-356 Controller ASIC Fail RAP

016-355 Cont IO ASIC diagnostic fail.

016-356 Cont video ASIC diagnostic fail.

Procedure

WARNING

Ensure that the electricity to the machine is switched off while performing tasks that do not need electricity. Refer to GP 10. Disconnect the power cord. Electricity can cause death or injury. Moving parts can cause injury.

Perform the steps that follow:

1. Switch off, then switch on the machine, GP 10.
2. Ensure that all connectors on the ESS PWB, PL 18.1B Item 5, are securely connected. Ensure all surface mounted modules are securely connected.
3. Upgrade the software, GP 4.
4. If the fault persists, install a new components and necessary:
   - ESS PWB, PL 18.1B Item 5.
   - IIT assembly, PL 21.1 Item 14.
   - Scanner assembly, PL 21.1 Item 1.

016-357 Controller EP Communication Fail RAP

016-357 Controller to EP-controller communication fail.

Procedure

WARNING

Ensure that the electricity to the machine is switched off while performing tasks that do not need electricity. Refer to GP 10. Disconnect the power cord. Electricity can cause death or injury. Moving parts can cause injury.

Perform the steps that follow:

1. Switch off, then switch on the machine, GP 10.
2. Ensure that all connectors on the ESS PWB, PL 18.1A Item 5 (B400) or PL 18.1B Item 5 (B405) are securely connected. Ensure all surface mounted modules are securely connected.
3. Upgrade the software, GP 4.
4. If the fault persists, install a new ESS PWB, PL 18.1A Item 5 (B400) or PL 18.1B Item 5 (B405).

016-358 Controller Parallel Card Fail RAP

016-358 Controller parallel port diagnostic fail.

Procedure

For information only, no service action necessary. Wait until the Scheduled Image Overwrite to complete.

016-359, 016-361 Controller USB Fail RAP

016-359 Cont USB HUB diagnostic fail.

016-361 Cont USB 3.0 device diagnostic fail.

Procedure

WARNING

Ensure that the electricity to the machine is switched off while performing tasks that do not need electricity. Refer to GP 10. Disconnect the power cord. Electricity can cause death or injury. Moving parts can cause injury.

Perform the steps that follow:

1. Switch off, then switch on the machine, GP 10.
2. Perform GP 25, Function 03. NVRAM INIT MODE.

CAUTION

When installing a new ESS PWB and a new MCU PWB at the same time, first install the new ESS PWB, by following REP 18.1 (B405), REP 18.2 (B400). If the new ESS PWB installation is successful, switch off the machine, GP 10. Then, install the new MCU PWB.

3. Install a new:
   - ESS PWB, PL 18.1A Item 5 (B400) or PL 18.1B Item 5 (B405).
   - MCU PWB, PL 18.2 Item 2.

   NOTE: *If the fault persists after startup, perform dC132 to verify all numbers match. Go to Serial Number Re-Synchronization in GSN (Library 1503).*

016-360, 016-362 Controller UI Fail RAP

016-360 Cont UI diagnostic fail 1.

016-362 Cont UI diagnostic fail 2.

Procedure

WARNING

Ensure that the electricity to the machine is switched off while performing tasks that do not need electricity. Refer to GP 10. Disconnect the power cord. Electricity can cause death or injury. Moving parts can cause injury.

Perform the steps that follow:

1. Switch off, then switch on the machine, GP 10.
2. Perform GP 25, Function 03. NVRAM INIT MODE.

CAUTION

When installing a new ESS PWB and a new MCU PWB at the same time, first install the new ESS PWB, by following REP 18.1 (B405), REP 18.2 (B400). If the new ESS PWB installation is successful, switch off the machine, GP 10. Then, install the new MCU PWB.

3. Install a new:
   - ESS PWB, PL 18.1A Item 5 (B400) or PL 18.1B Item 5 (B405).
   - MCU PWB, PL 18.2 Item 2.

   NOTE: *If the fault persists after startup, perform dC132 to verify all numbers match. Go to Serial Number Re-Synchronization in GSN (Library 1503).*

016-363 Controller LyraCard Fail RAP

016-363 Cont JPEG card diagnosed as having a failure.

Procedure

For information only, no service action necessary. Wait until the Scheduled Image Overwrite to complete.

016-364, 016-365 Controller USB 2.0 Fail RAP

016-364 Cont USB 2.0 host diagnostic fail.

016-365 Cont USB 2.0 device diagnostic fail.

Procedure

For information only, no service action necessary. Wait until the Scheduled Image Overwrite to complete.

016-366, 016-367 Controller HDD Fail RAP

016-366 Cont HDD diagnostic fail 1.

016-367 Cont HDD diagnostic fail 2.

Procedure

WARNING

Ensure that the electricity to the machine is switched off while performing tasks that do not need electricity. Refer to GP 10. Disconnect the power cord. Electricity can cause death or injury. Moving parts can cause injury.

Perform the steps that follow:

1. Switch off, then switch on the machine, GP 10.
2. Check the wiring between the ESS PWB, PL 18.1A Item 5 (B400) or PL 18.1B Item 5 (B405) and the HDD, PL 18.1A Item 91 (B400) or PL 18.1B Item 91 (B405).
3. Upgrade the software, GP 4.
4. Perform GP 25, Function 03. NVRAM INIT MODE.

CAUTION

When installing a new ESS PWB and a new MCU PWB at the same time, first install the new ESS PWB, by following REP 18.1 (B405), REP 18.2 (B400). If the new ESS PWB installation is successful, switch off the machine, GP 10. Then, install the new MCU PWB.

5. Install new components as necessary:
   - ESS PWB, PL 18.1A Item 5 (B400) or PL 18.1B Item 5 (B405).
   - MCU PWB, PL 18.2 Item 2.

     NOTE: *If the fault persists after startup, perform dC132 to verify all numbers match. Go to Serial Number Re-Synchronization in GSN (Library 1503).*

   - HDD, PL 18.1A Item 91 (B400) or PL 18.1B Item 91 (B405).

016-368, 369, 370 Controller Diagnostic Fail RAP

016-368 Cont torino diagnostic fail.

016-369 Cont S2X board diagnostic fail.

016-370 Cont rendering engine diagnosed as having a failure.

Procedure

WARNING

Ensure that the electricity to the machine is switched off while performing tasks that do not need electricity. Refer to GP 10. Disconnect the power cord. Electricity can cause death or injury. Moving parts can cause injury.

Perform the steps that follow:

1. Switch off, then switch on the machine, GP 10.
2. Ensure that all connectors on the ESS PWB, PL 18.1A Item 5 (B400) or PL 18.1B Item 5 (B405) are securely connected. Ensure all surface mounted modules are securely connected.
3. Upgrade the software, GP 4.
4. If the fault persists, install a new ESS PWB, PL 18.1A Item 5 (B400) or PL 18.1B Item 5 (B405).

016-371 Controller USB 1.1 Host Fail RAP

016-371 A defect was detected during a diagnostic check of USB 1.1 host (no communication with the fax card could be established).

Procedure

WARNING

Ensure that the electricity to the machine is switched off while performing tasks that do not need electricity. Refer to GP 10. Disconnect the power cord. Electricity can cause death or injury. Moving parts can cause injury.

Perform the steps that follow:

1. Switch off, then switch on the machine, GP 10.
2. Ensure that all connectors on the FAX PWB, PL 18.1B Item 15, are securely connected.
3. Upgrade the software, GP 4.
4. If the fault persists, install a new FAX PWB, PL 18.1B Item 15.

016-383 Controller OS Communication Fail RAP

016-383 Communication failure between linux and VX works

Procedure

WARNING

Ensure that the electricity to the machine is switched off while performing tasks that do not need electricity. Refer to GP 10. Disconnect the power cord. Electricity can cause death or injury. Moving parts can cause injury.

Perform the steps that follow:

1. Switch off, then switch on the machine, GP 10.
2. Ensure that all connectors on the ESS PWB, PL 18.1A Item 5 (B400) or PL 18.1B Item 5 (B405) are securely connected. Ensure all surface mounted modules are securely connected.
3. Upgrade the software, GP 4.
4. If the fault persists, install a new ESS PWB, PL 18.1A Item 5 (B400) or PL 18.1B Item 5 (B405).

016-400, 402, 427, 429 802.1x Authentication Failure RAP

016-400 802.1x Authentication error (incorrect user name or password). The user name or password that has been set in the machine is incorrect. The settings are different from those in the authentication device switch that is physically connected to the machine via the network.

016-402 802.1x authentication time-out (there was no response signal from the authentication device). The authentication was timed-out because there was no response signal from the authentication device switch that is physically connected to the machine via the network.

016-427 802.1x authentication failure (network 2).

016-429 802.1x authentication failure by timing out (network 2).

Procedure

Have the customer:

1. Enter the correct user name or password for 802.1x authentication from the machine panel.
2. Check the switch settings and network connections of the authentication device switch that is physically connected to the machine via the network and connect it correctly.
3. Check the settings in the Authentication Device switch that is physically connected to the machine via the network.

016-401 802.1x EAP Type Not Supported RAP

016-401 802.1x Authentication method mismatch (the authentication server does not support the authentication method of the machine). A fail signal, which indicates that the authentication method set in the machine cannot be processed, was received from the authentication device switch that is physically connected to the machine via the network.

Procedure

Have the customer:

1. Set the authentication method of the machine to be the same as the one set in the authentication server.
2. Check the 802.1x authentication method from the UI.

016-403, 016-430 802.1x Certificate Failure RAP

016-403 802.1x authentication certificate mismatch. The root server certificate for the authentication server is not stored in the machine or it is mismatched.

016-430 The route certificate of the server certificate (for network 2) of the authentication server is not stored in the machine or it does not match.

Procedure

Have the customer:

1. Store the root server certificate for the authentication server in the machine.
2. If the root certificate of the server certificate cannot be obtained, disable the 802.1x setting item ‘Verify Server Certificate’ in the device.

016-404, 016-431 802.1x Inside Failure RAP

016-404 An internal error has occurred in the 802.1x supplicant function of the machine. An incorrect protocol signal was received from the authentication server.

016-431 An internal error has occurred in the 802.1x supplicant function of the machine. An incorrect protocol signal was received from the authentication server in network 2.

Procedure

Have the customer repeat the operation.

016-405 Certificate DB File Error RAP

016-405 Certificate database file is wrong.

Procedure

Have the customer start 'Initialize certificate' under Maintenance.

016-406 802.1x Client Certificate Failure RAP

016-406 An error in setting up client certificate for 802.1x authentication. Although 'EAP-TLS' is selected as the authentication method for 802.1x authentication, SSL client certificate is not set up or deleted.

Procedure

Have the customer:

1. Store SSL client certificate in this machine and set it up as SSL client certificate.
2. If SSL client certificate cannot be set up, select an authentication method other than 'EAP-TLS'.

016-407 to 016-412 XCP Error RAP

016-407 The package management function has detected security exception.

016-408 The package management function has detected the damaged JAR file.

016-409 The package management function has detected a version mismatch.

016-410 The package management function has detected the invalid definition file.

016-411 The package management function has detected an unsupported class file version.

016-412 The package management function has detected the plug-in has caused an error that is included in a miscellaneous group of errors.

Procedure

Have the customer modify the plug-in, then re-install.

016-422, 016-423 Offline RAP

016-422 Diag Offline

016-423 Offline

Procedure

Perform the steps that follow:

1. If a remote access session in progress, wait for it to end.
2. If the fault persists, switch off, then switch on the machine, GP 10.

016-424, 016-425 Power Mode RAP

016-424 Low power mode.

016-425 Sleep mode.

Procedure

Perform the steps that follow:

1. Press the power button to cancel the power save mode.
2. If the fault persists, switch off, then switch on the machine, GP 10.

016-426 Smart eSolutions Connect Fail RAP

016-426 Could not connect to SMart eSolutions server.

Procedure

Switch off, then switch on the machine, GP 10.

016-428 802.1x EAP Type Not Supported (Network 2) RAP

016-428 802.1x Authentication method mismatch (authentication server does not support the authentication method of this device: network 2)

Procedure

Have the customer:

1. Set the authentication method of network 2 of this device to the same authentication method as the one set in the authentication server.
2. Check the 802.1x authenticating method on the UI.

016-432 802.1x Client Certificate Failure (Network 2) RAP

016-432 802.1x setting error of the client certificate of the authentication (network 2).

Procedure

Have the customer:

1. Store the client certificate to this machine SSL and set as SSL client certificate.
2. If the setting of SSL client certificate cannot be made, select other than (EAP-TLS) as the authentication method.

016-450 SMB Host Name Duplicated RAP

016-450 A PC of the same host name exists on the network.

Procedure

Have the customer:

1. Check whether the device host name setting of the same host name is the same as another device. If the setting is duplicated, change the host name of the device or duplicate device.
2. If a duplicated setting is not confirmed, change the device host name.

016-453, 016-454 Dynamic DNS - IPv6 NG RAP

016-453 Failed to update of the IPv6 address and host name to the DNS server.

016-454 Dynamic DNS - dynamic update failed.

Procedure

Perform the steps that follow:

1. Have the customer:
   a. Check that DNS server address is set correctly in the device.
   b. Check with the System Administrator whether the DNS server settings that allow dynamic DNS using IPv6 address have been set.
2. If the fault persists, perform the 016A Workflow Scanning Error Entry RAP.

016-455, 016-456 SNTP Time Out RAP

016-455 There is no response from the SNTP server within the specified time (60sec).

016-456 A standard time synchronized source message and an asynchronous message was received from the SNTP server.

Procedure

Perform the steps that follow:

1. Have the customer:
   a. Check that the SNTP server address is set correctly in the device.
   b. Check the time on the machine, if the time on the machine is incorrect, manually set the time.
2. If the fault persists, perform the 016A Workflow Scanning Error Entry RAP.

016-461 Under Non-transmitted Image Log Stagnation RAP

016-461 Creation of a new job is being restricted because image logs yet to be transferred are piled up and delayed.

Procedure

Perform the steps that follow:

1. Have the customer:
   a. Check the image log management server status and the network status, and clear any cause that may impede the transfer of image logs to the image log server.
   b. Check the transfer settings and transfer all logs that are yet to be transferred. Or, change the transfer guarantee level to 'Low'.

      NOTE: *Setting the transfer guarantee level to 'Low' may cause the image logs to get deleted in sequence even before they are transferred.*
2. If the fault persists, upgrade the software, GP 4.

016-500, 016-501 ROM Write Error (During DLD Method) RAP

016-500 An error has occurred during the process of writing data to the cont-ROM.

016-501 An error has occurred during the process of writing data to the S2X-ROM.

Procedure

WARNING

Ensure that the electricity to the machine is switched off while performing tasks that do not need electricity. Refer to GP 10. Disconnect the power cord. Electricity can cause death or injury. Moving parts can cause injury.

Perform the steps that follow:

1. Upgrade the software, GP 4.
2. If the fault persists, install a new ESS PWB, PL 18.1A Item 5 (B400) or PL 18.1B Item 5 (B405).

016-502 ROM Write Error (During PJL Method) RAP

016-502 An error was detected when writing data to one of the ROMs in the machine.

Procedure

WARNING

Ensure that the electricity to the machine is switched off while performing tasks that do not need electricity. Refer to GP 10. Disconnect the power cord. Electricity can cause death or injury. Moving parts can cause injury.

Perform the steps that follow:

1. Switch off, then switch on the machine, GP 10.
2. Ensure that all connectors on the ESS PWB, PL 18.1A Item 5 (B400) or PL 18.1B Item 5 (B405) are securely connected. Ensure all surface mounted modules are securely connected.
3. Upgrade the software, GP 4.
4. If the fault persists, install a new ESS PWB, PL 18.1A Item 5 (B400) or PL 18.1B Item 5 (B405).

016-503 SMTP Server Fail for Redirector RAP

016-503 The SMTP server name could not be resolved (though the machine tried to connect to the server).

Procedure

Perform the steps that follow:

1. Have the customer specify the correct SMTP server name or specify the IP address.
2. If the fault persists, contact 2nd level support.

016-504 POP Server Fail for Redirector RAP

016-504 The POP server name could not be resolved (though the machine tried to connect to the server).

Procedure

Perform the steps that follow:

1. Have the customer specify the correct POP server name or specify the IP address.
2. If the fault persists, perform the 016A Workflow Scanning Error Entry RAP.

016-505 POP Authentication Fail for Redirector RAP

016-505 Incorrect POP Server authentication information was detected.

Procedure

Perform the steps that follow:

1. Have the customer specify the correct POP Server authentication information.
2. If the fault persists, perform the 016A Workflow Scanning Error Entry RAP.

016-507, 016-508 Image Log Send Fail RAP

016-507 A log image transfer fails, making it impossible to continue a target job which will consist of created images.

016-508 A log image transfer fails, making it impossible to continue an image transfer job.

Procedure

Perform the steps that follow:

1. Have the customer check the state of the destination image log control server and that of the network. Clear any factor preventing image logs from being transferred to the image log control server.
2. Initialise the hard disk. Refer to dC355 Hard Disk Diagnostics.
3. If the fault persists, install a new hard disk, PL 18.1A Item 91 (B400) or PL 18.1B Item 91 (B405).

016-509, 016-510 Image Log No Send Rule RAP

016-509 Because rules for log image transfer are not registered, a job cannot be continued.

016-510 Rules for log image transfer are not registered.

Procedure

WARNING

Ensure that the electricity to the machine is switched off while performing tasks that do not need electricity. Refer to GP 10. Disconnect the power cord. Electricity can cause death or injury. Moving parts can cause injury.

Perform the steps that follow:

1. Have the customer register rules for transfer from the destination image log control server to the device.
2. Check the wiring between the ESS PWB, PL 18.1A Item 5 (B400) or PL 18.1B Item 5 (B405) and the HDD, PL 18.1A Item 91 (B400) or PL 18.1B Item 91 (B405).
3. Initialise the hard disk. Refer to dC355 Hard Disk Diagnostics.
4. Install a new HDD, PL 18.1A Item 91 (B400) or PL 18.1B Item 91 (B405).

016-511, 016-512 Image Log Invalid Send Rule RAP

016-511 Rules for log image transfer are illegal, causing a job to be discontinued.

016-512 Rules for log image transfer are illegal.

Procedure

WARNING

Ensure that the electricity to the machine is switched off while performing tasks that do not need electricity. Refer to GP 10. Disconnect the power cord. Electricity can cause death or injury. Moving parts can cause injury.

Perform the steps that follow:

1. Have the customer overwrite rules for transfer from the destination image log control server to the device.
2. Check the wiring between the ESS PWB, PL 18.1A Item 5 (B400) or PL 18.1B Item 5 (B405) and the HDD, PL 18.1A Item 91 (B400) or PL 18.1B Item 91 (B405).
3. Initialise the hard disk. Refer to dC355 Hard Disk Diagnostics.
4. Install a new HDD, PL 18.1A Item 91 (B400) or PL 18.1B Item 91 (B405).

016-513 SMTP Server Reception Error RAP

016-513 Error when receiving response from the SMTP server (after connecting to the server).

Procedure

Perform the steps that follow:

1. Have the customer wait 5 minutes before resubmitting the job.
2. Check the SSL/TLS settings and Port number:

   On the Web UI, under Connectivity > SMTP > Connection Security. Ensure that the customer is using the appropriate encryption type for their mail server.
3. If the fault persists, advise the customer to consult with their network administrator for the correct configuration.

016-514 XPS Error RAP

016-514 During XPS Bridge processing, invalid schema, parameter error, damage to XPS file, or an error internal to XPS decomposer occurred.

Procedure

WARNING

Ensure that the electricity to the machine is switched off while performing tasks that do not need electricity. Refer to GP 10. Disconnect the power cord. Electricity can cause death or injury. Moving parts can cause injury.

Perform the steps that follow:

1. Switch off, then switch on the machine, GP 10.
2. Ensure that all connectors on the ESS PWB, PL 18.1A Item 5 (B400) or PL 18.1B Item 5 (B405) are securely connected. Ensure all surface mounted modules are securely connected.
3. Upgrade the software, GP 4.
4. If the fault persists, perform the 016A Workflow Scanning Error Entry RAP.

016-515 XPS Short of Memory

016-515 During XPS Bridge processing, a lack of memory was detected.

Procedure

WARNING

Ensure that the electricity to the machine is switched off while performing tasks that do not need electricity. Refer to GP 10. Disconnect the power cord. Electricity can cause death or injury. Moving parts can cause injury.

Perform the steps that follow:

1. Have the customer check the print mode. If print mode is set to High Resolution, change it to Standard. If print mode is set to Standard, change it to High Speed.
2. Check the wiring between the ESS PWB, PL 18.1A Item 5 (B400) or PL 18.1B Item 5 (B405) and the HDD, PL 18.1A Item 91 (B400) or PL 18.1B Item 91 (B405). Ensure all surface mounted modules are securely connected.
3. Upgrade the software GP 4.
4. If the fault persists, perform the 016A Workflow Scanning Error Entry RAP.

016-516 XPS Print Ticket Description Error RAP

016-516 XPS Print Ticket description error.

Procedure

WARNING

Ensure that the electricity to the machine is switched off while performing tasks that do not need electricity. Refer to GP 10. Disconnect the power cord. Electricity can cause death or injury. Moving parts can cause injury.

Perform the steps that follow:

1. Have the customer check whether the application that sends a print job and the print instructions has a problem.
2. Check the wiring between the ESS PWB, PL 18.1A Item 5 (B400) or PL 18.1B Item 5 (B405) and the HDD, PL 18.1A Item 91 (B400) or PL 18.1B Item 91 (B405). Ensure all surface mounted modules are securely connected.
3. Upgrade the software GP 4.

016-517 PS Booklet Illegal Color Mode Change RAP

016-517 PS documents to be printed into a booklet have black and white and color areas.

Procedure

WARNING

Ensure that the electricity to the machine is switched off while performing tasks that do not need electricity. Refer to GP 10. Disconnect the power cord. Electricity can cause death or injury. Moving parts can cause injury.

Perform the steps that follow:

1. Have the customer resubmit the job with corrected parameters. Rewrite the PostScript file so that the page device and process color model cannot be changed in the process.
2. Ensure that all connectors on the ESS PWB, PL 18.1A Item 5 (B400) or PL 18.1B Item 5 (B405) and the HDD, PL 18.1A Item 91 (B400) or PL 18.1B Item 91 (B405), are securely connected. Ensure all surface mounted modules are securely connected.
3. Upgrade the software, GP 4.

016-518 PS Booklet Conflict WM RAP

016-518 PS booklet and watermarks were specified at the same time.

Procedure

WARNING

Ensure that the electricity to the machine is switched off while performing tasks that do not need electricity. Refer to GP 10. Disconnect the power cord. Electricity can cause death or injury. Moving parts can cause injury.

Perform the steps that follow:

1. PS booklet and watermark/UUID cannot be specified at the same time. Have the customer cancel either one.
2. Ensure that all connectors on the ESS PWB, PL 18.1A Item 5 (B400) or PL 18.1B Item 5 (B405) and the HDD, PL 18.1A Item 91 (B400) or PL 18.1B Item 91 (B405), are securely connected. Ensure all surface mounted modules are securely connected.
3. Upgrade the software, GP 4.

016-519 Device DV Limit Reached RAP

016-519 Number of printable sides limit full.

Procedure

Ask the System Administrator to increase the limit of printable sides.

016-520 MRC HW Job Error RAP

016-520 An error has occurred during the usage of high compression board.

Procedure

WARNING

Ensure that the electricity to the machine is switched off while performing tasks that do not need electricity. Refer to GP 10. Disconnect the power cord. Electricity can cause death or injury. Moving parts can cause injury.

Perform the steps that follow:

1. Have the customer repeat the operation or change the output file format/color mode.
2. Ensure that all connectors on the ESS PWB, PL 18.1A Item 5 (B400) or PL 18.1B Item 5 (B405) and the HDD, PL 18.1A Item 91 (B400) or PL 18.1B Item 91 (B405), are securely connected. Ensure all surface mounted modules are securely connected.
3. Upgrade the software, GP 4.

016-521 SmartCard Not Found RAP

016-521 After a personal signature scan job has started up, the Smart Card was removed or the Card Reader was detached, which causes the personal signature to fail.

Procedure

WARNING

Ensure that the electricity to the machine is switched off while performing tasks that do not need electricity. Refer to GP 10. Disconnect the power cord. Electricity can cause death or injury. Moving parts can cause injury.

Perform the steps that follow:

1. Have the customer insert the smart card into the reader then recheck the PIN before performing the personal signature scan.
2. Check the wiring between the card reader and the machine.

016-522 LDAP SSL Error 112 RAP

016-522 LDAP-SSL authentication error 112 has occurred (the client certificate cannot be obtained).

Procedure

Have the customer install the SSL client certificate into the device as the LDAP server will request it.

016-523 LDAP SSL Error 113 RAP

016-523 LDAP-SSL authentication error 112 has occurred (the client certificate cannot be obtained).

Procedure

The device cannot trust the SSL certificate of the LDAP server. Have the customer register the root certificate of the LDAP server SSL certificate in the device.

016-524, 016-525 LDAP SSL Error 114 and 115 RAP

016-524 LDAP-SSL authentication error 114 has occurred (the server certificate is close to expiring).

016-525 LDAP-SSL authentication error 115 has occurred (the server certificate has expired).

Procedure

Have the customer change the LDAP server SSL certificate to one that is valid.

016-526 LDAP SSL Error 116 RAP

016-526 LDAP-SSL authentication error 116 has occurred (the server name and the certificate does not match)

Procedure

Have the customer ensure that the address of the LDAP server set in the device matches the address of the LDAP server defined in the SSL certificate.

016-527 LDAP SSL Error 117 RAP

016-526 LDAP-SSL authentication error 116 has occurred (the server name and the certificate does not match)

Procedure

For information only, an internal error has occurred in the program.

016-528 SmartCard Not Authorized RAP

016-528 After a personal signature scan job started, the smart card PIN check status was cleared, which causes the personal signature to fail.

Procedure

Have the customer check the PIN, then perform the personal signature scan.

016-529 Remote Download Server Timeout RAP

016-529 There was no response within the specified time (45 sec) when connecting to the remote download server.

Procedure

Check the network connection. Have the customer check that the remote download server is correctly configured and operating on the network.

016-533 Kerberos Attestation Protocol Error 37 RAP

016-533 A Kerberos server Attestation protocol error has occurred. The clock difference between the device and the Kerberos server has exceeded the clock skew limit of the Kerberos server.

Procedure

Have the customer:

1. Check that the clocks of the device and Kerberos server are set correctly.
2. Check that the daylight saving time and time zone settings for the device and the Kerberos server are the same.

016-534 Kerberos Attestation Protocol Error 41 and 42 RAP

016-534 A Kerberos server Attestation protocol error has occurred.

Procedure

Have the customer check that the realm name and server address in the Kerberos settings of the device are set correctly.

016-535 Remote Download File Access Error RAP

016-535 There are no FW update files in the remote download server.

Procedure

Have the customer check the remote download server for the FW update file.

016-536 Host Name Solution Error in Remote Download RAP

016-536 Remote download server name resolution error.

Procedure

Have the customer check the connection to the DNS and whether the remote download server name has been registered in the DNS.

016-537 Remote Download Server Connection Error RAP

016-537 Remote download server connection error.

Procedure

Have the customer check the network connection setting (port) of the remote download server.

016-538 Remote Download File Write Error RAP

016-538 Remote download file write to HDD error.

Procedure

WARNING

Ensure that the electricity to the machine is switched off while performing tasks that do not need electricity. Refer to GP 10. Disconnect the power cord. Electricity can cause death or injury. Moving parts can cause injury.

Perform the steps that follow:

1. Switch off, then switch on the machine, GP 10.
2. Check the wiring between the ESS PWB, PL 18.1A Item 5 (B400) or PL 18.1B Item 5 (B405) and the HDD, PL 18.1A Item 91 (B400) or PL 18.1B Item 91 (B405).
3. Initialise the hard disk. Refer to dC355 Hard Disk Diagnostics.
4. Install a new HDD, PL 18.1A Item 91 (B400) or PL 18.1B Item 91 (B405).

016-539 Kerberos Attestation Other Protocol Error RAP

016-539 A Kerberos Server Attestation protocol error has occurred.

Procedure

For information only, an internal error has occurred in the program.

016-543 Attestation Agent Error 543 RAP

016-543 The specified realm/domain has disappeared from the ApeosWare authentication agent (the domain was manually deleted at the ApeosWare authentication agent after obtaining the realm name list from the device).

Procedure

Have the customer:

1. Update the realm list, using the Update Realm button on the device, or add the domain to the ApeosWare authentication agent. To update the device realm information, perform the steps that follow:
   a. Press the Authentication Agent button on the Authentication window of the device.
   b. The Authentication Agent window appears. Press the Update button.

016-545 Attestation Agent Error 545 RAP

016-545 A Clock skew error has occurred in attestation. The time of ApeosWare Authentication Agent and ActiveDirectory is out of sync with the upper limit of the Kerberos ClockSkew set in the ActiveDirectory.

Procedure

Have the customer match the time of the PC where the ApeosWare Authentication agent is installed with the time of the PC where the ActiveDirectory is. Furthermore, if the Windows Time Service in the PC where the ApeosWare Authentication Agent is installed is stopped, start it.

016-546, 558, 569 Attestation Agent Errors RAP

016-546 A general user has attempted to obtain other user's information.

016-558 The machine has received an unknown error from the ApeosWare Authentication Agent.

016-569 Attestation agent errors other than listed previously.

Procedure

Switch off, then switch on the machine, GP 10.

016-548 Attestation Agent Error 548 RAP

016-548 The information of the machine that is performing the authentication operation is not in the database.

Procedure

Have the customer register the device in the ApeosWare Authentication Agent.

016-553 Attestation Agent Error 553 RAP

016-553 The version information written in the SOAP header cannot be understood. The ApeosWare Authentication Agent does not support the version of the device interface.

Procedure

The version of the ApeosWare Authentication Agent needs to be upgraded. Have the customer check that the machine is a product that is supported by the upgraded version of the ApeosWare Authentication Agent.

016-554 Attestation Agent Error 554 RAP

016-554 The existence check for the specified user in the event of an authentication error has failed.

Procedure

Have the customer correctly set the domain user reference login name or the reference password of the ApeosWare Authentication Agent domain.

016-555 Attestation Agent Error 555 RAP

016-555 The ApeosWare Authentication Agent cannot connect to the database or the Active Directory.

Procedure

Have the customer check that the ApeosWare Authentication Agent can connect to the database or the active directory.

016-556 Attestation Agent Error 556 RAP

016-556 Error has occurred in the database that the ApeosWare Authentication Agent is connected to due to overloading.

Procedure

Have the customer wait 5 minutes before authenticating again as the service is overloaded.

016-557 Attestation Agent Error 557 RAP

016-557 An internal error has occurred in the ApeosWare Authentication Agent.

Procedure

Have the customer check the ApeosWare Authentication Agent.

016-559 Remote Download Parameter Error RAP

016-559 When performing the remote download, an invalid value is set in the required system data.

Procedure

Have the customer check that all system data that must be set to perform the remote download are correct.

016-560 Attestation Agent Error 560 RAP

016-560 A communication error has occurred between the ApeosWare Authentication Agent and the machine.

Procedure

Have the customer:

1. Check that the network cable is connected and check the settings of the authentication agent function.
2. If DNS address of the server is set as the server name/IP address of the ApeosWare Authentication Agent in the printer function settings list, check that DNS is enabled.

016-562 Detected User Duplication RAP

016-562 Two or more entries with the same IC card information were found in the temporary user DB of Active Directory or Authentication Agent.

Procedure

Have the customer make corrections so that the temporary user entries of the Active Directory or Authentication Agent do not have the same IC card information.

016-563 Image Log Memory Full RAP

016-563 When the system data 'Log/Image Creation Guarantee Level' is set to 'High', the Image Extension Kit has insufficient memory.

Procedure

Have the customer make corrections so that the temporary user entries of the Active Directory or Authentication Agent do not have the same IC card information.

016-564 Remote Download Server Authentication Failed RAP

016-564 When accessing the remote download server, an authentication error notification was issued from the server.

Procedure

Have the customer check that the correct user name and password was specified when accessing the remote download server.

016-565 Backup Restore Error RAP

016-565 Backup/restore error.

Procedure

Perform the steps that follow:

1. For USB backup, check that the USB memory is correctly installed. If the fault persists, use a PC to check the USB memory for a 'backup' directory. If it is not there, create it.
2. When performing restore or deletion of backup files from the USB backup file, check that the USB memory is correctly installed.

016-566 Backup Restore Condition Error RAP

016-566 NVM backup/restore condition error.

Procedure

Have the customer:

1. During backup, save the FW download file into the 'dwld' directory in the USB memory, connect it the machine, then perform the backup.
2. During restore, use the same IOT and IIT ROM versions as those during backup. When performing restore using a USB backup file, also use the same HDD configuration.
3. If there is no HDD, use the same ESS ROM versions as well. If the same configuration cannot be attained, delete the backup file from the panel.
4. If the problem occurred at an attempt to restore a backed-up file from an external place, check that the ESS/IIT/IOT/fax ROM version is still the same as the version used when the backed-up file was created. Furthermore, check the device is the same as the one that generated the backed-up file.

016-567 Backup Capacity Full RAP

016-567 NVM data to back up is over the capacity of the destination to save it.

Procedure

Perform the steps that follow:

1. Before performing the HDD backup, delete existing backup files through to increase the capacity.
2. Before performing USB backup, delete the backup files in the USB memory, or use a PC to delete unnecessary files on the USB memory to increase the capacity.

016-568 Backup Restore Failed RAP

016-568 NVM data could not be backed up or restored.

Procedure

Perform the steps that follow:

1. Format the hard disk. Refer to dC355 Hard Disk Diagnostics.
2. Before performing the restore using the HDD backup file, delete backup files.
3. For USB backup, check that the USB memory is correctly installed. If the fault persists, use a PC to format the USB Memory.
4. When performing restore using USB backup files, check that the USB memory is correctly installed. If the fault persists, delete the backup files.
5. If the problem still persists, use a PC to format the USB memory.

016-570 Job Ticket Out of Memory RAP

016-570 XPIF memory is low.

Procedure

Increase memory size for job ticket on UI Panel. Switch off, then switch on the machine, GP 10. Run the job.

016-571 Job Ticket Wrong Parameters RAP

016-571 XPIF parameter mismatch.

Procedure

Have the customer check for a mismatch between parameters specified by the job ticket. Correct the parameters, then resend the job.

016-572 Job Ticket Media Error RAP

016-572 XPIF media conversion error.

Procedure

Have the customer check that the device that receives data can print it onto paper whose properties (size/type/weight/color/punched) are specified by job ticket.

016-573 Job Ticket Parse Error RAP

016-573 XPIF Interpret error.

Procedure

Have the customer ensure the that software is correctly installed on client that generates job ticket; operational requirements are met; and software version matches device version.

016-574 FTP Host Name Solution Error RAP

016-574 Unable to resolve host name during FTP scan.

Procedure

Have the customer check the connection to the DNS and whether the destination server name has been registered in the DNS.

016-575 FTP DNS Server Error RAP

016-575 The DNS server was not set during FTP scan.

Procedure

Have the customer set the DNS address or set the destination server address using IP address.

016-576 FTP Server Connection Error RAP

016-576 Problem with connection to server during FTP scan.

Procedure

Have the customer check that the network communication between the transfer destination FTP server and the machine is available. For example:

- Check that the server IP address is correct.
- Check the connection of network cables.

016-577 FTP Service RAP

016-577 Failed to connect to the FTP service of the destination server.

Procedure

Have the customer:

1. Check that the server IP address is correct.
2. Check the connection of the network cables.

016-578 FTP Login Name or Password Error RAP

016-578 FTP scan login name or password error.

Procedure

Have the customer check that the login name (user name) and password are correct.

016-579 FTP Scanning Picture Preservation Place Error RAP

016-579 Problem with scanned image storage destination of FTP scan.

Procedure

Have the customer check that the scanned image storage destination on the FTP scan server is correct.

016-580 FTP File Name Acquisition Failure RAP

016-580 Unable to obtain file name/folder name on the FTP scan server.

Procedure

1. Ask the customer to check the access rights to the FTP scan server.
2. Ask the customer to check the image storage destination folder name.
3. Perform GP 22 to obtain the machine logs and contact support for further information

016-581 FTP File Name Suffix Limit RAP

016-581 The FTP scan file name/folder name suffix has exceeded the limit.

Procedure

1. Advise the customer to change the file name/destination folder or move or delete the files in the destination folder.
2. If the fault persists Perform GP 22 to obtain the machine logs and contact support for further information.

016-582, 016-588 FTP File Creation Failure RAP

016-582 When creating a file in the server after connecting to the FTP server, the file creation has failed.

016-588 Failed to write data into the server after connecting to the FTP server.

Procedure

Advise the customer to:

1. Check that the specified name is a file name that can be created in the storage destination.
2. Check that the storage destination has enough free space.

016-583, 016-584 FTP Folder Creation Failure RAP

016-583 When creating a lock folder in the server after connecting to the FTP server, the lock folder creation has failed.

016-584 When creating a folder in the server after connecting to the FTP server, the folder creation has failed.

Procedure

Have the customer:

1. If a lock directory (*.LCK) remains in the transfer destination, delete it then retry the job.
2. Check that the specified name is a folder name that can be created in the storage destination.
3. Check whether a folder with the same name as the specified name already exists.
4. Check that the storage destination has enough free space.
5. Confirm that the FTP user has correct permissions for the scanned image destination.

016-585, 587, 589 FTP File Delete/Read Failure RAP

016-585 When deleting a file in the server after connecting to the FTP server, the deletion has failed.

016-587 When deleting a folder in the server after connecting to the FTP server, the deletion has failed.

016-589 Failed to read data from the FTP server after connecting to the FTP server during scanner (save to PC) FTP transfer.

Procedure

Have the customer check whether there is access right to the FTP server and grant the proper rights.

016-586 FTP Lock Folder Delete Failure RAP

016-586 When deleting a lock folder in the server after connecting to the FTP server, the deletion has failed.

Procedure

Have the customer:

1. Check the access right to the server.
2. If a lock directory (*.LCK) remains in the transfer destination, delete it then retry the job.
3. Confirm that the FTP user has correct permissions for the scanned image destination.

016-590 FTP Data Reading Failure RAP

016-590 Unable to save a file after connecting to the FTP server during scanner (save to PC) FTP transfer because 'File Name Conflict' is set to 'Cancel Job'.

Procedure

Have the customer set 'File Name Conflict' to other than 'Cancel Job'.

016-591 FTP Scan Filing Policy RAP

016-591 Incorrect filing policy (when additional items are selected) was detected after connecting with the FTP server.

Procedure

When 'Add' is selected for 'File Name Conflict', have the customer check that the file format is not set to Multi-page.

016-592 FTP DAT File Access Error RAP

016-592 An error has occurred when accessing the NEXTNAME.DAT file after connecting to the FTP server during scanner (Save to PC) FTP transfer.

Procedure

When 'Add' is selected for 'File Name Conflict', have the customer check that the NEXT-NAME.DAT file is correct.

016-593 to 016-596 FTP Error RAP

016-593 An internal error has occurred after connecting to the FTP server.

016-594 The TYPE command has failed after connecting to the FTP server.

016-595 The PORT command has failed after connecting to the FTP server.

016-596 The CDUP command has failed after connecting to the FTP server.

Procedure

Have the customer repeat the operation.

016-597 Same File on FTP Server RAP

016-597 The process was cancelled because a file/folder with the same name was detected after connecting to the FTP server.

Procedure

Have the customer perform the same operation again without multiple machines accessing the same folder in the same server.

016-598, 016-599 Email Message Size RAP

016-598 Email message size is over spec.

016-599 Email message size is over spec.

Procedure

Have the customer:

1. Reduce a resolution send parameter (image-to-send quality) then resend the job.
2. Reduce a magnification send parameter, then resend the job.
3. Increase the maximum message size (10MB recommended default).

016-600 KO Authentication Locked RAP

016-600 The number of incorrect Key Operator log in attempts reached the limit.

Procedure

If required, refer to GP 19 to reset password to 1111 (default) if the System Administrator ID is unavailable.

NOTE: *Default is 5 events. NVM Read/Write 700-563 can be set between 1 to 10 events.*

With this feature enabled, the machine denies access when an incorrect System Administrator ID is entered the selected number of times.

016-601 Illegal Access Detection RAP

016-601 The number of incorrect authentication log in attempts reached the limit.

Procedure

If required, refer to GP 19 to reset password to 1111 (default) if the System Administrator ID is unavailable.

NOTE: *Default is 10 users. NVM Read/Write 700-564 can be set between 1 to 600 users.*

016-604 Debug Log Created RAP

016-604 Debug log auto creation by system.

Procedure

Switch off, then switch on the machine, GP 10.

016-606, 016-608 Controller Connection Fail RAP

016-606 Cont-BP cable connection fail.

016-608 Cont-MCU cable connection fail.

Procedure

WARNING

Ensure that the electricity to the machine is switched off while performing tasks that do not need electricity. Refer to GP 10. Disconnect the power cord. Electricity can cause death or injury. Moving parts can cause injury.

Perform the steps that follow:

1. Switch off, then switch on the machine, GP 10.
2. Ensure that all connectors on the MCU PWB, PL 18.2 Item 2 and the ESS PWB, PL 18.1A Item 5 (B400) or PL 18.1B Item 5 (B405), are securely connected. Ensure all surface mounted modules on both PWBs are securely connected.
3. Upgrade the software, GP 4.
4. Perform GP 25, Function 03. NVRAM INIT MODE.

CAUTION

When installing a new ESS PWB and a new MCU PWB at the same time, first install the new ESS PWB, by following REP 18.1 (B405), REP 18.2 (B400). If the new ESS PWB installation is successful, switch off the machine, GP 10. Then, install the new MCU PWB.

5. If the fault persists, install a new:
   - ESS PWB, PL 18.1A Item 5 (B400) or PL 18.1B Item 5 (B405).
   - MCU PWB, PL 18.2 Item 2.

   NOTE: *If the fault persists after startup, perform dC132 to verify all numbers match. Go to Serial Number Re-Synchronization in GSN (Library 1503).*

016-609, 016-610 PCI Option Fail RAP

016-609 PCI option no support device fail.

016-610 PCI EX option no support device fail.

Procedure

Have the customer deselect the unknown PCI or PCIEX option.

016-611 EMMC Card Connection Fail RAP

016-611 EMMC card connection fail.

Procedure

Ensure the EMMC card, PL 18.1A Item 6 (B400) or PL 18.1B Item 6 (B405), is correctly installed.

016-612 Log Image Creation Failure RAP

016-612 Creation of log image has failed.

Procedure

For information only, no service action necessary.

016-700 Password Below Minimum RAP

016-700 The number of digits used for the password for security and authentication prints is less than the minimum.

Procedure

Have the customer increase the number of password digits for the print job.

016-701 Out of ART EX Memory RAP

016-701 Insufficient memory was detected while using the ART EX.

Procedure

Perform the steps that follow:

1. Have the customer:
   a. Increase the allocated memory of the ART EX.
   b. Lower the print mode.
   c. Lower the resolution.
   d. Set Page Print mode to Enabled.
   e. Execute Image Compression in the Graphics tab of the printer driver.
2. If the fault persists, Upgrade the software, GP 4.

016-702 Out of Page Buffer RAP

016-702 Unable to compress any page due to insufficient print page buffer.

Procedure

Perform the steps that follow:

1. Have the customer:
   a. Set Print Mode to High Speed and reduce the print resolution. Retry the operation.
   b. Increase the memory to increase the page buffer.
   c. Retry the operation in Print Page Mode.
2. If the fault persists, upgrade the software, GP 4.

016-703 Email To Invalid Box RAP

016-703 When receiving Email, fax or internet fax, an invalid (not setup) mailbox number is selected.

Procedure

WARNING

Ensure that the electricity to the machine is switched off while performing tasks that do not need electricity. Refer to GP 10. Disconnect the power cord. Electricity can cause death or injury. Moving parts can cause injury.

Perform the steps that follow:

1. Have the customer:
   a. Check whether the selected mailbox is set up correctly.
   b. Have Email, fax or internet fax sent to a valid mailbox.
2. Ensure the fax PWB is correctly installed, PL 18.1B Item 15.
3. Upgrade the software, GP 4.
4. Check the wiring between the ESS PWB, PL 18.1A Item 5 (B400) or PL 18.1B Item 5 (B405) and the HDD, PL 18.1A Item 91 (B400) or PL 18.1B Item 91 (B405).
5. Initialise the hard disk. Refer to dC355 Hard Disk Diagnostics.
6. Install a new HDD, PL 18.1A Item 91 (B400) or PL 18.1B Item 91 (B405).

016-704 Mailbox Full RAP

016-704 The system detected that a mailbox was full (it exceeded the maximum number of documents per box) and aborted a job.

Procedure

Perform the steps that follow:

1. Have the customer delete unnecessary documents, then repeat the operation.
2. If the fault persists, upgrade the software, GP 4.

016-705 Secure Print Fail RAP

016-705 Unable to perform secure print/mailbox print/pay for print storing from the printer driver. Unable to store scanned documents into a mailbox.

Procedure

WARNING

Ensure that the electricity to the machine is switched off while performing tasks that do not need electricity. Refer to GP 10. Disconnect the power cord. Electricity can cause death or injury. Moving parts can cause injury.

Perform the steps that follow:

1. Have the customer check that the required optional software is installed and enabled. Also check that the correct print driver is being used.
2. If the fault persists, perform the steps that follow:
   a. Upgrade the software, GP 4.
   b. Check the wiring between the ESS PWB, PL 18.1A Item 5 (B400) or PL 18.1B Item 5 (B405) and the HDD, PL 18.1A Item 91 (B400) or PL 18.1B Item 91 (B405).
   c. Initialise the hard disk. Refer to dC355 Hard Disk Diagnostics.
   d. Perform GP 25, Function 03. NVRAM INIT MODE.

   CAUTION

   When installing a new ESS PWB and a new MCU PWB at the same time, first install the new ESS PWB, by following REP 18.1 (B405), REP 18.2 (B400). If the new ESS PWB installation is successful, switch off the machine, GP 10. Then, install the new MCU PWB.

   e. Install new components as necessary:
      - HDD, PL 18.1A Item 91 (B400) or PL 18.1B Item 91 (B405).
      - ESS PWB, PL 18.1A Item 5 (B400) or PL 18.1B Item 5 (B405).
      - MCU PWB, PL 18.2 Item 2.

      NOTE: *If the fault persists after startup, perform dC132 to verify all numbers match. Go to Serial Number Re-Synchronization in GSN (Library 1503).*

016-706 Maximum User Number Exceeded RAP

016-706 The system detected that a job exceeded the maximum number of users for secure and sample prints and aborted the job.

Procedure

Perform the steps that follow:

1. Have the customer delete unnecessary documents or users, then repeat the operation.
2. If the fault persists, upgrade the software, GP 4.

016-707 Sample Print Fail RAP

016-707 When receiving Email, fax or internet fax, an invalid (not setup) mailbox number is selected.

Procedure

WARNING

Ensure that the electricity to the machine is switched off while performing tasks that do not need electricity. Refer to GP 10. Disconnect the power cord. Electricity can cause death or injury. Moving parts can cause injury.

Perform the steps that follow:

1. Have the customer:
   a. Remove the conditions that disable sample print.
   b. If the fault occurred at installation, check whether the operations for Sample Print are correct.
2. Ensure that all connectors on the ESS PWB, PL 18.1A Item 5 (B400) or PL 18.1B Item 5 (B405), are securely connected. Ensure all surface mounted modules are securely connected.
3. Upgrade the software, GP 4.
4. Check the wiring between the ESS PWB, PL 18.1A Item 5 (B400) or PL 18.1B Item 5 (B405) and the HDD, PL 18.1A Item 91 (B400) or PL 18.1B Item 91 (B405).
5. Initialise the hard disk. Refer to dC355 Hard Disk Diagnostics.
6. Perform GP 25, Function 03. NVRAM INIT MODE.

CAUTION

When installing a new ESS PWB and a new MCU PWB at the same time, first install the new ESS PWB, by following REP 18.1 (B405), REP 18.2 (B400). If the new ESS PWB installation is successful, switch off the machine, GP 10. Then, install the new MCU PWB.

7. If the fault persists, install new components as necessary:
   - HDD, PL 18.1A Item 91 (B400) or PL 18.1B Item 91 (B405).
   - ESS PWB, PL 18.1A Item 5 (B400) or PL 18.1B Item 5 (B405).
   - MCU PWB, PL 18.2 Item 2.

   NOTE: *If the fault persists after startup, perform dC132 to verify all numbers match. Go to Serial Number Re-Synchronization in GSN (Library 1503).*

016-708 Annotation/Watermark HDD Full RAP

016-708 When an annotation or watermark image was to be stored in the HDD, full status was detected and the job was aborted.

Procedure

WARNING

Ensure that the electricity to the machine is switched off while performing tasks that do not need electricity. Refer to GP 10. Disconnect the power cord. Electricity can cause death or injury. Moving parts can cause injury.

Perform the steps that follow:

1. Have the customer:
   a. Cancel annotation or watermark, then repeat the operation.
   b. Reduce the number of document pages. In Mixed Size mode, only a single size is available.
   c. For printing Stored Document, delete unnecessary documents from the hard disk, then repeat the operation.
2. Ensure that all connectors on the ESS PWB, PL 18.1A Item 5 (B400) or PL 18.1B Item 5 (B405), are securely connected. Ensure all surface mounted modules are securely connected.
3. Upgrade the software, GP 4.
4. Check the wiring between the ESS PWB, PL 18.1A Item 5 (B400) or PL 18.1B Item 5 (B405) and the HDD, PL 18.1A Item 91 (B400) or PL 18.1B Item 91 (B405).
5. Initialise the hard disk. Refer to dC355 Hard Disk Diagnostics.
6. Perform GP 25, Function 03. NVRAM INIT MODE.

CAUTION

When installing a new ESS PWB and a new MCU PWB at the same time, first install the new ESS PWB, by following REP 18.1 (B405), REP 18.2 (B400). If the new ESS PWB installation is successful, switch off the machine, GP 10. Then, install the new MCU PWB.

7. If the fault persists, install new components as necessary:
   - HDD, PL 18.1A Item 91 (B400) or PL 18.1B Item 91 (B405).
   - ESS PWB, PL 18.1A Item 5 (B400) or PL 18.1B Item 5 (B405).
   - MCU PWB, PL 18.2 Item 2.

   NOTE: *If the fault persists after startup, perform dC132 to verify all numbers match. Go to Serial Number Re-Synchronization in GSN (Library 1503).*

016-709 ART EX Command Error RAP

016-709 An ART EX command error occurred during PLW processing.

Procedure

WARNING

Ensure that the electricity to the machine is switched off while performing tasks that do not need electricity. Refer to GP 10. Disconnect the power cord. Electricity can cause death or injury. Moving parts can cause injury.

Perform the steps that follow:

1. Have the customer:
   a. Switch off parallel bi-directional communication in the printer driver.
   b. Set a longer time for Auto Output Time.
   c. Change the PC BIOS settings.
   d. Use a shorter, genuine, parallel cable.
2. Ensure that all connectors on the ESS PWB, PL 18.1A Item 5 (B400) or PL 18.1B Item 5 (B405), are securely connected. Ensure all surface mounted modules are securely connected.
3. Upgrade the software, GP 4.
4. Check the wiring between the ESS PWB, PL 18.1A Item 5 (B400) or PL 18.1B Item 5 (B405) and the HDD, PL 18.1A Item 91 (B400) or PL 18.1B Item 91 (B405).
5. Initialise the hard disk. Refer to dC355 Hard Disk Diagnostics.
6. Perform GP 25, Function 03. NVRAM INIT MODE.

CAUTION

When installing a new ESS PWB and a new MCU PWB at the same time, first install the new ESS PWB, by following REP 18.1 (B405), REP 18.2 (B400). If the new ESS PWB installation is successful, switch off the machine, GP 10. Then, install the new MCU PWB.

7. If the fault persists, install new components as necessary:
   - HDD, PL 18.1A Item 91 (B400) or PL 18.1B Item 91 (B405).
   - ESS PWB, PL 18.1A Item 5 (B400) or PL 18.1B Item 5 (B405).
   - MCU PWB, PL 18.2 Item 2.

   NOTE: *If the fault persists after startup, perform dC132 to verify all numbers match. Go to Serial Number Re-Synchronization in GSN (Library 1503).*

016-710 Delayed Print Fail RAP

016-710 Process conditions for delay print were not met.

Procedure

WARNING

Ensure that the electricity to the machine is switched off while performing tasks that do not need electricity. Refer to GP 10. Disconnect the power cord. Electricity can cause death or injury. Moving parts can cause injury.

Perform the steps that follow:

1. Have the customer:
   a. If secure print, proof print or knowledge storage print is specified, disable them.
   b. Reduce the delay print jobs waiting to 100 jobs or less.
2. Ensure that all connectors on the ESS PWB, PL 18.1A Item 5 (B400) or PL 18.1B Item 5 (B405), are securely connected. Ensure all surface mounted modules are securely connected.
3. Upgrade the software, GP 4.
4. Check the wiring between the ESS PWB, PL 18.1A Item 5 (B400) or PL 18.1B Item 5 (B405) and the HDD, PL 18.1A Item 91 (B400) or PL 18.1B Item 91 (B405).
5. Initialise the hard disk. Refer to dC355 Hard Disk Diagnostics.
6. Perform GP 25, Function 03. NVRAM INIT MODE.

CAUTION

When installing a new ESS PWB and a new MCU PWB at the same time, first install the new ESS PWB, by following REP 18.1 (B405), REP 18.2 (B400). If the new ESS PWB installation is successful, switch off the machine, GP 10. Then, install the new MCU PWB.

7. If the fault persists, install new components as necessary:
   - HDD, PL 18.1A Item 91 (B400) or PL 18.1B Item 91 (B405).
   - ESS PWB, PL 18.1A Item 5 (B400) or PL 18.1B Item 5 (B405).
   - MCU PWB, PL 18.2 Item 2.

   NOTE: *If the fault persists after startup, perform dC132 to verify all numbers match. Go to Serial Number Re-Synchronization in GSN (Library 1503).*

016-711 Email Transmission Size Limit RAP

016-711 The size of data to send exceeds the system data value (before connection to the server).

Procedure

Have the customer:

1. Reduce the resolution level, which is a transmission parameter, then resend the job.
2. Reduce the magnification ratio, which is a transmission parameter, then resend the job
3. Use System Settings to raise the data size upper limit (recommended default is 2MB).

016-712 Panther Capacity RAP

016-712 Capability of Panther deteriorated.

Procedure

WARNING

Ensure that the electricity to the machine is switched off while performing tasks that do not need electricity. Refer to GP 10. Disconnect the power cord. Electricity can cause death or injury. Moving parts can cause injury.

Perform the steps that follow:

1. Have the customer increase the resolution or enlarge the scan area.
2. Ensure that all connectors on the ESS PWB, PL 18.1A Item 5 (B400) or PL 18.1B Item 5 (B405), are securely connected. Ensure all surface mounted modules are securely connected.
3. Upgrade the software, GP 4.
4. If the fault persists, install a new ESS PWB, PL 18.1A Item 5 (B400) or PL 18.1B Item 5 (B405).

016-713 Security Box Password Error RAP

016-713 Password check error was detected during data storage in a mailbox.

Procedure

WARNING

Ensure that the electricity to the machine is switched off while performing tasks that do not need electricity. Refer to GP 10. Disconnect the power cord. Electricity can cause death or injury. Moving parts can cause injury.

Perform the steps that follow:

1. Have the customer set a correct password and try again.
2. Ensure that all connectors on the ESS PWB, PL 18.1A Item 5 (B400) or PL 18.1B Item 5 (B405), are securely connected. Ensure all surface mounted modules are securely connected.
3. Upgrade the software, GP 4.
4. If the fault persists, install a new ESS PWB, PL 18.1A Item 5 (B400) or PL 18.1B Item 5 (B405).

016-714 Security Box Not Enabled RAP

016-714 The mailbox specified for the job does not exist.

Procedure

WARNING

Ensure that the electricity to the machine is switched off while performing tasks that do not need electricity. Refer to GP 10. Disconnect the power cord. Electricity can cause death or injury. Moving parts can cause injury.

Perform the steps that follow:

1. Have the customer open the appropriate mailbox and then try again.
2. Ensure that all connectors on the ESS PWB, PL 18.1A Item 5 (B400) or PL 18.1B Item 5 (B405), are securely connected. Ensure all surface mounted modules are securely connected.
3. Upgrade the software, GP 4.
4. If the fault persists, install a new ESS PWB, PL 18.1A Item 5 (B400) or PL 18.1B Item 5 (B405).

016-715 ESCP Form Invalid Password RAP

016-715 Unable to access the ESCP form because ESCP form password did not match

Procedure

WARNING

Ensure that the electricity to the machine is switched off while performing tasks that do not need electricity. Refer to GP 10. Disconnect the power cord. Electricity can cause death or injury. Moving parts can cause injury.

Perform the steps that follow:

1. Have the customer input the correct password to use ESCP form.
2. Ensure that all connectors on the ESS PWB, PL 18.1A Item 5 (B400) or PL 18.1B Item 5 (B405), are securely connected. Ensure all surface mounted modules are securely connected.
3. Upgrade the software, GP 4.
4. If the fault persists, install a new ESS PWB, PL 18.1A Item 5 (B400) or PL 18.1B Item 5 (B405).

016-716 TIFF Data Overflow RAP

016-716 The system detected that the files to be spooled in TIFF exceeded the disk capacity.

Procedure

WARNING

Ensure that the electricity to the machine is switched off while performing tasks that do not need electricity. Refer to GP 10. Disconnect the power cord. Electricity can cause death or injury. Moving parts can cause injury.

Perform the steps that follow:

1. Ensure that all connectors on the ESS PWB, PL 18.1A Item 5 (B400) or PL 18.1B Item 5 (B405), are securely connected. Ensure all surface mounted modules are securely connected.
2. Upgrade the software, GP 4.
3. Check the wiring between the ESS PWB, PL 18.1A Item 5 (B400) or PL 18.1B Item 5 (B405) and the HDD, PL 18.1A Item 91 (B400) or PL 18.1B Item 91 (B405).
4. Initialise the hard disk. Refer to dC355 Hard Disk Diagnostics.
5. Perform GP 25, Function 03. NVRAM INIT MODE.

CAUTION

When installing a new ESS PWB and a new MCU PWB at the same time, first install the new ESS PWB, by following REP 18.1 (B405), REP 18.2 (B400). If the new ESS PWB installation is successful, switch off the machine, GP 10. Then, install the new MCU PWB.

6. If the fault persists, install new components as necessary:
   - HDD, PL 18.1A Item 91 (B400) or PL 18.1B Item 91 (B405).
   - ESS PWB, PL 18.1A Item 5 (B400) or PL 18.1B Item 5 (B405).
   - MCU PWB, PL 18.2 Item 2.

   NOTE: *If the fault persists after startup, perform dC132 to verify all numbers match. Go to Serial Number Re-Synchronization in GSN (Library 1503).*

016-717 Fax Send Result Not Found RAP

016-717 The fax or internet fax send result information is not saved in the controller.

Procedure

WARNING

Ensure that the electricity to the machine is switched off while performing tasks that do not need electricity. Refer to GP 10. Disconnect the power cord. Electricity can cause death or injury. Moving parts can cause injury.

Perform the steps that follow:

1. Have the customer:
   a. Split any internet fax documents that would exceed 2GB in document storage size into several jobs and control the usage amount of memory.
   b. If there is a large amount of scan or internet fax documents being processed, wait until the other jobs are completed before performing additional jobs.
2. Upgrade the software, GP 4.
3. Check the wiring between the ESS PWB, PL 18.1A Item 5 (B400) or PL 18.1B Item 5 (B405) and the HDD, PL 18.1A Item 91 (B400) or PL 18.1B Item 91 (B405).
4. Initialise the hard disk. Refer to dC355 Hard Disk Diagnostics.
5. Perform GP 25, Function 03. NVRAM INIT MODE.

CAUTION

When installing a new ESS PWB and a new MCU PWB at the same time, first install the new ESS PWB, by following REP 18.1 (B405), REP 18.2 (B400). If the new ESS PWB installation is successful, switch off the machine, GP 10. Then, install the new MCU PWB.

6. If the fault persists, install new components as necessary:
   - HDD, PL 18.1A Item 91 (B400) or PL 18.1B Item 91 (B405).
   - ESS PWB, PL 18.1A Item 5 (B400) or PL 18.1B Item 5 (B405).
   - MCU PWB, PL 18.2 Item 2.

   NOTE: *If the fault persists after startup, perform dC132 to verify all numbers match. Go to Serial Number Re-Synchronization in GSN (Library 1503).*

016-718 Out of PCL6 Memory RAP

016-718 Insufficient PCL6 decomposer memory.

Procedure

Perform the steps that follow:

1. Have the customer decrease the resolution to reduce the PLW memory.
2. If the fault persists, upgrade the software, GP 4.

016-719 Out of PCL Memory RAP

016-719 An insufficient memory was detected while using the PCL.

Procedure

Perform the steps that follow:

1. Have the customer increase the PCL memory size. Increasing the memory for the whole system will increase the memory to be allocated to the Decomposer in some measure.
2. If the fault persists, upgrade the software, GP 4.

016-720 PCL Command Error RAP

016-720 A PCL command error occurred during PCL processing.

Procedure

Perform the steps that follow:

1. Have the customer cancel the job then execute the command again.
2. If the fault persists, upgrade the software, GP 4.

016-721 to 016-724 Settings Error RAP

016-721 Paper types cannot be determined because all the settings for custom paper priority are set to disabled.

016-722 Staple position that is not supported by this machine or a paper size that is not supported by the Finisher was specified.

016-723 Punch position that is not supported by this machine or the paper size that is not supported by the Finisher was specified.

016-724 Job canceled due to invalid combination of staple and punch positions.

Procedure

Perform the steps that follow:

1. Have the customer correct the settings, then execute the command again.
2. If the fault persists, upgrade the software, GP 4.

016-725 B-Formatter Library Image Conversion Error RAP

016-725 An error has occurred in the B-Formatter during the image conversion of scanned document to fax sending document.

Procedure

Perform the steps that follow:

1. Have the customer directly scan the document and send it to the fax recipient.
2. If the fault persists, upgrade the software, GP 4.

016-726 PDL Auto Switch Fail RAP

016-726 Print language auto judgment fail.

Procedure

Perform the steps that follow:

1. Have the customer fix, then select the decomposer from the UI or with a command.
2. If the fault persists, upgrade the software, GP 4.

016-727 Unstorable Document RAP

016-727 The 0 page condition is detected in the print job mailbox storage.

Procedure

Perform the steps that follow:

1. Have the customer to switch off paper saving, then print the job again.
2. If the fault persists, upgrade the software, GP 4.

016-728 Unsupported TIFF Data RAP

016-728 Unsupported TIFF data.

Procedure

For information only, no service action necessary. Refer the customer to the User Guide.

016-729 TIFF Data Size RAP

016-720 The files to be spooled in the TIFF exceeded the disk capacity.

Procedure

Perform the steps that follow:

1. Have the customer refer to the User Guide to correct the valid range.
2. If the fault persists, upgrade the software, GP 4.

016-731, 016-732 Invalid Data RAP

016-731 The TIFF data is broken or discontinued halfway.

016-732 The decomposer detected that the form specified is not registered.

Procedure

Perform the steps that follow:

1. Have the customer resend the data or form data.
2. If the fault persists, upgrade the software, GP 4.

016-733 Destination Address Resolution Error RAP

016-733 A failure to resolve a P2P address problem (before connection to the server).

Procedure

Perform the steps that follow:

1. Have the customer:
   a. Check if the destination address has been entered correctly.
   b. Set a correct DNS server address.
2. Upgrade the software, GP 4.
3. If the fault persists, perform the 016A Workflow Scanning Error Entry RAP.

016-735 Updating Job Template RAP

016-735 The system attempted to output the job template list while the job template was being updated.

Procedure

Perform the steps that follow:

1. Have the customer perform the operation again after the Job Template update completes.
2. If the fault persists, upgrade the software, GP 4.

016-738, 739, 740 Booklet Size RAP

016-738 Invalid paper size for PS booklet print.

016-739 The combination of the specified document/paper sizes is incorrect.

016-740 The specified tray is invalid.

Procedure

Perform the steps that follow:

1. Have the customer specify the correct settings that allow booklet printing.
2. If the fault persists, upgrade the software, GP 4.

016-741 Download Mode Fail RAP

016-741 Not able to change into download mode.

Procedure

Perform the steps that follow:

1. Have the customer cancel the download prohibited mode then check that the jobs have completed before retrying the operation.
2. Enter dC131. Set NVM value 700-420 to 0, the retry the operation.

016-742 Download Data Product ID Mismatch RAP

016-742 A mismatch in the product ID of download data was detected.

Procedure

Have the customer obtain the download data again, then retry the job.

016-743 Device Model/Panel Type Error RAP

016-743 The supported model in the download data does not match the device model.

Procedure

Have the customer source a download file that has the same model with the device VerUP then retry the job.

016-744 Download Data CheckSum Error RAP

016-744 CheckSum error of download data.

Procedure

Perform the steps that follow:

1. Ensure that the cable connected to the device is secured correctly, then retry the job.

016-745 Download Data XPJL Fatal Error RAP

016-744 XPJL fatal error during download.

Procedure

Switch off, then switch on the machine, GP 10.

016-746, 016-751 Unsupported PDF File RAP

016-746 PDF error due to unsupported function sent.

016-751 Syntax error, usage of undefined command, parameter error, damaged PDF file, internal error of the PDF decomposer has occurred during PDF bridge process.

Procedure

Perform the steps that follow:

1. Have the customer print via the driver from Acrobat Reader.
2. Ipgrade the software, GP 4.
3. If the fault persists, perform the 016A Workflow Scanning Error Entry RAP.

016-747 Drawing Annotation Memory RAP

016-747 When drawing an annotation image with the copy repeat function specified, there would be insufficient memory.

Procedure

Perform the steps that follow:

1. Have the customer:
   a. Increase the annotation image size.
   b. Reduce the number of repeat images for the repeat function.
2. If the fault persists, upgrade the software, GP 4.

016-748, 774, 775, 778, 981 HDD Full RAP

016-748 HDD full when mailbox is accessed.

016-774 Disk full was detected when opening/writing file for compression type conversion.

016-775 Disk full was detected when opening/writing file for image processing operation.

016-778 HDD full was detected when opening/writing file for operation.

016-981 When accessing it, the HDD is detected being full.

Procedure

Perform the steps that follow:

1. Have the customer:
   a. Split the job into pages in order to prevent the full state. Reduce the resolution if possible.
   b. Delete documents that are no longer needed, such as; mailbox documents, fax send wait documents, secure print documents and delayed print documents.
   c. Retrieve each page from the EWS.
2. Initialise the HDD. Refer to dC355 Hard Disk Diagnostics.
3. Install a new HDD, PL 18.1A Item 91 (B400) or PL 18.1B Item 91 (B405).
4. If the fault persists, upgrade the software, GP 4.

016-749 JCL Syntax Error RAP

016-749 The PJL/XPJL detected a print language that cannot be printed.

Procedure

Perform the steps that follow:

1. Have the customer:
   a. Use the printer driver of the machine to print.
   b. Not use ContentsBridge to print a PDF file.
   c. Request the other party to resend the internet fax document using a print language that can be printed by the machine.
2. If the fault persists, upgrade the software, GP 4.

016-750 Print Job Ticket Description Error RAP

016-750 When the customer uses applications such as 'ContentsBridge2005', etc. to send PDF directly, the machine received the print job ticket that was sent together with the PDF. However, the print job ticket data has text that is not supported in this machine or print instruction that is not supported by the machine.

Procedure

Perform the steps that follow:

1. Have the customer refer to the user Guide.
2. If the fault persists, upgrade the software, GP 4.

016-752 PDF Short of Memory RAP

016-752 Insufficient memory was detected during PDF bridge processing.

Procedure

Perform the steps that follow:

1. Have the customer:
   a. Change the print mode. When the print mode is set to High Quality, change the setting to Normal. When the print mode is set to Standard, change the setting to High Speed.
   b. Print using a driver from Acrobat Reader.
2. If the fault persists, upgrade the software, GP 4.

016-753 PDF Password Mismatched RAP

016-753 When processing a PDF file that is protected by a password, the password in the UI panel settings and the password specified using XPJL (set in the contents bridge utility) do not match.

Procedure

Perform the steps that follow:

1. Have the customer specify the correct password using the UI or the contents bridge.
2. If the fault persists, upgrade the software, GP 4.

016-755 PDF Print Prohibited RAP

016-755 The system processed a PDF file prohibited for printing.

Procedure

Perform the steps that follow:

1. Have the customer use Acrobat to clear the print prohibition setting then print the PDF file.
2. If the fault persists, upgrade the software, GP 4.

016-756 Auditron Prohibited Service RAP

016-756 Illegal User Detected

Procedure

Perform the steps that follow:

1. Have the customer request the Account Administrator for access to use the service.
2. If the fault persists, upgrade the software, GP 4.

016-757 Auditron Invalid User RAP

016-756 The account has not been registered.

Procedure

Perform the steps that follow:

1. Have the customer set the correct account, then resubmit the job.
2. If the fault persists, upgrade the software, GP 4.

016-758 Auditron Disabled Function RAP

016-758 An illegal account was detected.

Procedure

Perform the steps that follow:

1. Have the customer:
   a. Set the new function that is allowed for that account then try again.
   b. Request the Account Administrator to add the rights.
2. If the fault persists, upgrade the software, GP 4.

016-759 Auditron Limit Reached RAP

016-759 The number of registered users reached the limit.

Procedure

Perform the steps that follow:

1. Advise the customer to request the Account Administrator to delete unused user accounts.
2. If the fault persists, upgrade the software, GP 4.

016-760 PS Decompose Failure RAP

016-760 An error occurred in decompose processing.

Procedure

Perform the steps that follow:

1. Have the customer resubmit the job.
2. If the fault persists, upgrade the software, GP 4.

016-761 FIFO Empty RAP

016-761 Image enlargement error (FIFO empty).

Procedure

Perform the steps that follow:

1. Have the customer print in the high speed mode. If the fault persists, use print guaranteed mode.
2. If the fault persists, upgrade the software, GP 4.

016-762 Print Language Not Installed RAP

016-762 The system requested functions (print language, print utility, etc.) that are not installed.

Procedure

Perform the steps that follow:

1. Have the customer correct then select the decomposer from the UI or with a command.
2. If the fault persists, upgrade the software, GP 4.

016-763 POP Server Connect RAP

016-763 The machine cannot connect to the POP server.

Procedure

Have the customer:

1. Print a configuration report and confirm that the DNS settings are correct.
2. Confirm that the POP3 server settings are correct.
3. Enter the IP Address of their POP3 server into the machine.
4. If the fault persists, refer the customer to the System Administrator Guide to check that the machine is correctly configured.

016-764 SMTP Server Connect RAP

016-764 The machine failed to connect to the SMTP server.

Procedure

Have the customer:

1. Print a configuration report and confirm that the DNS settings are correct.
2. Confirm that the SMTP server settings are correct.
3. Enter the IP Address of their SMTP server into the machine.
4. If the fault persists, refer the customer to the System Administrator Guide to check that the machine is correctly configured.

016-765, 016-766 SMTP Server Error RAP

016-765 The SMTP server HDD is full.

016-766 The memory capacity allocated by the SMTP server is exceeded.

Procedure

Have the customer:

1. Delete jobs on their server because the machine is receiving communication from their SMTP (email) server that the server disk drive or mailboxes are full.
2. Refer to the product's System Administrator Guide to be sure that the machine is properly configured if the fault persists.

016-767 Invalid Email Address RAP

016-767 The system detected that the E-mail destination address is incorrect.

Procedure

Perform the steps that follow:

1. Have the customer check a specific mail addressor set a correct address.
2. If the fault persists, upgrade the software, GP 4.

016-768 Invalid Sender Address RAP

016-768 The SMTP server refused to accept the sender address.

Procedure

1. Advise the customer to check that the sender address is correct.
2. Ensure the correct SMTP authentication settings have been enabled.
3. Check the SMTP username and password are correct.

016-769 SMTP Server Unsupported DSN RAP

016-769 The SMTP server refused to accept the sender address.

Procedure

Have the customer contact the network administrator for advice and ensure that the SMTP server supports DSN.

016-770 Direct Fax Function Canceled RAP

016-770 The direct fax function is canceled by NVM.

Procedure

1. Have the customer release the direct FAX job prohibition (set the target system to 0).
2. Obtain the job logs (UI, Report, CWIS, SSMI applications).

016-772 Scan Data Repository Error RAP

016-772 An error occurred while recalling the DNS resolution library.

Procedure

Perform the steps that follow:

1. Have the customer set the DNS address. Or, set the scan data repository address using IP address.
2. Upgrade the software, GP 4.
3. If the fault persists, perform the 016A Workflow Scanning Error Entry RAP.

016-776 Image Conversion Error RAP

016-776 Error due to other than HDD access during image conversion processing by S-formatter.

Procedure

Perform the steps that follow:

1. Have the customer:
   a. If a failure occurred during Salutation/Fax to Email, attempt to retrieve each page from the mailbox via the web browser.
   b. For occurrences when the password, or signature is specified by the Digital Certificate, perform the steps that follow.
      - Check the validity of the certificate.
      - Set the correct date and time of the device.
   c. When scanning is done with the TWAIN driver, change the file format to JFIF, single-page TIFF.
   d. Switch off FIPS mode, or remove PDF encryption setting in the instructions document.
   e. Set to Single File for Each Page, or set the Image Format setting to Drawing Object.
2. If the fault persists, perform the 016A Workflow Scanning Error Entry RAP.

016-779 Scan Image Conversion Error RAP

016-779 An error was detected in the Image conversion library.

Procedure

Perform the steps that follow:

1. Have the customer:
   a. Repeat the operation.
   b. Reduce the scan resolution to 400dpi or less then repeat the operation.
2. Upgrade the software, GP 4.

016-781 Server Connect Error RAP

016-781 SMTP server not found.

Procedure

Perform the steps that follow:

1. Have the customer:
   a. Correctly set the subnet mask and gateway.
   b. From the destination server, ping the machine.
   c. Check whether characters other than ASCII are set for the host name of the device. Set the host name of the device to ASCII characters.
2. If the fault persists, perform the 016A Workflow Scanning Error Entry RAP.

016-786 HDD Full Scan Write Error RAP

016-786 When performing the scan function, files cannot be written in the HDD.

Procedure

WARNING

Ensure that the electricity to the machine is switched off while performing tasks that do not need electricity. Refer to GP 10. Disconnect the power cord. Electricity can cause death or injury. Moving parts can cause injury.

Perform the steps that follow:

1. Switch off, then switch on the machine, GP 10.
2. Ensure all paper trays are loaded.
3. If this occurs when sending email, have the customer:
   – Reduce the resolution then resend it.
   – Reduce the size then resend it.
   – Reduce the number of pages and separate the job into several batches when sending.
   – Set the output color to Black then resend it.
4. Check the wiring between the ESS PWB, PL 18.1A Item 5 (B400) or PL 18.1B Item 5 (B405), and the HDD, PL 18.1A Item 91 (B400) or PL 18.1B Item 91 (B405).
5. Initialise the HDD. Refer to dC355 Hard Disk Diagnostics.
6. Upgrade the software, GP 4.
7. Install a new HDD, PL 18.1A Item 91 (B400) or PL 18.1B Item 91 (B405).

016-788 Retrieve to Browser Failed RAP

016-788 SMTP server not found.

Procedure

Perform the steps that follow:

1. Switch off, then switch on the machine, GP 10.
2. Have the customer:
   a. Reload the browser page then perform retrieval operation again.
   b. Re-activate the browser, then perform retrieval operation again.
   c. Improve the connection status to a network.
   d. Check whether there are problems such as duplicated IP addresses.
3. If the fault persists, perform the 016A Workflow Scanning Error Entry RAP.

016-790 Email Fragment Over RAP

016-790 Email fragment quantity is over spec.

Procedure

Perform the steps that follow:

1. Have the customer:
   a. Reduce resolution (image to send quality), then resend the job.
   b. Reduce magnification, then resend the job.
   c. Increase the maximum fragment quantity.
2. If the fault persists, perform the 016A Workflow Scanning Error Entry RAP.

016-792 Specified Job Not Found RAP

016-792 An error was detected in the Image conversion library.

Procedure

Perform the steps that follow:

1. Have the customer repeat the operation.
2. If the fault persists, upgrade the software, GP 4.

016-794 Media Not Inserted RAP

016-794 Media not inserted.

Procedure

Perform the steps that follow:

1. Have the customer check that the media is inserted.
2. If the fault persists, upgrade the software, GP 4.

016-795 Media Reader Format Error RAP

016-795 The MediaLib detected this error while performing the operation that requires access to media.

Procedure

Perform the steps that follow:

1. Have the customer check the media content from the PC. Check the file format/directory in the media and the selected mode (Digital Camera Print/Document Print), then reset the settings.
2. If the fault persists, upgrade the software, GP 4.

016-796 Document Insert Operation Error RAP

016-796 The MediaLib detected this error while performing the operation that requires access to Media.

Procedure

Perform the steps that follow:

1. Have the customer check the me dis content from the PC. Check whether the print file attribute data is displayed on the PC, then reset the settings.
2. If the fault persists, upgrade the software, GP 4.

016-797 Image File Read Error RAP

016-797 The MediaLib detected this error while performing the operation that requires access to media.

Procedure

Perform the steps that follow:

1. Have the customer check the me dis content from the PC. Check whether the print file images are displayed on the PC, then reset the settings.
2. If the fault persists, upgrade the software, GP 4.

016-799 PLW Print Instruction Fail RAP

016-799 The specified print parameter is abnormal.

Procedure

Perform the steps that follow:

1. Have the customer repeat the operation.
2. Upgrade the software, GP 4.
3. If the fault persists, perform the 016A Workflow Scanning Error Entry RAP.

016-910, 016-911 Required Resource Not Ready RAP

016-910 The paper and staples requested by the selected print parameters are not installed.

016-911 The paper and staples requested by the print specification are not loaded or different sizes and/or types of paper switching are requested from the same tray.

Procedure

Perform the steps that follow:

1. Have the customer correctly load paper or install the staples.
2. If the fault persists, upgrade the software, GP 4.

016-940 to 016-949 Incorrect Job Settings RAP

016-940 Different size settings for side 1 and side 2 were detected after the job had started with 2-Sided Print specified.

016-941 Mixed size/direction set for the page with images was detected after the job had started with Booklet specified.

016-942 Different size settings for side 1 and side 2 were detected after the pages with 2-Sided Print specified had been deleted.

016-943 Different size settings for side 1 and side 2 were detected after the document and separators had been inserted for the pages with 2-Sided Print specified.

016-944 The document collate setting for the pages including the cover with images or the document with separators with Document Attachment specified was detected.

016-945 The documents that do not support 2-Sided Print has been inserted for the pages for 2-Sided Print.

016-946 A document or separator has been inserted between Cover pages or Separator pages.

016-947 The system detected that no tray is loaded with paper for Auto Paper Selection after the job for which the paper for APS (Auto Paper Selection) was selected or APS was set has started.

016-948 The covers with images, separators, or blank pages were detected after the job had started with Booklet specified.

016-949 The document with a different size/orientation from the operated page was tried to be inserted for the job with Attachment specified.

Procedure

Perform the steps that follow:

1. have the customer re-submit the job with the correct settings.

016-981 HDD Access Error RAP

016-981 HDD Full was detected because Mailbox Scan, Fax Scan, Secure Print, Delay Print, Sample Print, or Scheduled Print was specified when the HDD partition/ide0c capacity is small.

Procedure

Perform the steps that follow:

1. Have the customer:
   a. Process or delete the jobs (documents) stored in the same HDD partition, then repeat the operation.
   b. If step A does not resolve the problem, expand the HDD partition size of the relevant service.
2. Upgrade the software, GP 4.
3. Check the wiring between the ESS PWB, PL 18.1A Item 5 (B400) or PL 18.1B Item 5 (B405), and the HDD, PL 18.1A Item 91 (B400) or PL 18.1B Item 91 (B405).
4. Initialise the HDD. Refer to dC355 Hard Disk Diagnostics.
5. Install a new HDD, PL 18.1A Item 91 (B400) or PL 18.1B Item 91 (B405).

016-982 HDD Access Error 2 RAP

016-982 HDD was determined to be full due to collate, stored or interrupted jobs.

Procedure

Perform the steps that follow:

1. Have the customer:
   a. Process or delete the jobs (documents) stored in the same HDD partition, then repeat the operation.
   b. If step A does not resolve the problem, expand the HDD partition size of the relevant service.
2. Upgrade the software, GP 4.
3. Check the wiring between the ESS PWB, PL 18.1A Item 5 (B400) or PL 18.1B Item 5 (B405), and the HDD, PL 18.1A Item 91 (B400) or PL 18.1B Item 91 (B405).
4. Initialise the HDD. Refer to dC355 Hard Disk Diagnostics.
5. Install a new HDD, PL 18.1A Item 91 (B400) or PL 18.1B Item 91 (B405).

016-983 Image Log HDD Full RAP

016-983 With the system data level of ensuring log image creation set to High, the log image storage area on the disk becomes full (during processing a copy/scan job).

Procedure

Have the customer:

1. Cancel the job.
2. Re-run the job.
3. Delete unnecessary documents saved in the device or change the level of ensuring creation (to Low).

016-985 Scan to Email Data Size RAP

016-985 Scan to email data size exceeded.

Procedure

Perform the steps that follow:

1. Have the customer reduce the number of documents, reduce the resolution, or increase the compression ratio if the job is multi-value scan.
2. If the fault persists, upgrade the software, GP 4.

016A Workflow Scanning Error Entry RAP

Use this RAP when the customer reports network failures. e.g. cannot connect to the scan server when using the FTP or SMB protocols or when a folder on the scan server cannot be opened.

Initial Actions

Consult with your manager before troubleshooting the customer's network, as the policy varies according to region. Also consult with the customer's IT personnel or system administrator.

Procedure

NOTE: *Network errors can be complex to diagnose and resolve. Actions are limited to checking for fundamental faults and to collect system information, before contacting 2nd level support.*

NOTE: *If it is possible to log in to the Embedded Web Server by entering the IP address of the device, then the network controller on the ESS PWB is good.*

Check that the date and time are set correctly on the device, refer to GP 14 How to Set the Date and Time. **The time and date are correct.**

Y **N**

Set the time and date parameters correctly.

Check the LED link lights at the ESS PWB ethernet connection. **The LEDs illuminate.**

Y **N**

If possible, perform the following to try and eliminate the problem of a faulty network port:

- Check the connections at the network port and ESS PWB are good.
- Connect the device to another network port.
- Have the customer a provide a new network port to ESS PWB cable.
- Check the operation of a known good device to the network port.

If the fault persists, install a new ESS PWB, PL 18.1A Item 5 (B400)/PL 18.1B Item 5 (B405). **The LEDs illuminate.**

Y **N**

Advise the customer to contact Escalated Software Support.

Perform the Final Actions.

Perform the Final Actions.

Final Actions

Perform the steps that follow:

1. Attempt to ping the device:
   a. Print a configuration report to obtain the IP address of the device, GP 22 Printing Reports.
   b. From an internet connected PC or laptop, open a command window (CMD):
      - If running Windows XP, click on **Start**, then select **Run**. Type **CMD** in the Run dialog box, then press **Enter**.
      - If running Windows 7, select **Start** and in the Search box above the Start button, type **CMD**, then press **Enter**.

        NOTE: *If the Windows key is enabled (the key located in the lower left corner with the Microsoft logo), hold the Windows key down, press R and release both keys to open the* Command window.
   c. In the Command window (where the blinking cursor is) type ping. Press the space bar once, then enter the IP address of the device. Press **Enter**.
   d. If the ping command is successful, the device will reply four times. This should not take more than two or three seconds.
   e. If the ping command times out, or responds with 'host unreachable', check the IP address that was entered. If the IP address is correct, advise the customer to contact Escalated Software Support.
2. Attempt to send a scan job from the device, if the scan to job did not complete, advise the customer to contact Escalated Software Support.

017-500 Job Limit Illegal Response RAP

017-500 Invalid response from job limit server.

Procedure

Have the customer:

1. Check the job parameter settings, then re-run the job.
2. Check the response packet from the job limit server.

017-501 Multiple Permission Restrictions RAP

017-501 A print rights violation has occurred.

Procedure

Have the customer change the user privileges.

017-503 Password Over Maximum RAP

017-503 Password has exceeded maximum number of digits.

Procedure

Have the customer lower the number of password digits.

017-514 Inhibited Version RAP

017-514 The ESS PWB and software version are incompatible.

Procedure

Perform the steps that follow:

1. Switch off, then switch on the machine, GP 10.
2. Install controller software XX.2X.XX or above.

017-713 Start TLS Unsupported Fail RAP

017-713 Start TLS unsupported fail.

Procedure

Have the customer change the SSL operation mode setting to other than STARTTLS mode.

017-714 SMTP Over SSL Fail RAP

017-714 SSL communication failure with SMTP server.

Procedure

Perform the steps that follow:

1. Have the customer check if this occurred in TLS Mode, it may be due to an incorrect port number. Check the Port Number settings of the SMTP Server.
2. Ensure that the SSL or TLS encryption type matches the selected port.
3. If the fault persists, reload the software, GP 4.

017-715 SSL Certificate Fail RAP

017-715 An SSL Server Authentication Error has occurred because there is something wrong in the Server Certificate Data.

Procedure

Have the customer register the root certificate of the SMTP server SSL certificate in the machine.

017-716, 717, 718 SSL Certificate (SMTP) Fail RAP

017-716 The validity period of the server certificate has not started.

017-717 The validity period of the server certificate has expired.

017-718 The server name does not match the server address of the server certificate.

Procedure

Have the customer:

1. Check that the SMTP server clock and machine clock are correct.
2. Check the validity period of the SMTP server certificate.
3. Check that the server name that are registered in the SMTP server certificate and the server address are correct.
4. If the clocks are correct, change the SMTP server SSL certificate to one that is valid.

   NOTE: *This problem can also be fixed by switching off the machines SSL Server Verification setting. This will render the machine unable to guarantee the authenticity of the SMTP server that it is connecting to.*

017-719 SMTP Over SSL Internal Fail RAP

017-719 Internal software error has occurred during SMTP over SSL process.

Procedure

Perform the steps that follow:

1. Have the customer repeat the operation.
2. If the fault persists, reload the software, GP 4.

017-720, 017-721 PJL Command Fail RAP

017-720 Contract type value is incorrect.

017-721 Geographic region value is incorrect.

Procedure

Have the customer correct the contract type or geographic region value specified by PJL command, then try again.

017-722 Total Impressions Over Fail RAP

017-722 The total impressions of billing meter in the data for PJL diag is 9,999,900 or more.

Procedure

Have the customer perform the operation when the value of total impressions is between 0 and 9,999,900.

017-723 DocuWorks Unsupported Character Fail RAP

017-723 When the DocuWorks decomposer is working, it detected some text that cannot be output is in use.

Procedure

Perform the steps that follow:

1. Have the customer print from the DocuWorks viewer using the print driver (ART-EX, PCL, etc.).
2. If the fault persists, reload the software, GP 4.

017-725 Forced Annotation Syntax Fail RAP

017-725 Syntax error in Forced Annotation instructions is detected.

Procedure

Perform the steps that follow:

1. Have the customer check the driver settings.
2. If the fault persists, reload the software, GP 4.

017-728 Scan Job Flow Document Fail RAP

017-728 MS Word or MS Excel is specified as the output format in the instructions, but the target document for processing does not possess the conditions required for format processing.

Procedure

Perform the steps that follow:

1. Have the customer:
   a. Change output format to other than MS Word, MS Excel.
   b. Start Job Flow Service after satisfying all conditions below:
      - The document for processing is a scan document.
      - The document for processing is full color.
      - Size of the document for processing is 50x50mm or more, 297x432mm or less.
      - Color space of the document for processing is standard color space.
      - Resolution of the document for processing is 300dpi.
      - Magnification of the of the document for processing is 100%.
2. If the fault persists, reload the software, GP 4.

017-729 Temporary Error in PDL Transfer RAP

017-729 Temporary inability to send due to maximum jobs exceeded at the destination device, or spool area of print data full, etc.

Procedure

Have the customer:

1. Set the spooling of the print data at the destination device to hard disk.
2. Change spooling setting to Spool to Hard Disk.

017-730 Network Error in PDL Transfer RAP

017-730 Network occurred during PDL data transfer.

Procedure

Have the customer:

1. Check the connection of the network cable.
2. Check the destination device is powered on.
3. Check that the IPP port of the destination device is enabled.

017-731 POP Server Not Connected RAP

017-731 Failed to connect to the POP server.

Procedure

Perform the steps that follow:

1. Have the customer check that network communication between the POP server and the machine is available:
   a. Check that the POP server IP address that is set in the device is correct.
   b. Check the connection of network cables.

017-732 Offline Error in PDL Transfer RAP

017-732 Unable to send because destination printer is offline.

Procedure

Have the customer disable the offline status of the destination device.

017-733 Internal Error in PDL Transfer RAP

017-733 Unable to send because destination printer is offline.

Procedure

Have the customer repeat the operation.

017-734 IPP Data Error RAP

017-734 Syntax error, usage of undefined command, parameter error, damage of the file, or internal error of the decomposer has occurred during the decomposer process of a direct print job that used IPP in its network protocol.

Procedure

Perform the steps that follow:

1. Have the customer print by using a different print method (printer driver or utility other than print from IPP) that is supported by the device.
2. If the fault persists, reload the software, GP 4.

017-735 Unauthorized Auditron User RAP

017-735 Unauthorized user is detected.

Procedure

Perform the steps that follow:

1. Have the customer get permission to use the device from the account administrator.
2. If the fault persists, reload the software, GP 4.

017-737 Custom Transfer Out of Memory RAP

017-737 A HDD unavailable error was returned when the decomposer called the S-image library.

Procedure

Perform the steps that follow:

1. Have the customer deactivate or delete all unnecessary plug-ins.
2. Switch off, then switch on the machine, GP 10.
3. Initialise the hard disk. Refer to dC355 Hard Disk Diagnostics.

017-738, 017-746 HDD Internal Fail RAP

017-738 The system detected that the JVM has stopped due to internal error.

017-746 Custom transfer plug-in local disk malfunction.

Procedure

Perform the steps that follow:

1. Switch off, then switch on the machine, GP 10.
2. Initialise the hard disk. Refer to dC355 Hard Disk Diagnostics.

017-739, 017-740 Transfer Service Not Available RAP

017-739 Custom transfer XCP not activated error.

017-740 Custom transfer plug-in not activated error.

Procedure

Have the customer:

1. Enable the embedded plug-in feature.
2. Input the software key for the customization kit.

017-741 Custom Transfer Invalid Plug-In RAP

017-741 The instruction that was specified by the instruction set to the plug-in and the feature provided by the plug-in (API) are mismatched when the custom transfer job is in progress.

Procedure

Have the customer:

1. Upgrade the embedded plug-in feature (install the latest version).
2. Check the contents of the instruction set that is being used. If the instruction set was generated by a custom service, revise the custom service contents.

017-742, 743, 744 Custom Transfer Plug-In Connection RAP

017-742 Custom transfer plug-in server connection error.

017-743 Custom transfer plug-in authentication error.

017-744 Custom transfer plug-in server access error.

Procedure

Have the customer:

1. Check whether the transfer destination server, etc. and the machine are able to communicate via the network.
2. Check whether it is possible to log in to the transfer destination server, etc. by using the specified user name and password.
3. Check whether it is possible to log in to the transfer destination server, etc. by using the specified user name and password.

017-745 Custom Transfer Plug-in Disk Full RAP

017-745 Insufficient hard disk area for processing was detected.

Procedure

Perform the steps that follow:

1. Have the customer take any one of the actions that follow:
   a. Lower the resolution, then re-send.
   b. Reduce the size, then re-send.
   c. Reduce the page count, then re-send the job in several batches.
   d. Change the output color to black and white, then re-send.

017-747 Custom Transfer Plug-In Connection Timeout RAP

017-747 Custom transfer plug-in communication timed out error.

Procedure

Have the customer:

1. Wait a while, then re-run the job.
2. If the situation does not improve, consult with the Network Administrator.

017-748 Custom Transfer Plug-In Invalid Device RAP

017-748 Custom transfer plug-in invalid device settings data error.

Procedure

Have the customer check the device settings required for file transfer.

017-749 Custom Transfer Plug-In XML Fail RAP

017-749 When extracting the custom transfer parameter from XML file, the obtaining of the parameter has failed, the parameter format is inconsistent, or the parameter value cannot be processed due to wrong grammar.

Procedure

Have the customer check the contents of the instruction set that is being used. If the instruction set was generated by a custom service, revise the custom service contents.

017-750 Custom Transfer Plug-In Internal Fail RAP

017-750 An internal logic error was detected in the custom transfer plug-in.

Procedure

Perform the steps that follow:

1. Have the customer revise the custom transfer plug-in and then reinstall it.
2. Switch off, then switch on the machine, GP 10.

017-751 Custom Transfer Plug-In Other Fail RAP

017-751 An error specific to the custom transfer plug-in was detected.

Procedure

Have the customer refer to the error details in the job undelivered transmission report, then take appropriate action.

017-755 Software Download Via Network Fail RAP

017-755 A software download via the network was performed when the software download via network set as prohibited.

Procedure

Perform the steps that follow:

1. Either set the software download via network to allowed or perform the software download using a USB.
2. If the fault persists, reload the software, GP 4.

017-759 Download Data Inspection Error RAP

017-759 Electronic signature verification error of download data.

Procedure

Have the customer re-obtain the download data then perform the operation again.

017-760, 017-766 POP Over SSL Fail RAP

017-760 SSL communication failure with POP server.

017-766 SSL communication failure with POP Server.

Procedure

Perform the steps that follow:

1. If this had occurred in TSL mode, it may be due to different port number. Have the customer check the port number settings of the POP server.
2. If the fault persists, reload the software, GP 4.

017-761, 017-767 SSL Server Cert Untrusted (POP) RAP

017-761 An SSL server authentication error has occurred as there is something wrong in the server certificate data.

017-767 An SSL server authentication error has occurred as there is something wrong in the server certificate data.

Procedure

The machine is unable to trust the SSL certificate of the POP server. Have the customer register the root certificate of the POP server SSL certificate in the machine.

017-762, 763, 764, 768, 769, 770 SSL Certificate (POP) Fail RAP

017-762 The validity period of the server certificate has not started yet.

017-763 The validity period of the server certificate has expired.

017-764 The server name does not match the server address of the server certificate.

017-768 The validity period of the Server Certificate has not started yet.

017-769 The validity period of the server certificate has expired.

017-770 The server name does not match the server address of the server certificate.

Procedure

Have the customer:

1. Check that the clock of the POP server and the machine are correct. If the clock is correct, change the POP server SSL certificate to one that is valid.
2. Check the validity period settings of the POP server certificate.
3. Check that the server name that are registered in the POP server certificate and the server address are correct.

   NOTE: *This problem can also be fixed by switching off the machines SSL Server Verification setting. This will render the machine unable to guarantee the authenticity of the POP server that it is connecting to.*

017-765, 017-771 POP Over SSL Internal Fail RAP

017-765 Software internal error has occurred when POP over SSL process is in progress.

017-771 Software internal error has occurred when POP over SSL process is in progress.

Procedure

Have the customer repeat the operation.

017-772 Scan All Blank Page Fail RAP

017-772 It was detected that all the pages are blank.

Procedure

Have the customer:

1. Darken the density during scan.
2. Turn off the blank suppression instruction.

017-773 Netlog Task Error RAP

017-773 Detected fatal error during Netlog operation.

Procedure

Have the customer check the setting related to the Netlog function.

017-774 Message Lost Error RAP

017-774 Message discard error.

Procedure

For information only, no service action necessary.

017-775 Network API Error RAP

017-775 Sending message was discarded due to sending API error.

Procedure

Have the customer check if there is any issues on the network route to the Syslog server.

017-776, 017-777 Syslog Server Error RAP

017-776 The sending message was discarded because the server sent an invalid response or did not respond.

017-777 The sending queue became full and discarded the message sending request.

Procedure

Have the customer check the status of the Syslog server, address value of the Syslog that is set to the device, whether there is an issue in the network route between the device and the Syslog server, or a network cable failure.

017-778 Queue Error RAP

017-778 The sending queue became full due to no IP address being set or assigned, and discarded the message sending.

Procedure

Have the customer check if the IP address of the machine is set.

017-779 Link Error RAP

017-779 Detected unplugged network cable on the device side.

Procedure

Check the connection state of the network cable.

017-780 Held Job Timeout RAP

017-780 Auto delete due to the timeout of held Job that has been overtaken.

Procedure

Perform the steps that follow:

1. Have the customer disable the auto delete setting or change the timer setting (1-7200 minutes) to an appropriate value.
2. Switch off, then switch on the machine, GP 10.

017-782, 784, 785, 786 Custom Image Processing Plug-In RAP

017-782 Detected mismatch of the version of image processing module.

017-784 Custom image processing XML error.

017-785 Detected an error that is custom image processing plug-in specific.

017-786 Image processing error of custom image processing plug-in.

Procedure

Perform the steps that follow:

1. Have the customer reinstall after correcting the custom image processing plug-in.
2. Switch off, then switch on the machine, GP 10.

017-783 Custom Image Processing Memory RAP

017-783 The operation was unable to continue due to the memory shortage of the image processing module that is executed in the controller.

Procedure

Perform the steps that follow:

1. Have the customer take any one of the actions that follow:
   a. Lower the resolution.
   b. Change the output color to black and white.
2. Switch off, then switch on the machine, GP 10.

017-787 Google Cloud Print Data Error RAP

017-787 Syntax error, undefined command, parameter error, file corruption, decomposer internal error occurred when the decomposer is processing at the Google Cloud Print processing path.

Procedure

Perform the steps that follow:

1. Advise the customer to resubmit the job.
2. Advise the customer to use a different print method supported by the machine (print driver, utility other than Google Cloud Print).
3. If the fault persists, reload the software, GP 4.

017-789 Job Limit Estimation Logic Fail RAP

017-789 During job limit estimate acquisition, a logic error was detected in the ComlDvm_GetEstimation.

Procedure

Have the customer check the job settings, then re-run the job.

017-790 to 017-799 Print Permission RAP

017-790 Color print made in a time zone that is prohibited.

017-791 Print made in a time zone that is prohibited.

017-792 Printing performed despite being prohibited.

017-793 Color printing performed despite being prohibited.

017-794 Print made from a prohibited application.

017-795 Color print made from a prohibited application.

017-796 Single sided print made from a prohibited application.

017-797 Print made from a paper tray that is prohibited.

017-798 Job type print made that is prohibited.

017-799 Single sided print made despite being prohibited.

Procedure

Have the customer set the permissions as required.

018-400 IPSEC Configuration Mismatch RAP

018-400 IPSEC error (setting mismatch).

Procedure

Have the customer clear the IPSEC setting mismatch and re-enable the IPSEC.

NOTE: *Mismatched IPSEC settings occur when the password is not set because the authentication method is set to pre-shared key, or when IPSEC certificate is not set because the authentication method is set to digital signature.*

018-405 User Account Disabled RAP

018-405 User account disabled error.

Procedure

Perform the steps that follow:

1. Advise the customer that there is a check mark at Account Invalid for the relevant user in the active directory of the LDAP authentication destination server. The server has been set to prohibit access from the relevant user.
2. Have the customer consult with the Server Administrator.

018-406 Setting Status of IP Address (IPv4) RAP

018-406 Setting state of the same IP address (IPv4).

Procedure

Perform the steps that follow:

1. Have the customer change the setting to a different IP address or change the DHCPv6 settings to allow automatic routing.
2. If the fault persists, perform the 016A Workflow Scanning Error Entry RAP.

018-407 Setting Status of IP Address (IPv6) RAP

018-407 Setting state of the same IP address (IPv6).

Procedure

Advise the customer to change the IP address or change the DHCPv6 settings to allow automatic routing.

018-408, 429, 430 Duplicate IPv4 Address RAP

018-408 The same IP address device as the IPv4 address of this machine exists on the network in the network environment where the Ether 2 side is connected.

018-429 The same IP address device as the IPv4 address of this machine exists on the network in the network environment where the Wireless Network adapter is connected.

018-430 The same IP address device as the IPv4 address of this machine exists on the network in the network environment where the WiFi Direct is connected.

Procedure

Perform the steps that follow:

1. Have the customer:
   a. Change the IPv4 address of this machine or the IPv4 address of the network upper apparatus.
   b. For manual address setting, ensure that the IP address specified by the client is not used in other places.
   c. Check the respective server setting environments with the client.
2. If the fault persists, perform the 016A Workflow Scanning Error Entry RAP.

018-409, 412, 413 Duplicate IPv6 Address 1 RAP

018-409 The same IP address device as the IPv6 of this machine exists on the network in the network environment where the Ether 2 is connected.

018-412 The same IP address device as the state-less auto setting address 2 of this machine exists on the network in the network environment where Ether 2 is connected.

018-413 The same IP address device as the IPv6 state-less auto setting address 3 of this machine exists on the network in the network environment where the Ether 2 is connected.

Procedure

Perform the steps that follow:

1. Have the customer:
   a. Change the IPv6 address of the network upper apparatus that is duplicated to resolve the IP address duplication.
   b. Check if the IP address that was set in state-less address auto setting is not used in other places.
2. If the fault persists, perform the 016A Workflow Scanning Error Entry RAP.

018-410, 018-411 Dynamic DNS Update Failure RAP

018-410 For Ethernet 2, failed to update the IPv4 address and host name to the DNS server.

018-411 For Ethernet 2, failed to update the IPv6 address and host name to the DNS server.

Procedure

Perform the steps that follow:

1. Have the customer:
   a. Check if the DNS server address is correctly set to the device.
   b. Check if the DNS server is set so that the dynamic DNS can be operated.
2. If the fault persists, perform the 016A Workflow Scanning Error Entry RAP.

018-414 Invalid IPv6 Address 2 RAP

018-414 The IPv6 manual setting address that was set in this machine in a network environment connected to Ether 2 is invalid.

Procedure

Perform the steps that follow:

1. Have the customer:
   a. Change the IPv6 manual setting address of this machine to the IPv6 address that can be used in the machine address.
   b. Check if the IPv6 address that was automatically set as manual address is a valid address.
2. If the fault persists, perform the 016A Workflow Scanning Error Entry RAP.

018-415 Duplicate IPv6 Address 3 RAP

018-415 The same IP address device as the IPv6 manual setting address of this machine exists on the network in the network environment where the Ether 2 is connected.

Procedure

Have the customer change the IPv6 manual setting address of this machine or the IPv6 address of the network upper apparatus.

018-416 Duplicate IPv6 Address 4 RAP

018-416 The same IP address device as the IPv6 link local address of this machine exists on the network in the network environment where Ether 2 is connected.

Procedure

Perform the steps that follow:

1. Have the customer:
   a. Change the IPv6 address of the network upper apparatus that is duplicated to resolve the IP address duplication.
   b. Check if the IPv6 address that was automatically set as link local address is not used in other places.
2. If the fault persists, perform the 016A Workflow Scanning Error Entry RAP.

018-424, 018-425 WPA Enterprise Certificate Fail 1 RAP

018-424 A wireless WPA-Enterprise authentication root certificate or client certificate is not stored in the machine.

018-425 The WPA-Enterprise authentication root certificate or client certificate cannot be used.

Procedure

Perform the steps that follow:

1. Have the customer:
   a. Store or reconfigure the root certificate or client certificate in the machine that will be used in wireless WPA-Enterprise authentication.
   b. If a WPA-Enterprise authentication root certificate or client certificate cannot be obtained, use a type of wireless security other than WPA-Enterprise.
2. If the fault persists, perform the 016A Workflow Scanning Error Entry RAP.

018-426 WPA Enterprise Certificate Fail 2 RAP

018-426 An irregularity was detected in the server certificate that was received during wireless WPA-Enterprise authentication execution. This includes when the server certificate cannot be referenced.

Procedure

Perform the steps that follow:

1. Have the customer:
   a. Check if the server certificate is within the expiration date and that the certificate type and signature algorithm are supported. Use an appropriate certificate.
   b. If a server certificate that satisfies the request cannot be used, use a type of wireless security other than WPA-Enterprise.
2. If the fault persists, perform the 016A Workflow Scanning Error Entry RAP.

018-427 Duplicate Wireless Network IP Address Range RAP

018-427 The same IP address range used on this machine is already being used on the Wireless Network.

Procedure

Perform the steps that follow:

1. Have the customer:
   a. Change the wireless IP address range of this machine or ensure the wireless IP address range is available on the network.
   b. For manual address range setting, ensure that the IP address range specified by the client is not used in other places.
   c. Check the respective server setting environments with the client.
2. If the fault persists, perform the 016A Workflow Scanning Error Entry RAP.

018-428 Wireless Module Connection Fail RAP

018-428 The printer failed to connect to the Wireless Network.

Procedure

Perform the steps that follow:

1. Switch off, then switch on the machine, GP 10.
2. if the fault persists, install new components as necessary:
   - Wireless adaptor, PL 18.1A Item 90.
   - ESS PWB, PL 18.1A Item 5.

018-431, 432, 433 Duplicate WiFi IPv6 Address 1 RAP

018-431 There is a device on the network with the same IP address as the machine's IPv6 ‘Auto Stateless Address 1’ or ‘DHCPv6 Auto Address’ in the network environment that WiFi is connected to.

018-432 There is a device on the network with the same IP address as the machine's IPv6 ‘Auto Stateless Address 2’ in the network environment that WiFi is connected to.

018-433 There is a device on the network with the same IP address as the machine's IPv6 ‘Auto Stateless Address 3’ in the network environment that WiFi is connected to.

Procedure

Perform the steps that follow:

1. Have the customer:
   a. Change the IPv6 address of the device on the network with the duplicate address resolve the problem.
   b. Check if the IPv6 address automatically set as the stateless address is being used somewhere else.
2. If the fault persists, perform the 016A Workflow Scanning Error Entry RAP.

018-434 Duplicate WiFi IPv6 Address 2 RAP

018-434 IPv6 ‘Manual Address’ set on the machine is invalid in the network environment that WiFi is connected to.

Procedure

Perform the steps that follow:

1. Have the customer:
   a. Change the machine's ‘IPv6 (Manual Address)’ to an IPv6 address that can be used for the machine's address.
   b. Check if an invalid address is being used for the IPv6 address automatically set as the manual address.
2. If the fault persists, perform the 016A Workflow Scanning Error Entry RAP.

018-435 Duplicate WiFi IPv6 Address 3 RAP

018-435 There is a device on the network with the same IP address as the machine's IPv6 ‘Manual Address’ in the network environment that WiFi is connected to.

Procedure

Perform the steps that follow:

1. Have the customer:
   a. Change the machine's IPv6 ‘Manual Address’ or the IPv6 address of the device on the network.
   b. Check if the IPv6 address automatically set as the manual address is being used somewhere else.
2. If the fault persists, perform the 016A Workflow Scanning Error Entry RAP.

018-436 Duplicate WiFi IPv6 Address 4 RAP

018-436 There is a device on the network with the same IP address as the machine's IPv6 ‘Link-local Address’ in the network environment that WiFi is connected to.

Procedure

Perform the steps that follow:

1. Have the customer:
   a. Change the IPv6 address of the device on the network with the duplicate address to resolve the problem.
   b. Check if the IPv6 address automatically set as the link-local address is being used somewhere else.
2. If the fault persists, perform the 016A Workflow Scanning Error Entry RAP.

018-500, 501, 503, 504, 506, 507, 508 CA Server Error RAP

018-500 The SSL server that is necessary for CA could not start because there was no server certificate or private key at an attempt to start the device.

018-501 The device could not connect to the CA server when trying to do CA authentication. The device has failed in communication.

018-503 The device received a message from the CA server and was waiting for a JRM/UI judgment, but received no response in time.

018-504 During communication between the device and the CA server for authentication, a mismatch in Session ID between both has occurred.

018-506 During communication between the device and the CA server, a mismatch in Field ID between both has occurred.

018-507 The CA authentication server requested an entry of user info, and the server determined that the entered info was different.

018-508 In process of CA authentication, the device has received a server exception message from the CA authentication server.

Procedure

Have the customer:

1. Make the IOT and the controller the same in agreement info.
2. Set up the server certificate, or set the CA function to off.
3. Check the address of the CA server, or recheck the connection to the network.
4. Retry the authentication operation.
5. Enter the correct user name and password.
6. Check the status of the CA server. Reboot it if necessary.

018-502 SMB Login Failure RAP

018-502 When logging in to the SMB server, it was detected that the workstations that can log in during SMB scan are limited.

Procedure

Have the customer check the properties information of the specified user and check whether the workstations that can log in to the server are limited.

018-505 SMB-DOS Protocol Error RAP

018-505 SMB user authentication failed/unable to log into SMB scanner.

Procedure

Have the customer contact the network administrator for the correct user name or password.

018-509 Template Parameter Conflict RAP

018-509 CUI scan: an invalid job template is specified.

Procedure

Have the customer check whether the settings in the job template are correct. For example:

1. A setting that cannot be used in the device is set.
2. The transfer repository is not set correctly.
3. A nonexistent template name is specified.

018-524 Invalid Device Network Setting RAP

018-524 CUI scan: an invalid job template is specified.

Procedure

Have the customer:

1. Check whether the port and network related settings that are required to execute the scan job are set properly in the device.
2. Check whether the DNS server setting is correct.
3. Check whether the port for the specified protocol is activate.

018-525 HDD full or Access Error RAP

018-525 CUI scan: HDD-related error during processing of job template.

Procedure

Perform the steps that follow:

1. Advise the customer to wait for a while, then perform the same operation again.
2. If the fault persists, perform the 016-210, 506, 777, 780, 798 HDD Error RAP.

018-526 to 018-529, 531, 532 CUI Scan Error RAP

018-526 A CUI scan start request was received when the job template is being polled.

018-527 CUI scan: internal error occurred when processing job template.

018-528 CUI scan: soap argument error.

018-529 CUI scan: duplication of soap job startup request.

018-531 Other errors during start-up of a CUI scan job.

018-532 Failed to create CUI scan job.

Procedure

Advise the customer to wait for a while, then perform the same operation again.

018-530 Authentication Error RAP

018-530 Authentication/DV-related error during start-up of a CUI scan job.

Procedure

Advise the customer to either perform the correct authentication operation or check the limitations (color mode, number of sheets, services) that was set by the administrator.

018-543 Shared Name Error in SMB Server RAP

018-543 Problem with the shared name of the SMB scan server.

Procedure

Have the customer:

1. Check the shared name specified then set the correct name.
2. Check that the user has the right to access the shared name specified.

018-547 SMB Scan Users Restriction RAP

018-547 The number of SMB scan users has exceeded the limit.

Procedure

Have the customer:

1. Check the limit for the number of users that can connect to the shared folder.
2. Check whether the number of users who are concurrently using the server has exceeded the maximum number.

018-556 HTTP Server Script Error RAP

018-556 HTTP error - invalid script.

Procedure

Have the customer:

1. Check that the drive and directory that are specified in the HTTP server that sends scanned documents are accessible.
2. Repeat the operation.

018-557 HTTP Invalid Character in Filename RAP

018-557 HTTP file - invalid characters.

Procedure

Have the customer ensure that the file name that is specified in the scanned document destination does not contain any invalid characters.

018-558 HTTP File Not Found RAP

018-558 The HTTP directory/file name does not exist.

Procedure

Have the customer:

1. Check that the directory that is specified in the scanned document destination HTTP server exists.
2. Check that the file name that is specified in the scanned document destination HTTP server exists.

018-559 HTTP File Duplication Fail RAP

018-559 File name conflict stop.

Procedure

Advise the customer that when performing scan Jobs, set File Name Conflict to other than Cancel Job.

018-560 to 018-563 HTTP Server Login Fail RAP

018-560 HTTP user authentication error.

018-561 HTTP error - not found.

018-562 HTTP response client error.

018-563 HTTP response server error.

Procedure

Have the customer:

1. Check whether the scanned document destination HTTP server is accessible from the PC.
2. Check the login user name.
3. Check the login password.
4. Check the name of scanned document destination HTTP server.
5. Check the server path name of scanned document destination HTTP server.

018-564 Host Name Solution Error in HTTP RAP

018-564 Failed to resolve host name in HTTP.

Procedure

Have the customer:

1. Check whether the scanned document destination HTTP server has been registered in the DNS.
2. Check whether it is connected to the DNS server.
3. Check whether the DNS server address is set.

018-565 Proxy Name Solution Error in HTTP RAP

018-565 Failed to resolve proxy name error in HTTP.

Procedure

Have the customer:

1. Check whether the proxy server name that is set in the device has been registered in the DNS.
2. Check whether it is connected to the DNS server.
3. Check whether the DNS server address is set.

018-566, 018-567 Server Connect Error in HTTP RAP

018-566 Failed to connect to the HTTP server.

018-567 HTTP error - access error.

Procedure

Have the customer:

1. Check the network cable of the device.
2. Check whether the scanned document destination HTTP server is accessible from the PC.

018-568 HTTP Server SSL Access Fail RAP

018-568 HTTP error - abnormal SSL connection.

Procedure

Have the customer:

1. Check whether the scanned document destination HTTP server is accessible from the PC.
2. Check whether the SSL setting of the scanned document destination HTTP server is valid.
3. Check the name of scanned document destination HTTP server.
4. Check the server path name of scanned document destination HTTP server.

018-569 HTTP Server Certificate Fail RAP

018-569 HTTP error - invalid certificate.

Procedure

Have the customer:

1. Check whether the scanned document destination HTTP server is accessible from the PC.
2. Check whether the SSL server certificate of the scanned document destination HTTP server is registered in the device.
3. Check whether the SSL server certificate of the scanned document destination HTTP server is valid. For example, check the items that follow:
   - The certificate has not expired yet.
   - The time that is set in the device is correct.
   - It is not in the discard list.
   - The certificate path of the SSL server certificate and import any necessary CA certificate.
4. If the certificate is not registered in the scanned document destination HTTP server, disable the device certificate validation.

018-570 HTTP Certificate Fail RAP

018-570 HTTP error - invalid client certificate.

Procedure

Have the customer:

1. Check whether the scanned document destination HTTP server is accessible from the PC.
2. Check whether the SSL client certificate is set correctly in the device.
3. Check whether a valid device certificate is registered in the scanned document destination HTTP server.

018-571 Internal Error in Scan RAP

018-571 Scan network sending software internal error.

Procedure

Have the customer repeat the operation.

018-587 File Duplication Fail RAP

018-587 File name conflict stop.

Procedure

Have the customer set File Name Conflict to other than Cancel Job.

018-588 Scan Filing Policy Invalid RAP

018-588 Invalid filing policy.

Procedure

Advise the customer that when Add is selected for File Name Conflict, check that the file format is not set to Multi-page.

018-589 NEXTNAME File Error RAP

018-589 NEXTNAMEDAT file access error.

Procedure

Advise the customer that when Add is selected for File Name Conflict, check that the NEXT-NAME.DAT file is correct.

018-590 Same Name Exists RAP

018-590 A file/folder with the same name was detected on the server.

Procedure

Have the customer perform the same operation again without multiple machines accessing the same folder in the same server.

018-591 File Name Suffix Over Limit RAP

018-591 The scan file name has exceeded the suffix limit value.

Procedure

Have the customer change the file name/destination folder on the scan server. Else, move or delete the files in the destination folder.

018-592, 018-593 Lock Folder Fail RAP

018-592 Scan lock folder creation failed.

018-593 Failed to delete the scan lock folder.

Procedure

Have the customer:

1. Check if a lock directory (*.LCK) remains in the transfer destination, delete it manually then retry the job.
2. Check whether there is a folder that has the same name as the specified name.

018-595 Detected User Duplication RAP

018-595 Duplicate IDs were detected at ICCG external authentication (LDAP protocol).

Procedure

Have the customer make corrections so that the user entries in the database of the LDAP server do not have the same IC card information.

018-596, 018-700 Network Error RAP

018-596 An undefined protocol error, and other errors with LDAP protocol.

018-700 Network stack is not initialized fail.

Procedure

Advise the customer to wait for a while, then perform the same operation again.

018-701 to 018-705 LDAP Protocol Errors 01 to 05 RAP

018-701 LDAP protocol error 01 at address book operation (operation error).

018-702 LDAP protocol error 02 at address book operation (operation error).

018-703 LDAP protocol error 03 at address book operation.

018-704 LDAP protocol error 04 at address book operation (too many search results to be processed).

018-705 LDAP protocol error 05 at Address Book operation (comparison request result is false)

Procedure

Verify that print jobs are printing or print a configuration report and verify that network setup settings are indicated. **The printer is operational or the configuration report indicates valid network settings.**

Y **N**

Check for damage with the network connection. If there is no damage then there is a problem with the network. Inform the customer that the network requires service.

There is a problem with the LDAP setups on the machine or with the remote LDAP server. Have the customer verify the machine LDAP setups. If the check is good, there may be a problem with the remote LDAP server.

018-706 LDAP Protocol Error 06 RAP

018-706 LDAP protocol error 06 at address book operation (comparison request result is true).

Procedure

Perform the steps that follow:

1. For a single occurrence, take no action.
2. If the fault persists, switch off, then switch on the machine, GP 10.

018-707, 018-708 LDAP Protocol Errors 07 and 08 RAP

018-707 LDAP protocol error 07 at address book operation (the specified authentication method is not supported).

018-708 LDAP protocol error 08 at address book operation (strong authentication is required)

Procedure

Verify that print jobs are printing or print a configuration report and verify that network setup settings are indicated. **The printer is operational or the configuration report indicates valid network settings.**

Y N

Check for damage with the network connection. If there is no damage then there is a problem with the network. Inform the customer that the network requires service.

There is a problem with the LDAP setups on the machine or with the remote LDAP server. Have the customer verify the machine LDAP setups. If the check is good, there may be a problem with the remote LDAP server.

018-709 Active Communication is Unavailable Now Fail RAP

018-709 Active communication is unavailable now fail.

Procedure

1. In case of IPv4 environment, have the customer:
   a. Check whether the address that is being used as the IPv4 address of the device is undefined, or whether it has become the Auto IP address.
   b. Check if the network has been connected properly.
   c. Check with the network administrator on whether the DHCP server address has been exhausted.
2. In case of IPv6 environment, have the customer:
   a. Check whether the address that is being used as the IPv6 address of the device has been allocated with a global address that uses the network address distributed by the IPv6 router.
   b. Check if the network has been connected properly.
   c. Check with the network administrator on whether the IPv6 router has been configured correctly.

018-710 to 018-714 LDAP Protocol Errors 10 to 14 RAP

018-710 LDAP protocol error 10 at address book operation (not registered in search range).

018-711 LDAP protocol error 11 at address book operation (admin limit is exceeded).

018-712 LDAP protocol error 12 at address book operation (extended function cannot be used).

018-713 LDAP protocol error 13 at address book operation (secrecy is required).

018-714 LDAP protocol error 14 at Address Book operation (SASL bind in progress).

Procedure

Verify that print jobs are printing or print a configuration report and verify that network setup settings are indicated. **The printer is operational or the configuration report indicates valid network settings.**

Y N

Check for damage with the network connection. If there is no damage then there is a problem with the network. Inform the customer that the network requires service.

There is a problem with the LDAP setups on the machine or with the remote LDAP server. Have the customer verify the machine LDAP setups. If the check is good, there may be a problem with the remote LDAP server.

018-715 Kerberos Attestation Protocol Error 73 RAP

018-715 Kerberos Attestation protocol error 73

Procedure

Advice the customer that:

1. If the error occurred in the case of smart card authentication, algorithm not supported by the device is specified by KDC.
2. In the case of password authentication, KDC does not support any of the device's algorithms.
3. KDC settings should be reviewed. Also, in the case of devices supporting FIPS, disabling FIPS mode may correct the problem.

018-716 to 018-721 LDAP Protocol Errors 16 to 21 RAP

018-716 LDAP protocol error 16 at address book operation (the requested attribute does not exist).

018-717 LDAP protocol error 17 at address book operation (the specified attribute is not defined)

018-718 LDAP protocol error 18 at address book operation (unsuitable combination).

018-719 LDAP protocol error 19 at address book operation (limit violation).

018-720 LDAP protocol error 20 at address book operation (the specified attribute already exists)

018-721 The server returned RFC2251 standard result message 21 (syntax error of the specified attribute value) in response to the address book inquiry.

Procedure

Verify that print jobs are printing or print a configuration report and verify that network setup settings are indicated. **The printer is operational or the configuration report indicates valid network settings.**

Y **N**

Check for damage with the network connection. If there is no damage then there is a problem with the network. Inform the customer that the network requires service.

There is a problem with the LDAP setups on the machine or with the remote LDAP server. Have the customer verify the machine LDAP setups. If the check is good, there may be a problem with the remote LDAP server.

018-722 GCP Network Fail RAP

018-722 GCP network connection error.

Procedure

Perform the steps that follow:

1. Have the customer confirm the network connection status, network settings status with the system administrator.
2. If the fault persists, reload the software, GP 4.

018-723, 018-740 GCP Certification Fail RAP

018-723 GCP certificate connection error.

018-740 Connection error of certificate has occurred during communication through XMPP protocol with Google server.

Procedure

Perform the steps that follow:

1. Have the customer confirm with the network administrator the correct root CA certificate is present, certificate authentication settings are correct .
2. If the fault persists, reload the software, GP 4.

018-724 GCP SSL Connection Fail RAP

018-724 GCP SSL connection error.

Procedure

Perform the steps that follow:

1. Have the customer confirm with the network administrator the network (SSL Communication) connection status, SSL settings status.
2. If the fault persists, reload the software, GP 4.

018-725 Kerberos Attestation Protocol Error 22 RAP

018-725 Duplicate IDs were detected at ICCG external authentication (LDAP protocol).

Procedure

Advise the customer that the user Kerbeors password set on the Kerbeors server has expired, it is necessary to ask the server administrator to extend the expiration date of it.

018-726 Kerberos Attestation Protocol Error 70 RAP

018-726 Duplicate IDs were detected at ICCG external authentication (LDAP protocol).

Procedure

Have the customer check if a higher CA certificate in the user SmartCard is registered with the device. If not, register it with the device.

018-727 Kerberos Attestation Protocol Error 71 RAP

018-727 The certificate in the user SmartCard is incorrect (rejected by the Kerbeors server).

Procedure

Have the customer check if the certificate in the user SmartCard is valid. If it has become invalid or expired, renew it, or if the Kerberos server prohibits the use of the certificate, it is necessary to ask the server administrator to authorise the server permit it.

018-728 Kerberos Attestation Protocol Error 72 RAP

018-728 The Kerbeors server KDC certificate is incorrect (the root CA certificate is not registered with the device; the KDC certificate has expired; or the KDC certificate address is different from that written on the certificate.)

Procedure

Have the customer:

1. Check if the root CA certificate of KDC certificate is registered with the device. If not, register the root CA certificate.
2. If the KDC certificate has expired, renew the Kerbeors server KDC certificate
3. Check that the Kerberos server address set on the device is the same as that written on the Kerbeors server KDC certificate. If they are different, change the Kerbeors server address set on the device, or check the Kerbeors server KDC certificate. In this case, there is a possibility of a wrong setting or Kerbeors server impersonation.

018-729, 730, 738, 739, 743, 744, 745, 746 GCP Network Fail RAP

018-729 GCP connection timeout error.

018-730 GCP other network error.

018-738 Network-related error has occurred during communication through XMPP protocol with Google server.

018-739 Network-related internal error has occurred during communication through XMPP protocol with Google server.

018-743 A network related (proxy connection) error has occurred when communicating with Google server via HTTP.

018-744 A network related (DNS name resolution) error has occurred when communicating with Google server via HTTP.

018-745 A network related (proxy connection) error has occurred when communicating with Google server via XMPP protocol.

018-746 A network related (DNS name resolution) error has occurred when communicating with Google server via XMPP protocol.

Procedure

Perform the steps that follow:

1. Have the customer check the network connection status, settings status as the network might be congested.
2. If the fault persists, reload the software, GP 4.

018-731 GCP HDD Limit Fail RAP

018-731 Job is aborted because there is not enough capacity in the HDD.

Procedure

Perform the steps that follow:

1. Have the customer check the HDD available capacity, and free up space. Print again after executing all print jobs which are being spooled.
2. If the fault persists, reload the software, GP 4.

018-732 to 018-736 LDAP Protocol Errors 32 to 36 RAP

018-732 LDAP protocol error 32 at address book operation (applicable object does not exist).

018-733 LDAP protocol error 33 at address book operation (wrong alias).

018-734 LDAP protocol error 34 at address book operation (wrong DN format, wrong password).

018-735 LDAP protocol error 35 at address book operation (object is terminated).

018-736 LDAP protocol error 36 at address book operation (cannot refer to alias).

Procedure

Verify that print jobs are printing or print a configuration report and verify that network setup settings are indicated. **The printer is operational or the configuration report indicates valid network settings.**

Y **N**

Check for damage with the network connection. If there is no damage then there is a problem with the network. Inform the customer that the network requires service.

There is a problem with the LDAP setups on the machine or with the remote LDAP server. Have the customer verify the machine LDAP setups. If the check is good, there may be a problem with the remote LDAP server.

018-737, 018-741 GCP Other Fail RAP

018-737 Other internal error has occurred during GCP module processing.

018-741 Other internal error has occurred during GCP module (XMPP library) processing.

Procedure

Perform the steps that follow:

1. Have the customer check the settings.
2. If the fault persists, reload the software, GP 4.

018-747 Server Not Found in SMB RAP

018-747 Unable to find the SMB server during SMB scan.

Procedure

Have the customer:

1. **Check the Communication Environment:**

   Check that network communication between the transfer destination SMB server and this machine is available, by the performing the steps that follow:

   a. Network cable connection.

   b. If the transfer destination address is specified using IP Address, check whether the IP address is correct.

   c. Check with the System Administrator on whether the SMB related ports (*1) are blocked (whether there are blocked ports at the transfer destination server, between the MFD and the server, etc.)

2. **Check the SMB Server:**

   Check the network settings that follow to check if the computer operates as an SMB server:

   a. Whether the SMB related ports (*1) are blocked by software, such as anti-virus or a firewall, on the server.

3. **Check the Resolution Server Name:**

   Check the network settings that follows to check if the computer operates as an SMB server:

   a. For communication that goes beyond the subnet and the server name is 15 characters or shorter, check the WINS server settings and check whether the server name address can be resolved correctly.

4. If there is no problem, login to the SMB server from another PC using the same user name and check whether a file can be written to the same storage destination on that SMB server. If write is possible, try to perform the same operation again from the machine.

018-748, 018-750 to 018-754 LDAP Protocol Errors 48, 50 to 36 RAP

018-748 LDAP protocol error 48 at address book operation (authentication denied).

018-750 LDAP protocol error 49 at address book operation (the specified authentication certificate is invalid, login name is invalid).

018-751 LDAP protocol error 51 at address book operation (busy).

018-752 LDAP protocol error 52 at address book operation (cannot be processed).

018-753 LDAP protocol error 53 at address book operation (execution denied).

018-754 LDAP protocol error 54 at address book operation (loop detected).

Procedure

Verify that print jobs are printing or print a configuration report and verify that network setup settings are indicated. **The printer is operational or the configuration report indicates valid network settings.**

Y **N**

Check for damage with the network connection. If there is no damage then there is a problem with the network. Inform the customer that the network requires service.

There is a problem with the LDAP setups on the machine or with the remote LDAP server. Have the customer verify the machine LDAP setups. If the check is good, there may be a problem with the remote LDAP server.

018-749 LDAP Protocol Error 49 RAP

018-749 There is a LDAP (Lightweight Directory Access Protocol) error (Designated authentication certificate is invalid/Login name is invalid).

Procedure

Verify that print jobs are printing or print a configuration report and verify that network setup settings are indicated. **The printer is operational or the configuration report indicates valid network settings.**

Y N

Check for damage with the network connection. If there is no damage then there is a problem with the network. Tell the customer that the network requires service.

There is a problem with the LDAP setups on the machine or with the remote LDAP server.
Ask the customer to re-verify user name and password to be used for authentication to cancel incorrect search login name. Check with the network administrator to verify authentication setting of server side when the status is not improved.
Verify the machine LDAP setups. If the check is OK, there may be a problem with the remote LDAP server.

018-755 Server Connection Error in SMB RAP

018-755 There is no response from the server and failed to establish TCP/IP session.

Procedure

Have the customer:

1. Check the transfer destination server, the router that exists between the multifunction device and the server, and the anti-virus software, firewall software, etc.
2. If there is no problem, login to the SMB server from another PC using the same user name and check whether a file can be written to the same storage destination on that SMB server. If write is possible, try to perform the same operation again from the machine.

   NOTE: *If the situation does not improve, it is highly likely that there is a problem occurring at the server.*

018-756 Server Login Response Timeout in SMB RAP

018-756 Unable to receive a response from the server within the specified time during the scanner (scan to PC) SMB authentication.

Procedure

Have the customer:

1. If the transfer destination server belongs to the Active Directory domain, check for delays in the communication between transfer destination server and Domain Controller by the method that follows:
   a. Check whether it is taking a long time to access the transfer destination server from a PC client.
   b. If it is taking a long time, consult with the System Administrator.
2. If there is no problem, login to the SMB server from another PC using the same user name and check whether a file can be written to the same storage destination on that SMB server. If write is possible, try to perform the same operation again from the machine.

   NOTE: *If the situation does not improve, there is a possibility of bad connection status in the customers environment. Advise them to consult with the System Administrator.*

018-757 Host Name Solution Error in SMB RAP

018-757 The system has failed to resolve the SMB server name of the SMB that is specified as the transfer destination during the scanner (scan to PC).

Procedure

Have the customer:

1. For communication that goes beyond the subnet, check the DNS server settings and check whether the server name address can be resolved correctly.
2. If there is no problem, login to the SMB server from another PC using the same user name and check whether a file can be written to the same storage destination on that SMB server. If write is possible, try to perform the same operation again from the machine.

018-758, 018-759 Picture Preservation or File Name Error RAP

018-758 SMB Scan image storage location or file name error.

018-759 SMB Scan image storage location or file name error.

Procedure

Have the customer:

1. Check whether the storage location is correct.
2. Check whether the specified file name is one that can be created on the SMB server.
3. Check whether the storage destination or file name of the scan image that is set at the main unit contains restricted characters.

018-760 DFS Link Error in SMB RAP

018-760 The specified storage location gets linked to other shared folder during scanner (scan to PC) SMB transfer as it is set to Distributed File System (DFS).

Procedure

Have the customer check the settings of the distributed file system (DFS) with the system administrator.

018-761 Out of Server Memory in SMB RAP

018-761 The memory at the storage destination PC was detected to have ran out during scanner (scan to PC) SMB transfer.

Procedure

Have the customer:

1. Check whether the usage condition at the storage destination PC has caused all the memory to be used.
2. Terminate the applications that are currently not in use.
3. Check the memory usage status and perform upgrades to increase the memory.
4. Reboot the server.

018-762 Server Response Timeout in SMB RAP

018-762 The response from the storage destination PC has taken a long time and caused a timeout during scanner (scan to PC) SMB transfer.

Procedure

Have the customer:

1. Check whether an anti-virus software is operating at the storage destination PC. If operating, reduce the number of document copies to make the transmission file smaller.
2. Check that there is no cable unplugged or any issues with the router or the hub in the network route.

018-763 Character Convert Error in SMB RAP

018-763 The character code conversion process in the multifunction device has failed during the scanner (scan to PC) SMB transfer.

Procedure

Have the customer:

1. Check whether the server name, shared name, path name, etc. contains machine-dependent characters such as (special symbol), (number symbol), IV (roman numeral), and etc.
2. If it contains any machine-dependent characters, edit it so that the name no longer contain any and operate.

018-764 to 769, 771 LDAP Protocol Errors 64 to 69 and 71 RAP

018-764 LDAP protocol error 64 at address book operation (naming violation).

018-765 LDAP protocol error 65 at address book operation (object class specification error).

018-766 LDAP protocol error 66 at address book operation (entries other than termination cannot be executed).

018-767 LDAP protocol error 67 at Address Book operation (cannot be executed at RDN).

018-768 LDAP protocol error 68 at address book operation (the specified entry already exists).

018-769 LDAP protocol error 69 at address book operation (object class cannot be changed).

018-771 LDAP protocol error 71 at address book operation (influence on multiple DSA).

Procedure

Verify that print jobs are printing or print a configuration report and verify that network setup settings are indicated. **The printer is operational or the configuration report indicates valid network settings.**

Y **N**

Check for damage with the network connection. If there is no damage then there is a problem with the network. Inform the customer that the network requires service.

There is a problem with the LDAP setups on the machine or with the remote LDAP server. Have the customer verify the machine LDAP setups. If the check is good, there may be a problem with the remote LDAP server.

018-770 LDAP Protocol Error 70 RAP

018-770 LDAP protocol error 70 at Address Book operation (search target is too large).

Procedure

Verify that print jobs are printing or print a configuration report and verify that network setup settings are indicated. **The printer is operational or the configuration report indicates valid network settings.**

Y **N**

Check for damage with the network connection. If there is no damage then there is a problem with the network. Tell the customer that the network requires service.

Ask the customer to retry search with narrower search target by changing search condition/search start position in Address Book internal data. If the check is OK, there may be a problem with the remote LDAP server.

018-772 Shared Name Not Found in Server RAP

018-772 The shared name that was set does not exist on the transfer destination server during scanner (scan to PC) SMB transfer.

Procedure

Have the customer check whether the shared name that is set at the main unit exists on the transfer destination PC.

018-773 Shared Name Error in Server RAP

018-773 Invalid shared name at the SMB scan server.

Procedure

Have the customer:

1. Check whether the shared name that is set at the main unit contains restricted characters.
2. Check whether the beginning or the end of the shared name that is set at the main unit contain any blank space.
3. Check whether the shared name that is set at the main unit is only specified by a period.
4. If the transfer destination is a Macintosh, the permission setting must be changed for the user of the shared folder. For the settings, check with the System Administrator.

018-780 to 018-784 LDAP Protocol Errors 80 and 82 to 84 RAP

018-780 LDAP protocol error 80 at address book operation (an unknown error has occurred).

018-782 LDAP protocol error 82 at address book operation (program error or SASL authentication error).

018-783 LDAP protocol error 83 at address book operation (outgoing message encoding error).

018-784 LDAP protocol error 84 at address book operation (incoming message decoding error).

Procedure

Verify that print jobs are printing or print a configuration report and verify that network setup settings are indicated. **The printer is operational or the configuration report indicates valid network settings.**

Y **N**

Check for damage with the network connection. If there is no damage then there is a problem with the network. Inform the customer that the network requires service.

There is a problem with the LDAP setups on the machine or with the remote LDAP server. Have the customer verify the machine LDAP setups. If the check is good, there may be a problem with the remote LDAP server.

018-781 LDAP Protocol Error 81 RAP

018-781 LDAP protocol error 81 at address book operation (cannot connect to server).

Procedure

Have the customer:

1. Check if the network cable is connected.
2. If it is connected, check the start up state of the target request server.
3. Check whether the shared name that is set at the main unit is only specified by a period.
4. Check that the server name is correct.

018-785 LDAP Protocol Error 85 RAP

018-785 LDAP protocol error 85 at address book operation (search timeout).

Procedure

Verify that print jobs are printing or print a configuration report and verify that network setup settings are indicated. **The printer is operational or the configuration report indicates valid network settings.**

Y **N**

Check for damage with the network connection. If there is no damage then there is a problem with the network. Tell the customer that the network requires service.

Ask the customer to retry search with narrower search target by changing search condition/search start position in Address Book internal data. Ask the customer to verify the machine LDAP setups. If the check is OK, there may be a problem with the remote LDAP server.

018-786 to 797 LDAP Protocol Errors 86 to 97 RAP

018-786 LDAP protocol error 86 at address book operation (an unknown authentication method has been specified).

018-787 LDAP protocol error 87 at address book operation (mistake in definition of search filter).

018-788 LDAP protocol error 88 at address book operation (instruction canceled).

018-789 LDAP protocol error 89 at address book operation (an incorrect parameter was passed).

018-790 LDAP protocol error 90 at address book operation (insufficient memory).

018-791 LDAP protocol error 91 at address book operation (server connection prohibited).

018-792 LDAP protocol error 92 at address book operation (unsupported function).

018-793 LDAP protocol error 93 at address book operation (result is not returned).

018-794 LDAP protocol error 94 at address book operation (result no longer exist).

018-795 LDAP protocol error 95 at address book operation (result still exist).

018-796 LDAP protocol error 96 at address book operation (client loop detected).

018-797 LDAP protocol error 97 at address book operation (maximum hop number for reference is exceeded).

Procedure

Verify that print jobs are printing or print a configuration report and verify that network setup settings are indicated. **The printer is operational or the configuration report indicates valid network settings.**

Y **N**

Check for damage with the network connection. If there is no damage then there is a problem with the network. Inform the customer that the network requires service.

There is a problem with the LDAP setups on the machine or with the remote LDAP server. Have the customer verify the machine LDAP setups. If the check is good, there may be a problem with the remote LDAP server.

021-210, 211, 212 USB IC Card Reader Error RAP

021-210 USB IC card reader connection status error.

021-211 The USB IC card reader is broken.

021-212 USB IC card reader activation failure.

Procedure

WARNING

Ensure that the electricity to the machine is switched off while performing tasks that do not need electricity. Refer to GP 10. Disconnect the power cord. Electricity can cause death or injury. Moving parts can cause injury.

Perform the steps that follow:

1. Switch off, then switch on the machine, GP 10.
2. Check the wiring between the card reader and the machine.
3. Enter dC131. Ensure NVM value 700-885 is set correctly:
   - Internal IC card reader: 0
   - IC card reader (HID support): 1
4. If the fault persists, advise the customer that the card reader is faulty.

021-213 Controller Price Table Error RAP

021-213 An error in setting up EPA controller unit price table.

Procedure

WARNING

Ensure that the electricity to the machine is switched off while performing tasks that do not need electricity. Refer to GP 10. Disconnect the power cord. Electricity can cause death or injury. Moving parts can cause injury.

Perform the steps that follow:

1. Perform OF 3 Special Boot Modes RAP.
2. Advise the customer to save the unit price table to a file. Then set a value between 1 and 9999999 at the location(s) where a value out of the range is set. Then save the file containing the corrected unit price table.
3. To not use the new type of subtraction system (M/C Unit-Price Table system), enter dC131. Set the value of NVM 850-027 to 0.
4. To use the new type of subtraction system, enter dC131. Set every available unit price (NVM values 855-xxx) to a value between 1 and 9999999. Switch the machine off, then on, GP 10.

   NOTE: Obtain consent from the customer as to the values to set the prices to.

021-214 USB IC Card Reader Encryption Setting RAP

021-214 Failure in the USB IC card reader encryption settings.

Procedure

Perform the steps that follow:

1. Switch off, then switch on the machine, GP 10.
2. Advise the customer that the encryption settings of the connected USB IC card reader are wrong. Connect an USB IC card reader that has never been used before, or one that has had its encryption settings initialized as factory default settings to the machine. Switch off, then switch on the machine, GP 10.

021-215 Invalid Accessory Type Setting RAP

021-215 Invalid accessory type setting.

Procedure

Perform the steps that follow:

1. Enter dC131. Set NVM value 850-007 to the appropriate one for the connected accessory. Switch off, then switch on the machine, GP 10.
2. Or replace the connected accessory with the appropriate one for the setting. Switch off, then switch on the machine, GP 10.

021-360 EP Accessory Fail RAP

021-360 An error occurred in the connection to the EP accessory. The accessory that should be installed is not found.

Procedure

Perform the steps that follow:

1. Perform OF 3 Special Boot Modes RAP.
2. Perform the 016-357 Controller EP Communication Fail RAP.

021-361 EP Accessory Type Configuration Error RAP

021-361 EP accessory type setting error.

Procedure

WARNING

Ensure that the electricity to the machine is switched off while performing tasks that do not need electricity. Refer to GP 10. Disconnect the power cord. Electricity can cause death or injury. Moving parts can cause injury.

Perform the steps that follow:

1. Perform OF 3 Special Boot Modes RAP.
2. Enter dC131. Ensure NVM value 850-007 is set correctly.
3. If the fault persists, perform the 016-357 Controller EP Communication Fail RAP.

021-401 USB IC Card Reader Connection Error RAP

021-401 USB IC card reader connection status is incorrect.

Procedure

WARNING

Ensure that the electricity to the machine is switched off while performing tasks that do not need electricity. Refer to GP 10. Disconnect the power cord. Electricity can cause death or injury. Moving parts can cause injury.

Perform the steps that follow:

1. Switch the machine off, then on, GP 10.
2. Advise the customer to disconnect the USB IC card reader that caused this error to occur from the USB connector.

021-500 EP Accessory Job Exclusion RAP

021-500 When the fax send billing function is enabled, the errors that follow occurred:

- There was an attempt to start up a job for accessory billing in the middle of a fax send job operation.
- There was an attempt to start up a Fax send Job in the middle of a Job for accessory billing operation. This fault is not detected when the fax send billing function is disabled.

Procedure

Have the customer wait for the current running job to complete, and then restart the job.

021-501 Invalid URL Detected RAP

021-501 The server URL is grammatically incorrect.

Procedure

Perform the steps that follow:

1. Switch off, then switch on the machine, GP 10.
2. Have the customer check the URL of the EP server.

021-502, 503, 504 Couldn’t Resolve Proxy Name RAP

021-502 Proxy server address resolution error.

021-503 Server address resolution error.

021-504 Server connection error.

Procedure

Have the customer:

1. Check the connection of the LAN cable.
2. Check the DNS server address settings.
3. Check the default gateway settings.
4. Check the subnet mask settings.

021-505, 021-506 SSL Error RAP

021-505 An error has occurred during SSL/TLS handshake.

021-506 The SSL certificate of the server is invalid.

Procedure

Switch off, then switch on the machine, GP 10.

021-507 Unauthorized Proxy Access RAP

021-507 Authentication of the proxy server has failed.

Procedure

Have the customer:

1. Check the EP proxy server authentication user.
2. Check the EP proxy server authentication password.
3. If the problem persists after checking the settings, there may be a network failure or the proxy server settings may have changed/failed.

021-508, 520, 521 Host/Proxy Connection Timed Out RAP

021-508 Communication timeout has occurred.

021-520 CA communication error.

021-521 CA communication timeout.

Procedure

Have the customer:

1. Check the connection of the LAN cable.
2. Check the default gateway settings.
3. Check the subnet mask settings.

021-509, 515, 516, 522 Invalid Message Detected RAP

021-509 The server detected an invalid message.

021-515 Invalid product code.

021-516 Invalid serial number.

021-522 Certificate library error.

Procedure

Switch off, then switch on the machine, GP 10.

021-510, 021-511 SOAP Fault RAP

021-510 Recall status mismatch (EP system).

021-511 Installation status mismatch (EP system)

Procedure

For information only. No service action required.

021-512, 513, 514, 517, 518, 519 Installation Conflict RAP

021-512 EP-SV installation conflict (EP system).

021-513 EP-DX installation conflict (EP system).

021-514 TRESS installation conflict (EP system).

021-517 Communication failure (EP center)

021-518 An internal error has occurred in the server.

021-519 High load status detected (EP center).

Procedure

Have the customer check with the EP Center for the EP contract status, registration status and system operation status.

021-523 Internal Error RAP

021-523 Software failure where processing can still continue was detected.

Procedure

Perform the steps that follow:

1. If the SOAP port has stopped, have the customer restart it.
2. If the fault persists, switch off, then switch on the machine, GP 10.

021-524 to 012-527 Communications Error RAP

021-524 Installation status mismatch.

021-525 Recall status mismatch.

021-526 Communication library error.

021-527 Invalid communication message (edge server).

Procedure

Switch off, then switch on the machine, GP 10.

021-528, 021-529 Communication Settings RAP

021-528 Communication setting error.

021-529 The latest version is detected (software update).

Procedure

Perform the steps that follow:

1. Switch off, then switch on the machine, GP 10.
2. If the fault persists, have the customer check with the EP Center for the EP contract status, registration status and system operation status.

021-530, 012-531 Update Server Error RAP

021-530 An error internal to the server (software update).

021-531 A large load on the server is detected (software update).

Procedure

Have the customer:

1. Wait a while, then operate again.
2. If the fault persists, have the customer check with the EP Center for the EP contract status, registration status and system operation status.

021-532 to 021-535 Unsupported ROM Set RAP

021-532 An unsupported set of ROM versions is detected.

021-533 The user cannot do an update.

021-534 An unsupported submodule is detected.

021-535 An unsupported accessory is detected.

Procedure

Reload the software, GP 4.

021-700 Accessory Failure RAP

021-700 EP accessory - service canceled by USB accessory failure or disconnect.

Procedure

Perform the steps that follow:

1. Check the fault history, dC122 for fault 021-210, 021-211 or 021-212. If any of the faults is listed, perform the relevant RAP.
2. If none of the faults are listed, reload the software, GP 4.

021-701 Accessory Preparing RAP

021-701 EP accessory - service canceled by USB accessory preparing.

Procedure

Perform the steps that follow:

1. Have the customer wait for a minimum of 3 minutes for the USB accessory to start, then re-run the job
2. If the fault persists, reload the software, GP 4.

021-732, 941, 943, 945 EP Accessory Error RAP

021-732 EP accessory - service canceled by disable.

021-941 EP accessory - scan service paused by disable.

021-943 EP accessory - print service paused by disable.

021-945 EP accessory - service paused by disable.

Procedure

Perform the steps that follow:

1. Have the customer insert a Xerox card, copy card or cash into the accessory, and ensure that there are sufficient fees or card value.
2. If the fault persists, reload the software, GP 4.

021-733, 742, 944, 946 EP Accessory Color Error RAP

021-733 EP accessory service canceled by color mode restriction.

021-742 EP accessory - scan service paused by color mode restriction.

021-944 EP accessory - print service paused by color mode restriction.

021-946 EP accessory - service paused by color mode restriction.

Procedure

Perform the steps that follow:

1. Have the customer operate the color restriction key SW to allow color. Or, replace the card with another card that does not reach its upper limit in color mode.
2. If the fault persists, reload the software, GP 4.

021-947, 948, 949 Subtractive Accessory Disable (Scan) RAP

021-947 The remaining rate subtractive accessory is insufficient (scan service paused by subtractive accessory disable).

021-948 The remaining rate subtractive accessory has is insufficient (print service paused by subtractive accessory disable).

021-949 The remaining rate subtractive accessory has is insufficient (service paused by subtractive accessory disable).

Procedure

Advise the customer that in the case of dispenser, to insert a card that has a remaining rate enough to continue the job. In the case of coin kit, to add a necessary amount of money to continue the job.

023-500 UI ROM Download Fail RAP

023-500 Panel ROM data write processing error detection.

Procedure

WARNING

Ensure that the electricity to the machine is switched off while performing tasks that do not need electricity. Refer to GP 10. Disconnect the power cord. Electricity can cause death or injury. Moving parts can cause injury.

Perform the steps that follow:

1. Reload the software, GP 4.
2. If the fault persists, install a new UI console assembly, PL 1.1A Item 4 (B400) or PL 1.1B Item 4 (B405).

023-600, 023-601 UI Key Error RAP

023-600 A hard key on the panel has been found to be held down for one or more consecutive minutes.

023-601 The touch panel has been found to be held down for one or more consecutive minutes.

Procedure

For information only, no service action necessary.

024-340 to 024-360 IOT-ESS Communication Fail 1 RAP

024-340 MCU sending error detected by controller (invalid parameter was used).

024-341 MCU sending error detected by controller (sequence number error).

024-342 MCU sending error detected by controller (packet number error).

024-343 MCU sending error detected by controller (message length error).

024-345 MCU sending error detected by controller (check code error).

024-346 MCU sending error detected by controller (parity error detected by the IOT.

024-347 MCU sending error detected by controller (framing error detected by the IOT).

024-348 MCU sending error detected by controller (overrun error detected by the IOT).

024-349 MCU sending error detected by controller (receive abort detected by the IOT after the header had been recognized).

024-350 MCU receiving error detected by controller (sequence number of the received message packet is incorrect).

024-351 MCU receiving error detected by controller (packet number error).

024-352 MCU receiving error detected by controller (message length error).

024-353 MCU receiving error detected by controller (check code error).

024-354 MCU receiving error detected by controller (parity error detected by the UART).

024-355 MCU receiving error detected by controller (framing error detected by the UART).

024-356 MCU receiving overrun error detected by controller (overrun error detected by the UART).

024-357 MCU receiving error detected by controller (receiving abort detected after the header had been recognized).

024-358 Print sequence error detected by controller (paper feed and paper output that are not applicable to the number detected.)

024-359 MCU transmission receiving error detected by controller (invalid parameter used).

024-360 Initialization error between IOT and ESS.

Procedure

WARNING

Ensure that the electricity to the machine is switched off while performing tasks that do not need electricity. Refer to GP 10. Disconnect the power cord. Electricity can cause death or injury. Moving parts can cause injury.

Perform the steps that follow:

1. Switch off, then switch on the machine, GP 10.
2. Perform OF 3 Special Boot Modes RAP.
3. Ensure that all connectors on the ESS PWB, PL 18.1A Item 5 (B400) or PL 18.1B Item 5 (B405) and the MCU PWB, PL 18.2 Item 2 are securely connected. Ensure all surface mounted modules on the ESS PWB and MCU PWB are securely connected.
4. Reload the software, GP 4.
5. If the fault persists, install new components as necessary:
   - ESS PWB, PL 18.1A Item 5 (B400)
   - ESS PWB, PL 18.1B Item 5 (B405)
   - MCU PWB, PL 18.2 Item 2.

024-361 Invalid IOT Paper Size RAP

024-361 Invalid IOT paper size group information.

Procedure

WARNING

Ensure that the electricity to the machine is switched off while performing tasks that do not need electricity. Refer to GP 10. Disconnect the power cord. Electricity can cause death or injury. Moving parts can cause injury.

Perform the steps that follow:

1. Switch off, then switch on the machine, GP 10.
2. Ensure that all connectors on the ESS PWB, PL 18.1A Item 5 (B400) or PL 18.1B Item 5 (B405) and the MCU PWB, PL 18.2 Item 2 are securely connected. Ensure all surface mounted modules on the ESS PWB and MCU PWB are securely connected.
3. Initialize the user NVM, refer to dC301 NVM Initialization.
4. Reload the software, GP 4.
5. If the fault persists, install new components as necessary:
   - ESS PWB, PL 18.1A Item 5 (B400)
   - ESS PWB, PL 18.1B Item 5 (B405)
   - MCU PWB, PL 18.2 Item 2.

024-362, 024-363 Page Sync Illegal Start or Stop RAP

024-362 Page-sync occurred before video output preparation completes.

024-363 Page-sync completion error during video output.

Procedure

WARNING

Ensure that the electricity to the machine is switched off while performing tasks that do not need electricity. Refer to GP 10. Disconnect the power cord. Electricity can cause death or injury. Moving parts can cause injury.

Perform the steps that follow:

1. Switch off, then switch on the machine, GP 10.
2. Perform OF 3 Special Boot Modes RAP.
3. Ensure that all connectors on the ESS PWB, PL 18.1A Item 5 (B400) or PL 18.1B Item 5 (B405) and the MCU PWB, PL 18.2 Item 2 are securely connected. Ensure all surface mounted modules on the ESS PWB and MCU PWB are securely connected.
4. Reload the software, GP 4.
5. If the fault persists, install new components as necessary:
   - ESS PWB, PL 18.1A Item 5 (B400).
   - ESS PWB, PL 18.1B Item 5 (B405).
   - MCU PWB, PL 18.2 Item 2.

024-364 DMA Transfer Fail RAP

024-364 DMA transfer error. Reduction/enlargement was not completed even though the specified data was entered.

Procedure

WARNING

Ensure that the electricity to the machine is switched off while performing tasks that do not need electricity. Refer to GP 10. Disconnect the power cord. Electricity can cause death or injury. Moving parts can cause injury.

Perform the steps that follow:

1. Switch off, then switch on the machine, GP 10.
2. If installed, ensure the connectors on the hard disk are securely connected.
3. Remove, then re-install the EMMC card, PL 18.1A Item 6 (B400) or PL 18.1B Item 6 (B405). If necessary, install a new EMMC card.
4. If installed, format the hard disk drive, refer to dC355 Hard Disk Diagnostics.
5. Reload the software, GP 4.
6. If the fault persists, install a new ESS PWB, PL 18.1A Item 5 (B400) or PL 18.1B Item 5 (B405).

024-365 Overflow on Loop Back Write RAP

024-365 Loopback write overflow.

Procedure

This fault is currently not displayed. No service action necessary.

024-366 JBIG Library Other Fail RAP

024-366 Other errors in JBIG Lib.

Procedure

WARNING

Ensure that the electricity to the machine is switched off while performing tasks that do not need electricity. Refer to GP 10. Disconnect the power cord. Electricity can cause death or injury. Moving parts can cause injury.

Perform the steps that follow:

1. Switch off, then switch on the machine, GP 10.
2. If the fault persists, install a new ESS PWB, PL 18.1A Item 5 (B400) or PL 18.1B Item 5 (B405).

024-367 Decompress Other Fail RAP

024-367 Incorrect line synchronization was detected.

Procedure

WARNING

Ensure that the electricity to the machine is switched off while performing tasks that do not need electricity. Refer to GP 10. Disconnect the power cord. Electricity can cause death or injury. Moving parts can cause injury.

Perform the steps that follow:

1. Switch off, then switch on the machine, GP 10.
2. Perform OF 3 Special Boot Modes RAP.
3. Ensure the connectors on the hard disk are securely connected.
4. If installed, format the hard disk drive, refer to dC355 Hard Disk Diagnostics.
5. Reload the software, GP 4.
6. If the fault persists, install a new ESS PWB, PL 18.1A Item 5 (B400) or PL 18.1B Item 5 (B405).

024-368 PCI Error RAP

024-368 PCI access error occurred due to a faulty PCI bus.

Procedure

WARNING

Ensure that the electricity to the machine is switched off while performing tasks that do not need electricity. Refer to GP 10. Disconnect the power cord. Electricity can cause death or injury. Moving parts can cause injury.

Perform the steps that follow:

1. Switch off, then switch on the machine, GP 10.
2. Perform OF 3 Special Boot Modes RAP.
3. Ensure the connectors on the hard disk are securely connected.
4. If installed, format the hard disk drive, refer to dC355 Hard Disk Diagnostics.
5. Reload the software, GP 4.
6. If the fault persists, install a new ESS PWB, PL 18.1A Item 5 (B400) or PL 18.1B Item 5 (B405).

024-370 Marker Code Detection Fail RAP

024-370 Marker code detection error. During enlarge, when the file was enlarged only by the specified size, the end code (FF02) cannot be found in the compressed data.

Procedure

WARNING

Ensure that the electricity to the machine is switched off while performing tasks that do not need electricity. Refer to GP 10. Disconnect the power cord. Electricity can cause death or injury. Moving parts can cause injury.

Perform the steps that follow:

1. Switch off, then switch on the machine, GP 10.
2. Perform OF 3 Special Boot Modes RAP.
3. Change the Print mode (Normal/High Quality/High Resolution). Inform the customer of any print mode setting changes.
4. Remove, then re-install the EMMC card, PL 18.1A Item 6 (B400) or PL 18.1B Item 6 (B405). If necessary, install a new EMMC card.
5. Ensure that all connectors on the ESS PWB, PL 18.1A Item 5 (B400) or PL 18.1B Item 5 (B405) and the MCU PWB, PL 18.2 Item 2 are securely connected. Ensure all surface mounted modules on the ESS PWB and MCU PWB are securely connected.
6. Reload the software, GP 4.
7. If the fault persists, install new components as necessary:
   - ESS PWB, PL 18.1A Item 5 (B400).
   - ESS PWB, PL 18.1B Item 5 (B405).
   - MCU PWB, PL 18.2 Item 2.

024-371 to 024-373, 024-375 IOT-ESS Communication Fail 2 RAP

024-371 Communication between the ESS and IOT has not been established.

024-372 Sending error detected by the controller (incorrect parameter instruction).

024-373 DLL communication failure recovery error detected by the controller.

024-375 DLL receiving error detected by the controller (incorrect parameter instruction).

Procedure

WARNING

Ensure that the electricity to the machine is switched off while performing tasks that do not need electricity. Refer to GP 10. Disconnect the power cord. Electricity can cause death or injury. Moving parts can cause injury.

Perform the steps that follow:

1. Switch off, then switch on the machine, GP 10.
2. Perform OF 3 Special Boot Modes RAP.
3. Ensure that all connectors on the ESS PWB, PL 18.1A Item 5 (B400) or PL 18.1B Item 5 (B405) and the MCU PWB, PL 18.2 Item 2 are securely connected. Ensure all surface mounted modules on the ESS PWB and MCU PWB are securely connected.
4. Reload the software, GP 4.
5. If the fault persists, install new components as necessary:
   - ESS PWB, PL 18.1A Item 5 (B400).
   - ESS PWB, PL 18.1B Item 5 (B405).
   - MCU PWB, PL 18.2 Item 2.

024-376 IOT-ESS Communication Fail 3 RAP

024-376 MCU image signal truncation detected by the controller.

Procedure

WARNING

Ensure that the electricity to the machine is switched off while performing tasks that do not need electricity. Refer to GP 10. Disconnect the power cord. Electricity can cause death or injury. Moving parts can cause injury.

Perform the steps that follow:

1. Switch off, then switch on the machine, GP 10.
2. Perform OF 3 Special Boot Modes RAP.
3. Ensure that all connectors on the ESS PWB, PL 18.1A Item 5 (B400) or PL 18.1B Item 5 (B405) and the MCU PWB, PL 18.2 Item 2 are securely connected. Ensure all surface mounted modules on the ESS PWB and MCU PWB are securely connected.
4. Check the harness, PL 2.1 Item 2 between the ROS and the MCU PWB.
5. Reload the software, GP 4.
6. If the fault persists, install new components as necessary:
   - ROS, PL 2.1 Item 4.
   - MCU PWB, PL 18.2 Item 2.

024-600 to 024-614 Counter Repair RAP

024-600 The billing master counter is automatically repaired.

024-601 The billing backup counter 1 is automatically repaired.

024-602 The billing backup counter 2 is automatically repaired.

024-603 The SW key master counter is automatically repaired.

024-604 The SW key backup counter 1 is automatically repaired.

024-605 The SW key backup counter 2 is automatically repaired.

024-606 Billing meter type is automatically repaired (ESS SEEP repaired).

024-607 Billing meter type is automatically repaired (ESS NVM repaired).

024-608 Billing meter type is automatically repaired (IOT NVM repaired).

024-609 Billing count type is automatically repaired (ESS SEEP repaired).

024-610 Billing count type is automatically repaired (ESS NVM repaired).

024-611 Billing count type is automatically repaired (IOT NVM repaired).

024-612 Modal break point is automatically repaired (ESS SEEP repaired).

024-613 Modal break point is automatically repaired (ESS NVM repaired).

024-614 Modal break point is automatically repaired (IOT NVM repaired).

Procedure

For information only, no service action necessary.

024-615 IOT Unsupported Drum Shut Off RAP

024-615 IOT unsupported drum shut off.

Procedure

For information only, no service action necessary.

024-700 Memory Shortage or No EMMC Card RAP

024-700 A job that could not be printed due to insufficient system memory or EMMC card not installed was received.

Procedure

WARNING

Ensure that the electricity to the machine is switched off while performing tasks that do not need electricity. Refer to GP 10. Disconnect the power cord. Electricity can cause death or injury. Moving parts can cause injury.

Perform the steps that follow:

1. Remove, then re-install the EMMC card, PL 18.1A Item 6 (B400) or PL 18.1B Item 6 (B405). If necessary, install a new EMMC card.
2. If installed, ensure the connectors on the HDD and ESS PWB, PL 18.1A Item 5 (B400) or PL 18.1B Item 5 (B405) are securely connected.
3. If the fault persists, install a new ESS PWB, PL 18.1A Item 91 (B400) or PL 18.1B Item 91 (B405).

024-701 Invalid Instruction of Face Inversion RAP

024-701 Job cancellation due to invalid invert instruction.

Procedure

Advise the customer to use paper that is within specification. Refer to GP 15 Paper and Media Size Specifications.

024-702 Paper Jam RAP

024-702 Job cancellation due to paper jam.

Procedure

Clear the paper jam.

024-703, 742, 775 Booklet Sheets Count Over RAP

024-703 Number of booklet sheets exceeded fail has occurred during printing.

024-742 The number of sheets per set exceeds a specific allowable number for a booklet.

024-775 A job that exceeds booklet paper quantity is cancelled.

Procedure

Perform the steps that follow:

1. Advise the customer to use paper of a lighter weight so as not to exceed the maximum output limit or use less pages.
2. If the fault persists, reload the software, GP 4.

024-707 Duplex Inversion Prohibited (Duplex) RAP

024-707 A duplex print instruction was received for duplex/invert prohibited paper.

Procedure

Perform the steps that follow:

1. Advise the customer to use paper that is within specification or to print simplex. Refer to GP 15 Paper and Media Size Specifications.
2. If the fault persists, reload the software, GP 4.

024-708 Duplex Inversion Prohibited (Face Down) RAP

024-708 A face down output instruction was received for duplex/invert prohibited paper.

Procedure

Perform the steps that follow:

1. Advise the customer to use paper that is within specification or to print face up. Refer to GP 15 Paper and Media Size Specifications.
2. If the fault persists, reload the software, GP 4.

024-746, 024-747 Print Request Failure RAP

024-746 There are parameters that are incompatible with the specified paper type.

024-747 The specified combination of parameters (stored file size, paper size, paper tray, duplex command, output tray) cannot be executed or continued.

Procedure

Advise the customer to use the correct print parameters.

024-748 Bates Numbering Digit Exceeded RAP

024-748 The number of bates numbering digits is exceeded.

Procedure

Perform the steps that follow:

1. Advise the customer to reduce the number of documents to less than the user-specified number or reduce the number of numbering digits.
2. If the fault persists, reload the software, GP 4.

024-910, 946, 959 Tray 1 Size Mismatch RAP

024-910 Size mismatch tray 1, measured length mismatch.

024-945 Tray 1 out of place.

024-959 Tray 1 size mismatch.

Procedure

WARNING

Ensure that the electricity to the machine is switched off while performing tasks that do not need electricity. Refer to GP 10. Disconnect the power cord. Electricity can cause death or injury. Moving parts can cause injury.

Perform the steps that follow:

1. Advise the customer to:
   a. Use paper that is within specification. Refer to GP 15 Paper and Media Specifications.
   b. Ensure the paper in tray 1, PL 9.2 Item 1, is the correct size for the job.
   c. Ensure tray 1 is fully inserted.
2. Perform OF 3 Special Boot Modes RAP.
3. Refer to Wiring Diagram 8. Enter dC330, code 071-102. Move the registration sensor shutters, PL 15.2 Item 14 to actuate the registration sensor. If the display does not change, install a new HVPS, PL 18.2 Item 5.

   NOTE: *The registration sensor is mounted on the HVPS.*

4. If the fault persists, reload the software, GP 4.

024-911, 947, 960 Tray 2 Size Mismatch RAP

024-911 Size mismatch tray 2, measured length mismatch.

024-947 Tray 2 out of place.

024-960 Tray 2 size mismatch.

Procedure

WARNING

Ensure that the electricity to the machine is switched off while performing tasks that do not need electricity. Refer to GP 10. Disconnect the power cord. Electricity can cause death or injury. Moving parts can cause injury.

Refer to the procedure that follows as necessary:

- GP 7 How to Check a Sensor.

Perform the steps that follow:

1. Advise the customer to:
   a. Use paper that is within specification. Refer to GP 15 Paper and Media Specifications.
   b. Ensure the paper in tray 2, PL 11.1A Item 15 or PL 11.1B Item 15, is the correct size for the job.
   c. Ensure tray 2 is fully inserted.
2. Perform OF 3 Special Boot Modes RAP.
3. Refer to Wiring Diagram 13. Enter dC330, code 071-119. Check the tray 2 path sensor, PL 11.4 Item 4.
4. Reload the software, GP 4.
5. If the fault persists, install a new option tray PWB assembly, PL 11.1A Item 5 (B400) or PL 11.1B Item 5 (B405).

024-912, 948, 961 Tray 3 Size Mismatch RAP

024-912 Size mismatch tray 3, measured length mismatch.

024-948 Tray 3 out of place.

024-961 Tray 3 size mismatch.

Procedure

WARNING

Ensure that the electricity to the machine is switched off while performing tasks that do not need electricity. Refer to GP 10. Disconnect the power cord. Electricity can cause death or injury. Moving parts can cause injury.

Refer to the procedure that follows as necessary:

- GP 7 How to Check a Sensor.

Perform the steps that follow:

1. Advise the customer to:
   a. Use paper that is within specification. Refer to GP 15 Paper and Media Specifications.
   b. Ensure the paper in tray 3 is the correct size for the job.
   c. Ensure tray 3 is fully inserted.
2. Perform OF 3 Special Boot Modes RAP.
3. Refer to Wiring Diagram 13. Enter dC330, code 071-120. Check the tray 3 path sensor, PL 11.4 Item 4.
4. Reload the software, GP 4.
5. If the fault persists, install a new option tray PWB assembly, PL 11.1A Item 5 (B400) or PL 11.1B Item 5 (B405).

024-913, 949, 962 Tray 4 Size Mismatch RAP

024-913 Size mismatch tray 4, measured length mismatch.

024-949 Tray 4 out of place.

024-962 Tray 4 size mismatch.

Procedure

WARNING

Ensure that the electricity to the machine is switched off while performing tasks that do not need electricity. Refer to GP 10. Disconnect the power cord. Electricity can cause death or injury. Moving parts can cause injury.

Refer to the procedure that follows as necessary:

- GP 7 How to Check a Sensor.

Perform the steps that follow:

1. Advise the customer to:
   a. Use paper that is within specification. Refer to GP 15 Paper and Media Specifications.
   b. Ensure the paper in tray 4 is the correct size for the job.
   c. Ensure tray 4 is fully inserted.
2. Perform OF 3 Special Boot Modes RAP.
3. Refer to Wiring Diagram 13. Enter dC330, code 071-121. Check the tray 4 path sensor, PL 11.4 Item 4.
4. Reload the software, GP 4.
5. If the fault persists, install a new option tray PWB assembly, PL 11.1A Item 5 (B400) or PL 11.1B Item 5 (B405).

024-934 Paper Type Mismatch RAP

024-934 The fed paper is different from that specified in the controller (plain paper and heavy-weight cannot be recognized).

Procedure

WARNING

Ensure that the electricity to the machine is switched off while performing tasks that do not need electricity. Refer to GP 10. Disconnect the power cord. Electricity can cause death or injury. Moving parts can cause injury.

Perform the steps that follow:

1. Load the specified media.
2. Ensure that all connectors on the ESS PWB, PL 18.1A Item 5 (B400) or PL 18.1B Item 5 (B405) and the MCU PWB, PL 18.2 Item 2 are securely connected. Ensure all surface mounted modules on the ESS PWB and MCU PWB are securely connected.
3. Reload the software, GP 4.

024-939 OHP Type Mismatch RAP

024-939 Paper type mismatch. the system is shut down (stop) if transparencies with borders are detected regardless of the paper type setting in the controller.

Procedure

WARNING

Ensure that the electricity to the machine is switched off while performing tasks that do not need electricity. Refer to GP 10. Disconnect the power cord. Electricity can cause death or injury. Moving parts can cause injury.

Perform the steps that follow:

1. Check the UI settings, ensure that bypass tray is selected and the correct media used.
2. Ensure that all connectors on the ESS PWB, PL 18.1A Item 5 (B400) or PL 18.1B Item 5 (B405) and the MCU PWB, PL 18.2 Item 2 are securely connected. Ensure all surface mounted modules on the ESS PWB and MCU PWB are securely connected.
3. Reload the software, GP 4.

024-942 024-975 Booklet Sheet Count RAP

024-942 Booklet sheets over count. The number of sheets in a booklet is over the limit.

024-975 Number of Booklet sheets exceeded (occurs at process with no images).

Procedure

WARNING

Ensure that the electricity to the machine is switched off while performing tasks that do not need electricity. Refer to GP 10. Disconnect the power cord. Electricity can cause death or injury. Moving parts can cause injury.

Perform the steps that follow:

1. Ensure that the job is programmed in compliance with the maximum number of sheets for a booklet.
2. Ensure that all connectors on the ESS PWB, PL 18.1A Item 5 (B400) or PL 18.1B Item 5 (B405) and the MCU PWB, PL 18.2 Item 2 are securely connected. Ensure all surface mounted modules on the ESS PWB and MCU PWB are securely connected.
3. Reload the software, GP 4.

024-950 Tray 1 Empty RAP

024-950 Tray 1 is empty.

Initial Actions

WARNING

Ensure that the electricity to the machine is switched off while performing tasks that do not need electricity. Refer to GP 10. Disconnect the power cord. Electricity can cause death or injury. Moving parts can cause injury.

Switch off, then switch on the machine, GP 10.

Procedure

Refer to the procedure that follows as necessary:

- GP 7 How to Check a Sensor.

Perform the steps that follow:

1. Refer to Wiring Diagram 8. Enter dC330, code 071-101. Move the no paper tray sensor shutters, PL 15.2 Item 14 to actuate the tray 1 no paper sensor. If the display does not change, install a new HVPS, PL 18.2 Item 5.

   NOTE: *The tray 1 no paper sensor is mounted on the HVPS.*

2. If the fault persists, reload the software, GP 4.

024-951 Tray 2 Empty RAP

024-951 Tray 2 is empty.

Initial Actions

WARNING

Ensure that the electricity to the machine is switched off while performing tasks that do not need electricity. Refer to GP 10. Disconnect the power cord. Electricity can cause death or injury. Moving parts can cause injury.

Switch off, then switch on the machine, GP 10.

Procedure

Refer to the procedure that follows as necessary:

- GP 7 How to Check a Sensor.

Perform the steps that follow:

1. Refer to Wiring Diagram 13. Enter dC330, code 071-116. Check the tray 2 no paper sensor, PL 11.2 Item 2.
2. Reload the software, GP 4.
3. If the fault persists, install a new option tray PWB assembly, PL 11.1A Item 5 (B400) or PL 11.1B Item 5 (B405).

024-952 Tray 3 Empty RAP

024-952 Tray 3 is empty.

Initial Actions

WARNING

Ensure that the electricity to the machine is switched off while performing tasks that do not need electricity. Refer to GP 10. Disconnect the power cord. Electricity can cause death or injury. Moving parts can cause injury.

Switch off, then switch on the machine, GP 10.

Procedure

Refer to the procedure that follows as necessary:

- GP 7 How to Check a Sensor.

Perform the steps that follow:

1. Refer to Wiring Diagram 13. Enter dC330, code 071-117. Check the tray 3 no paper sensor, PL 11.2 Item 2.
2. Reload the software, GP 4.
3. If the fault persists, install a new option tray PWB assembly, PL 11.1A Item 5 (B400) or PL 11.1B Item 5 (B405).

024-953 Tray 4 Empty RAP

024-953 Tray 4 is empty.

Initial Actions

WARNING

Ensure that the electricity to the machine is switched off while performing tasks that do not need electricity. Refer to GP 10. Disconnect the power cord. Electricity can cause death or injury. Moving parts can cause injury.

Switch off, then switch on the machine, GP 10.

Procedure

Refer to the procedure that follows as necessary:

- GP 7 How to Check a Sensor.

Perform the steps that follow:

1. Refer to Wiring Diagram 13. Enter dC330, code 071-118. Check the tray 4 no paper sensor, PL 11.2 Item 2.
2. Reload the software, GP 4.
3. If the fault persists, install a new option tray PWB assembly, PL 11.1A Item 5 (B400) or PL 11.1B Item 5 (B405).

024-954, 024-958 Bypass Tray Fault RAP

024-954 The bypass tray is empty.

024-958 Bypass tray paper size mismatch.

Initial Actions

WARNING

Ensure that the electricity to the machine is switched off while performing tasks that do not need electricity. Refer to GP 10. Disconnect the power cord. Electricity can cause death or injury. Moving parts can cause injury.

Switch off, then switch on the machine, GP 10.

Procedure

Refer to the procedure that follows as necessary:

- GP 7 How to Check a Sensor.

Perform the steps that follow:

1. Refer to Wiring Diagram 8. Enter dC330, code 071-100. Move the MSI no paper actuator, PL 13.1 Item 4 to actuate the MSI no paper sensor. If the display does not change, install a new HVPS, PL 18.2 Item 5.

   NOTE: *The tray 1 no paper sensor is mounted on the HVPS.*

2. Reload the software, GP 4.

024-965, 024-966 ATS/APS RAP

024-965 The paper specified for printing is not loaded in the tray.

024-966 The paper specified for printing cannot be detected.

Procedure

WARNING

Ensure that the electricity to the machine is switched off while performing tasks that do not need electricity. Refer to GP 10. Disconnect the power cord. Electricity can cause death or injury. Moving parts can cause injury.

Perform the steps that follow:

1. Reload the relevant paper tray.
2. If the fault persists, perform the steps that follow:
   a. Switch off, then switch on the machine, GP 10.
   b. Ensure that all connectors on the ESS PWB, PL 18.1A Item 5 (B400) or PL 18.1B Item 5 (B405) and the MCU PWB, PL 18.2 Item 2 are securely connected. Ensure all surface mounted modules on the ESS PWB and MCU PWB are securely connected.
   c. Reload the software, GP 4.

025-596, 025-597 HDD Diagnostics RAP

025-596 An NG occurred when HDD fail forecast of diagnostics was executed.

025-597 An error occurred when HDD initialization of diagnostics was executed.

Procedure

Perform the 016-210, 506, 777, 780, 798 HDD Error RAP.

026-400 USB Host Connection Number Exceeded RAP

026-400 The number of machines that are connected to the USB Host Port of this machine has exceeded the maximum permissible number of connections.

Procedure

Perform the steps that follow:

1. Switch off, then switch on the machine, GP 10.
2. Have the customer disconnect some of the machines that are connected to this USB host port and ensure that the number of connected machines are below the maximum permissible number of connections.

026-402 Changed IOT Speed RAP

026-402 The IOT has started the print at a low speed.

Procedure

For information only, no service action necessary.

026-700 LDAP Protocol Error RAP

026-700 It was detected that the error response returned from the server does not exist in the LDAP protocol definitions.

Procedure

Perform the steps that follow:

1. Advise the customer that this fault is caused when the server uses an undefined LDAP protocol that is not supported by the machine. Correct any mistakes in server settings or client operation.
2. If the fault persists, reload the software, GP 4.

026-701 Address Book Request Overflow RAP

026-701 The software in the machine was subjected to a large amount of simultaneous address queries from multiple machine panel and Web UI input devices. The processing capacity of the JRM directory service has been exceeded.

Procedure

Perform the steps that follow:

1. Advise the customer that when performing simultaneous queries on the address book in the machine from multiple machine panel and Web UI input devices, lower the query interval.
2. If the fault persists, reload the software, GP 4.

026-702 Address Book Directory Service Overflow RAP

026-702 The JRM directory service, which is an internal software of the machine, has simultaneously received two or more requests for the same operation.

Procedure

Reload the software, GP 4.

026-703 Abort With Logout RAP

026-703 At installation of additional document, authentication is already cancelled.

Procedure

Have the customer make it impossible for authentication to be cancelled at additional document loading.

026-704 DocuWorks Error RAP

026-704 In process of operating DocuWorks decomposer, there has occurred; a syntax error, use of an undefined command, a parameter error, damage to DocuWorks file, or an internal error of DocuWorks decomposer.

Procedure

Have the customer print from DocuWorks viewer by use of printer driver (ART-EX, PCL, etc.).

026-705 DocuWorks Short of Memory RAP

026-705 In process of operating DocuWorks decomposer, lack of memory has been detected.

Procedure

Have the customer:

1. Change print mode from High Resolution to Standard or from Standard to High Speed.
2. Print from DocuWorks viewer by use of printer driver (ART-EX, PCL, etc.).

026-706, 026-707 DocuWorks Error RAP

026-706 DocuWorks decomposer has processed a DocuWorks document printing of which is prohibited.

026-707 In the processing of a security-protected DocuWorks file, either of the password set on the UI panel and the XPJL specified password (set in ContentsBridge utility) does not match.

Procedure

Have the customer:

1. Enter the correct password.
2. Enter Full Access Password, etc. from DocuWorks viewer then disable printing prohibited. Print using printer driver (ART-EX, PCL, etc.).

026-708 URL Data Over Size RAP

026-708 The size of a scan to URL job has exceeded the upper limit of the size of scanned data per job.

Procedure

Have the customer:

1. Reduce a resolution send parameter (image-to-send quality) then re-send the job.
2. Reduce a magnification send parameter, then re-send the job.
3. Increase the maximum file accumulated data size.

026-709 URL HDD Full RAP

026-709 The HDD partition for accumulated scan to URL data has become full, causing the job to fail.

Procedure

For information only, no service action necessary. Advise the customer to wait for approximately one day until an automatic deletion of documents makes space available. Then re-run the job.

026-710 S/MIME Unsupported Cipher RAP

026-710 The device has received a S/MIME encrypted mail that is encrypted by an unsupported encryption method.

Procedure

Perform the steps that follow:

1. Have the customer:
   a. Ask the sender of the S/MIME encrypted mail to encrypt the mail by the encryption method (3DES), then re-send it.
   b. Set FIPS140 Authentication Mode of the device to off.
2. If the fault persists, perform the 016A Workflow Scanning Error Entry RAP.

026-711 Multi-Page File Size RAP

026-711 The upper limit size of the multi-page file format generated in scan service has been exceeded.

Procedure

Have the customer:

1. Reduce the resolution level (scanned-image quality), then re-run the job.
2. Reduce the number of documents, then re-run the job.

026-712 HTTP Out Job Overlap Error RAP

026-712 The high compression/OCR processing module has detected that a job that specifies high compression/OCR processing and is to be taken out using HTTP has started while another job to be sent via the network is undergoing high compression/OCR processing.

Procedure

For information only, no service action necessary. Advise the customer that as a job specifying high compression/OCR processing is in progress, wait until the job is complete before running another job.

026-718 PS Print Instruction Fail RAP

026-718 An erroneous combination of print parameters selected (finishing, paper size, paper tray, Duplex instructions, output tray) prevents the device from running the job.

Procedure

Perform the steps that follow:

1. Have the customer correctly set finishing, paper size, paper tray, duplex instructions, and output tray options, then re-run the job.
2. If the fault persists, reload the software, GP 4.

026-719 Internal Error in Scan RAP

026-719 An internal error has occurred.

Procedure

Perform the steps that follow:

1. Have the customer retry the same operation.
2. If the fault persists, reload the software, GP 4.

026-720 to 026-723 Media Error RAP

026-720 The media does not have enough space available.

026-721 An attempt to access media has failed.

026-722 The media is not formatted.

026-723 An attempt to access media has failed.

Procedure

Have the customer:

1. Check that the media exists where scanned documents will be sent.
2. Check that the PC can access the media where scanned documents will be sent.
3. Check that a file can be created in a specified storage.
4. Check that the media is neither removed nor reinserted while being referred to or that during that time, other media is not inserted.

026-724, 026-725 Remote Download File Error RAP

026-724 The size of the remote download file reported from the EP center is different from that of the actual downloaded file.

026-725 The checksum of the remote download file reported from the EP center does not match that of the downloaded file.

Procedure

Advise the customer that it is necessary to check the size of the file registered with the EP center and the size stored in the SW repository.

026-726 Inconsistent Options RAP

026-726 The device configuration info included in XPJL does not match the actual configuration.

Procedure

Have the customer set up the device configuration info on the printer driver screen so that it can match the actual configuration.

026-727 Media Filepath Fail RAP

026-727 The storage path with the specified character string length (including the filename) cannot be created in the media.

Procedure

Have the customer shorten the specified storage location or the filename.

026-728, 026-729 WSD Scan Error RAP

026-728 An error occurred during communication with the WSD scan client. WSD scan client cancelled the job.

026-729 An error occurred during communication with the WSD scan client. WSD scan client cancelled the job or a scan from the DADF was performed from an application other than Windows fax and scan.

Procedure

Have the customer:

1. Check whether the transfer destination WSD scan client and the machine are able to communicate via the network. For example:
   - Check whether the WSD scan client has enough free capacity.
   - Check the connection of the network cable.
2. When using DADF, perform the scan using Windows Fax & Scan. Or, change to the platen to perform the scan.

026-730 Tray Paper Size Not Detected RAP

026-730 The paper size of the paper tray selected is unknown.

Procedure

Perform the relevant procedure:

- 024-910, 946, 959 Tray 1 Size Mismatch RAP.
- 024-911, 947, 960 Tray 2 Size Mismatch RAP.
- 024-912, 948, 961 Tray 3 Size Mismatch RAP.
- 024-913, 949, 962 Tray 4 Size Mismatch RAP.

026-731 to 026-733 PJL Fail RAP

026-731 The PIN number that is specified by PJL command is different from the number that is calculated from the machine's serial number.

026-732 The print count that is specified by PJL command has exceeded the machine's total impression meter value by +100.

026-733 The password that is specified by PJL command is different from the one that is set in the machine.

Procedure

Have the customer correct the PIN number, print count or password that is specified by PJL Command, then try again.

026-734 PJL Diag Mode RAP

026-734 Unable to transition to the PJL Diag Mode.

Procedure

Have the customer:

1. Ensure that the job has completed, then try again.
2. After completing a panel operation, wait at least 1 minute before starting the download operation.

026-739 Waiting Scan Job Deleted RAP

026-739 When there are paused scan jobs during the successful completion of a login/logout.

Procedure

For one occurrence, take no action. If the fault persists, reload the software, GP 4.

027-442, 443, 444 Duplicate IP Address 1 RAP

027-442 IPv6 - stateless auto setting IP address 1 is duplicated.

027-443 IPv6 - stateless auto setting IP address 2 is duplicated.

027-444 IPv6 - stateless auto setting IP address 3 is duplicated.

Procedure

Perform the steps that follow:

1. Have the customer either change the IPv6 Stateless Auto Setting Address 1, 2 or 3 of this device or the IPv6 address of the other device on the network.
2. If the fault persists, perform the 016A Workflow Scanning Error Entry RAP.

027-445 Illegal IP Address RAP

027-445 IPv6 - manually set IP address is invalid.

Procedure

Perform the steps that follow:

1. Have the customer change the IPv6 (Manual Setting Address) of this machine to the IPv6 address that can be used as the self-machine address.
2. If the fault persists, perform the 016A Workflow Scanning Error Entry RAP.

027-446 Duplicate IP Address 2 RAP

027-446 IPv6 - automatically set IP address is duplicated.

Procedure

Perform the steps that follow:

1. Have the customer change the IPv6 (Manual Setting Address) of this machine to the IPv6 address that can be used as the self-machine address.
2. If the fault persists, perform the 016A Workflow Scanning Error Entry RAP.

027-447 Duplicate IP Address 3 RAP

027-447 IPv6 - link local IP address is duplicated.

Procedure

Perform the steps that follow:

1. Have the customer change the IPv6 Link Local Address of this device or the IPv6 address of the other device on the network.
2. If the fault persists, perform the 016A Workflow Scanning Error Entry RAP.

027-452 Duplicate IP Address 4 RAP

027-452 A PC with the same IP address exists on the network.

Procedure

Perform the steps that follow:

1. Have the customer change the duplicated IP address of the PC.
2. If the fault persists, perform the 016A Workflow Scanning Error Entry RAP.

027-500 SMTP Server Fail for Mail IO RAP

027-500 SMTP server address resolution fail for mail IO.

Procedure

Have the customer:

1. Check with the System Administrator that the mail server has been launched and the environment is already used for other purposes (such as for PC).
2. Check that a correct SMTP server address is reflected in the device setting list:
   a. When the SMTP server address is specified using IP address, set a correct IP address.
   b. When the SMTP server address is specified using FQDN, check that the FQDN name is correct. Also check that a correct DNS server address is set for the device, and set a correct IP address.

027-501 POP Server Fail for Mail IO RAP

027-501 Incorrect POP server name was detected.

Procedure

Have the customer:

1. Check with the System Administrator that the mail server has been launched and the environment is already used for other purposes (such as for PC).
2. Check that a correct POP server address is reflected in the device setting list:
   a. When the POP server address is specified using IP address, set a correct IP address.
   b. When the POP server address is specified using FQDN, check that FQDN name is correct. Also check that a correct DNS server address is set for the device, and set a correct IP address.

027-502 POP Authentication Fail for Mail IO RAP

027-502 POP authentication fail for mail IO.

Procedure

Perform the steps that follow:

1. Have the customer specify the correct POP server authentication information.
2. Perform the 027-501 POP Server Fail for Mail IO RAP, then have the customer specify a correct POP User Name.
3. If the fault persists, perform the 016A Workflow Scanning Error Entry RAP.

027-503, 504, 533, 773, 785, 786 Server Communication Timeout RAP

027-503 Time to communicate with the POP server ran out (after connection to the server).

027-504 Internal error or unexpected server response received (at any time).

027-533 An internal error has occurred during SMB scan

027-773 Time to communicate with the SMTP server ran out (after connection to the server).

027-785 Response timeout occurs from the destination WebDAV server.

027-786 WebDAV server timeout is answered.

Procedure

Have the customer wait for a while, then perform the operation again.

027-513 SMB Scan Client Access RAP

027-513 In scan to SMB, the user has no right to access the SMB server.

Procedure

Have the customer check if the specified user has read/write access in a file or folder in the specified place.

027-514 Host Name Solution Error in SMB RAP

027-514 Unable to resolve hostname during SMB scan.

Procedure

Have the customer check the connection to the DNS. Or, check whether the SMB server name of the transfer destination has been registered in the DNS.

027-515 DNS Server Setup in SMB RAP

027-515 The DNS server was not set during SMB scan.

Procedure

Have the customer set the DNS server address. Or, set the SMB server address of the transfer destination using IP address.

027-516 Server Connection Error in SMB RAP

027-516 Problem with connection to server during SMB scan.

Procedure

Have the customer:

1. Check that network communication between the transfer destination SMB server and this machine is available, by checking:
   a. The connection of network cables.
   b. The TCP/IP settings.
   c. For communication through port 137 (UDP), port 138 (UDP) and port 139 (TCP).
2. Check the network settings that follow to see if the computer operates as an SMB server.
   a. Check that the file sharing service for Microsoft network is enabled.
   b. Check that NetBIOS over TCP/IP is enabled in the TCP/IP settings.
   c. Check the file sharing service (communications through port 137 (UDP), port 138 (UDP) and port 139 (TCP)) is allowed in the firewall settings.
3. For communication that goes beyond the subnet, check the WINS server settings and check whether the server name address can be resolved correctly.
4. Check whether the NetBIOS interface device at the transfer destination SMB server has started.

027-518 Login Name or Password Error in SMB RAP

027-518 Login name or a password error in SMB.

Procedure

Have the customer check the password that was set for the shared folder.

027-519 Scanning Picture Preservation Place Error RAP

027-519 Scan image storage destination or file name specification error during scanner (save to PC) SMB transfer.

Procedure

Have the customer:

1. Check if the storage destination is correct.
2. Check if a prohibited character was detected in the specified storage destination or file name.
3. Check if the specified storage destination is linked to a different shared folder due to the distributed file system (DFS).

027-520 File Name Acquisition Failure RAP

027-520 Unable to obtain the file/folder name on the SMB scan server.

Procedure

Switch off, then switch on the machine, GP 10.

027-521 File Name Suffix Limit Over in SMB RAP

027-521 The SMB scan file name/folder name suffix has exceeded the limit value.

Procedure

Have the customer change the file name/destination folder on the SMB scan server. Else, move or delete the files in the destination folder.

027-522 File Creation Failure in SMB RAP

027-522 Failed to create an SMB scan file.

Procedure

Have the customer:

1. Check if the specified file name already exists on the server.
2. Check if the specified file name is in use.
3. Check if the specified file name already exists as a directory.
4. Check if a prohibited character was detected in the specified file name.

027-523 Lock Folder Creation Failure in SMB RAP

027-523 Failed to create an SMB scan lock folder.

Procedure

Have the customer:

1. Manually delete the lock directory (*.LCK) from the transfer destination.
2. Check whether a folder with the same name as the specified name already exists.

027-524 Folder Creation Failure in SMB RAP

027-524 Failed to create an SMB scan folder.

Procedure

Have the customer check if a file or folder with the same name as the specified name exists on the SMB server.

027-525, 027-527 File Delete Failure in SMB RAP

027-525 Failed to delete an SMB scan file.

027-527 Failed to delete an SMB scan folder.

Procedure

Have the customer check whether the file in the specified storage destination is being used by another user.

027-526 Lock Folder Delete Failure in SMB RAP

027-526 Failed to delete an SMB scan lock folder.

Procedure

Have the customer manually delete the lock directory (*.LCK) from the transfer destination, then retry the job.

027-528 Data Write Failure to SMB Server RAP

027-528 The storage destination on the SMB scan data server has no free space.

Procedure

Have the customer check that the storage destination has enough free space.

027-529 Data Read Failure From SMB Server RAP

027-529 Unexpected error of the SMB scan data server.

Procedure

Have the customer log in to the SMB server from another PC using the same user name and check whether they can write a file into the same storage destination on that SMB server.

027-530 File Name Duplicate Failure in SMB RAP

027-530 Cancel Job is selected for SMB scan File Name Conflict.

Procedure

Have the customer set File Name Conflict to other than Cancel Job.

027-531 SMB Scan Filing Policy Injustice RAP

027-531 Incorrect SMB scan filing policy (when additional items are selected).

Procedure

Have the customer check that the file format is not set to Multi-page When Add is selected for File Name Conflict.

027-532 NEXTNAME File Access Error in SMB RAP

027-532 A file access error has occurred during scanner (save to PC) SMB transfer.

Procedure

Have the customer check that the NEXTNAME.DAT file is correct when Add is selected for File Name Conflict.

027-543 SMB Server Name Specification Error RAP

027-543 The SMB server (NetBIOS) name specification is incorrect.

Procedure

Have the customer check that the server name of the SMB server is correct.

027-547, 027-548 SMB Protocol Errors 1 RAP

027-547 SMB protocol error (4-007), the scan domain name specification is incorrect.

027-548 SMB protocol error (4-008), the scan user name specification is incorrect

Procedure

Advise the customer to have the system administrator set the domain name and user name correctly.

027-549, 027-572 to 027-576 SMB Protocol Error 4-009 RAP

027-549 SMB protocol error (4-009), the specification of password is incorrect.

027-572 SMB protocol error (4-032), incorrect parameter.

027-573 SMB protocol error (4-033), incorrect character code.

027-574 SMB protocol error (4-034), incorrect data size.

027-576 SMB protocol error (4-036), incorrect domain data size.

Procedure

Have the customer perform the operation again.

027-564 SMB Protocol Error 4-024 RAP

027-564 SMB protocol error (4-024), the host is missing.

Procedure

Have the customer:

1. Check that the authentication server and the device can communicate through the network (check the network group, TCP/IP settings, check the communication at Port No. 137 (UDP)/Port No. 138 (UDP)/Port No. 139 (TCP)).
2. If the authentication server and the device are connected to different subnets, check that the device has settings that can resolve the address of the authentication server.
3. Check if the NetBIOS over TCP/IP has become enabled at the authentication server settings:
   a. Check if the authentication server and the device can resolve the addresses from the WINS server.
   b. Check if the authentication server and the device can resolve the addresses from the DNS server.
4. Check if the NetBIOS over TCP/IP has become enabled at the authentication server settings.
5. Check at the Internet connection firewall if the communication through Ports 137, 138 and 139 are not blocked.

027-565, 027-578 SMB Protocol Errors 2 RAP

027-565 SMB protocol error (4-025), cannot connect.

027-578 SMB protocol error (4-038), communication timeout has occurred.

Procedure

Have the customer check that the authentication server and the device can communicate through the network (check the network group, TCP/IP settings, check the communication at Port No. 137 (UDP)/Port No. 138 (UDP)/Port No. 139 (TCP)).

027-566 SMB Protocol Error 4-026 RAP

027-566 SMB protocol error (4-026), the library has not been initialized.

Procedure

Have the customer check if the SMB client has been started.

027-569 SMB (TCP/IP) Not Started RAP

027-569 SMB (TCP/IP) is not started

Procedure

Have the customer check that SMB (TCP/IP) is enabled.

027-584 SMB Protocol Error 4-044 RAP

027-584 SMB protocol error (4-044), authentication server common security mode is operating.

Procedure

Have the customer set the authentication server to Windows other than Win95/Win98/Me.

027-585 SMB Protocol Error 4-045 RAP

027-585 SMB protocol error (4-045), scan login not available time period.

Procedure

Advise the customer to check with the system administrator for the time period when logging in is allowed.

027-586 SMB Protocol Error 4-046 RAP

027-586 SMB protocol error (4-046), the password has expired.

Procedure

Advise the customer to obtain a valid password from the system administrator.

027-587 SMB Protocol Error 4-047 RAP

027-587 SMB protocol error (4-047), the password must be changed.

Procedure

Advise the customer to request the system administrator to disable the change password at next login setting.

027-588, 027-589 SMB Protocol Errors 3 RAP

027-588 SMB protocol error (4-048), the user account is disabled.

027-589 SMB protocol error (4-049), locked out.

Procedure

Advise the customer to request the system administrator to enable or unlock the user account. as necessary.

027-590 SMB Protocol Error 4-050 RAP

027-590 SMB protocol error (4-050), the user account has expired.

Procedure

Advise the customer to obtain a valid user account from the system administrator or request the system administrator extend the validity period of the account.

027-591 SMB Protocol Error 4-051 RAP

027-591 SMB protocol error (4-051), the user account is restricted. Blank password is not allowed.

Procedure

Advise the customer to request the system administrator set a user password.

027-600 External Print Check Mode Error RAP

027-600 External print check mode error.

Procedure

Switch off, then switch on the machine, GP 10.

027-700 Mail Address Domain Error RAP

027-700 The domain of the destination mail address is designated as a prohibited domain.

Procedure

Have the customer check that the domain of the destination mail address is not designated as a prohibited domain.

027-701 Disconnected Network Cable RAP

027-701 In external authentication, the disconnected cable is detected.

Procedure

Ensure the network cable is connected correctly.

027-702 to 027-709 Certificate for Addresses Error RAP

027-702 No certificate for the destination exists (before connection to the server).

027-703 The certificate for the destination expired (before connection to the server).

027-704 The certificate for the destination is not reliable (before connection to the server).

027-705 The certificate for the destination existed on a list of revoked certificates (before connection to the server).

027-706 No device certificate exists (before connection to the server).

027-707 The device certificate expired (before connection to the server).

027-708 The device certificate is not reliable (before connection to the server).

027-709 The certificate for the destination existed on a list of revoked certificates (before connection to the server).

Procedure

Perform the steps that follow:

1. Have the customer:
   a. Store the correct certificate for the destination in the machine. Check the items that follow:
      i. That the term for which the certificate is valid.
      ii. The machines time is correct.
   b. Check the certification path for the destination certificate and import the necessary CA certificate.
   c. Store in this machine a destination certificate that is not on the list of revoked certificates.
   d. Check that the mail address written on the device certificate is the same as that set up on the device.
2. If the fault persists, reload the software, GP 4.

027-710 to 027-715 S/MIME Mail Error RAP

027-710 The mail I/O received S/MIME mail even though S/MIME was disabled.

027-711 SMIME mail certificate retrieval error.

027-712 Invalid S/MIME mail certificate error.

027-713 Receive S/MIME mail tampered error.

027-714 S/MIME mail sender impersonation error.

027-715 S/MIME mail certificate not supported.

Procedure

Perform the steps that follow:

1. Have the customer:
   a. Enable S/MIME setting in the machine.
   b. Register the sender certificate in the machine or change the mailer options so that the S/MIME signature mails from the sender will be sent with the certificate.
   c. Check that the signature bearer of the CA certificate is registered in the device.
   d. Check that the mail address written on the device certificate is the same as that set up on the device.
2. Advise the customer that the sender needs to send a mail that is signed with a valid certificate because the sender certificate has expired.
3. Advise the customer that the device may be blocking the attacks.
4. Reload the software, GP 4.
5. If the fault persists, perform the 016A Workflow Scanning Error Entry RAP.

027-716 Unsigned Mail Receipt Was Rejected RAP

027-716 Prohibited unsigned mail was detected. All the S/MIME unsigned mails (including standard mails and S/MIME encrypted mails) are discarded.

Procedure

Perform the steps that follow:

1. Reload the software, GP 4.
2. If the fault persists, perform the 016A Workflow Scanning Error Entry RAP.

027-717 No MX Record at DNS RAP

027-717 An enquiry was sent to the DNS server for the MX record, but it cannot be obtained.

Procedure

Have the customer:

1. Check with the DNS server administrator on the existence of DNS/MX record.
2. Check that the DNS server settings of the device is set properly.

027-720, 027-721 Extension Server Error RAP

027-720 Server for application interface cannot be found during web service interface.

027-721 Application interface destination during web service interface - not found.

Procedure

Perform the steps that follow:

1. Have the customer check that the DNS server address is set properly. Check that the PC running the application interface is registered in DNS.
2. Reload the software, GP 4.
3. If the fault persists, perform the 016A Workflow Scanning Error Entry RAP.

027-722 Extension Server Timeout RAP

027-722 Application interface during web service interface - timeout.

Procedure

Perform the steps that follow:

1. Advise the customer:
   a. That if a number of documents is specified for scanning, scan one document and store it.
   b. That when scanning and storing are successful, change the application interface timeout value. If scanning and storing are not successful,
   c. To check that the scan document can be uploaded from the PC browser. When uploading is successful, change the application interface timeout value.
2. If the fault persists, reload the software, GP 4.

027-723 Extension Server Authentication Fail RAP

027-723 Application interface during web service interface - authentication failure.

Procedure

Perform the steps that follow:

1. Have the customer check the user name and password to be entered for creating a job flow.
2. If the fault persists, reload the software, GP 4.

027-724, 725, 726 Extension Server Access Fail RAP

027-724 Application interface during web service interface - access failure.

027-725 Application interface during web service interface - job operation failure.

027-726 Application interface during web service interface - unknown job status.

Procedure

Perform the steps that follow:

1. Have the customer check that the application interface is working correctly.
2. If the fault persists, reload the software, GP 4.

027-727 Extension Server Parameters RAP

027-727 Application interface during web service - invalid parameter.

Procedure

Perform the steps that follow:

1. Have the customer check the parameters for creating a job flow.
2. If the fault persists, reload the software, GP 4.

027-728 Extension Server File Exceeded RAP

027-728 The number of files requested to be sent exceeded the maximum number of files that can be sent during Web service interface (this occurs when a single-page document is being stored).

Procedure

Perform the steps that follow:

1. Have the customer set a job so that the maximum number of files that can be sent will not be exceeded.
2. If the fault persists, reload the software, GP 4.

027-730 SMTP Mail Division Error RAP

027-730 A mail was split in linking to the system.

Procedure

Have the customer increase the preset pagination value, or reduce the number of original pages scanned.

027-732 Server Access Error RAP

027-732 Job template server access error.

Procedure

Have the customer check that the server disk is normal and has free space, and then retry the operation.

027-733 Server SSL Error RAP

027-733 The SSL setting for the job template server did not become enabled.

Procedure

Have the customer check that the SSL setting for the job template server is enabled.

027-734 Server Certificate Error RAP

027-734 The SSL setting for the job template server did not become enabled.

Procedure

Have the customer:

1. Using the HTTPS protocol, check whether the job template server is accessible from the PC.
2. Check whether the SSL server certificate of the job template server is registered in the device.
3. Check whether the SSL server certificate of the job template server is valid. For example, check that:
   a. The certificate has not expired yet.
   b. The time that is set in the device is correct.
   c. It is not in the discard list.
   d. The certificate path of the SSL server certificate and import any necessary CA certificate.
4. If the certificate is not registered in the job template server, disable the device certificate validation.

027-735 Device SSL Configuration Error RAP

027-735 When SSL transfer was instructed, the SSL setting of the device is disabled.

Procedure

Have the customer enable the SSL settings of the machine or specify HTTP as the transfer protocol.

027-736 Device Certificate Error RAP

027-736 When server certificate validation is instructed, the server certificate validation of the device is disabled.

Procedure

Have the customer enable the server certificate validation settings of the machine or disable the server certificate validation setting during transfer.

027-737 Template Server Read Error RAP

027-737 An error was received from the server to a FTP command 'TYPE A', 'LIST', or 'RETR'.

Procedure

Perform the steps that follow:

1. Have the customer check that Read Authorization is established for the storage destination server directory set as a resource.
2. If the fault persists, reload the software, GP 4.

027-739 Invalid Template Server Path RAP

027-739 An error was received from the server to the FTP command 'CWD'.

Procedure

Perform the steps that follow:

1. Have the customers set the resource of the storage destination path from the client PC.
2. If the fault persists, reload the software, GP 4.

027-740 Template Server Login Error RAP

027-740 Login to the FTP Server failed.

Procedure

Perform the steps that follow:

1. Have the customer check the user information:
   a. Set the log-in name and password in the job template file storage destination.
   b. From some other PC connected to the network, check that they can log in with the relevant account.
   c. From a client PC, set a login name and password as a resource
2. If the fault persists, reload the software, GP 4.

027-741 Template Server Connect Fail RAP

027-741 Cannot connect to the job template pool server.

Procedure

Perform the steps that follow:

1. Have the customer:
   a. Check hat the network cable is connected correctly.
   b. From the destination server, ping the machine.
   c. Perform the ping test on the destination server from PSW.
   d. From a client PC, check that the FTP connection to the destination server is possible.
2. If the fault persists, reload the software, GP 4.

027-742 HDD File System Full RAP

027-742 The HDD was full when writing to a local HDD job template or when writing temporary work files.

Procedure

Perform the steps that follow:

1. Have the customer:
   a. Wait a while then try again as scanned images may cause the HDD to be full.
   b. Delete the files in the HDD.
2. If the fault persists, perform the 016-210, 506, 777, 780, 798 HDD Error RAP.

027-743 Template Server Install Error RAP

027-743 The address format of the job template pool server is incorrect.

Procedure

Perform the steps that follow:

1. Have the customer set the parameters related to the job template pool server.
2. If the fault persists, reload the software, GP 4.

027-744 Template Server Error 1 RAP

027-744 An error occurred while calling the DNS resolution library.

Procedure

Perform the steps that follow:

1. Have the customer check the connection to the DNS and whether the job template pool server domain name has been registered in the DNS.
2. Reload the software, GP 4.
3. If the fault persists, perform the 016A Workflow Scanning Error Entry RAP.

027-745 Template Server Error 2 RAP

027-745 The job template pool server address cannot be resolved (the DNS address is not set).

Procedure

Perform the steps that follow:

1. Have the customer set the DNS address or set the job template pool server address using IP address.
2. Reload the software, GP 4.
3. If the fault persists, perform the 016A Workflow Scanning Error Entry RAP.

027-746 Job Template Pool Server Not Ready RAP

027-746 The port of the protocol specified in job template pool server settings has not started.

Procedure

Perform the steps that follow:

1. Have the customer start the port of the protocol (FTP client or SMB) specified in job template pool server settings.
2. Reload the software, GP 4.
3. If the fault persists, perform the 016A Workflow Scanning Error Entry RAP.

027-750 Fax Document Inhibited RAP

027-750 Transfer instruction when internet fax transfer is prohibited, or scan and printer document print instruction during interruption.

Procedure

Perform the steps that follow:

1. Have the customer change the transfer settings to receive internet fax.
2. Reload the software, GP 4.
3. If the fault persists, perform the 016A Workflow Scanning Error Entry RAP.

027-751 Job Template Analysis Error RAP

027-751 Instruction analysis error.

Procedure

Perform the steps that follow:

1. Have the customer re-examine the contents of the instruction.
2. If the fault persists, reload the software, GP 4.

027-752 Required User Entry Not Entered RAP

027-752 With the required user entry not entered, the instruction to start the job was given.

Procedure

Perform the steps that follow:

1. Have the customer:
   a. Not link the box to the instruction that requires user entry.
   b. Set preset values for the items in the instruction requiring user entry.
2. If the fault persists, reload the software, GP 4.

027-753 Job Flow Service Request Disabled RAP

027-753 Job is executed by instruction when the service is disabled.

Procedure

Perform the steps that follow:

1. Have the customer enable the service.
2. If the fault persists, reload the software, GP 4.

027-754 Job Flow Service File Signature Mismatch RAP

027-754 File signature settings mismatch in instruction.

Procedure

Perform the steps that follow:

1. Have the customer check the system data setting of the XDW/PDF signature and the signature setting that is specified in the instruction. If the system data setting is different from the setting in the instruction, either change the instruction or change the system data.
2. If the fault persists, reload the software, GP 4.

027-757 Extension Server SSL Fail RAP

027-757 Web application linkage during service linkage SSL access failed.

Procedure

Perform the steps that follow:

1. Have the customer:
   a. Check the server/network connection.
   b. Check the communication route that can be reached.
   c. Ping the DNS server.
   d. Check if the CA certificate of the connection destination server is imported to the device by using the browser.
   e. Check if the device does not go through the proxy that SSL has the function to check the communication details SSL.
   f. Specify the device as out of the SSL proxy target.
   g. Check if the server supports the relevant encryption method.
   h. Set the client certificate to the device.
   i. Import the client certificate to the device and set to use as the client certificate.
   j. Check the daylight saving time difference to see if the date/time of the device is correct.
2. If the fault persists, reload the software, GP 4.

027-758 System Credential Setting Error RAP

027-758 Login credential setting error at remote authentication LDAP.

Procedure

Have the customer:

1. Check whether the login name and password have been set correctly.
2. Consult with the Network Administrator to check the authentication settings at the LDAP Server.

027-759 Reference Server Connection Error RAP

027-759 Reference server connection fail at remote authentication LDAP.

Procedure

Have the customer:

1. Check whether the machines network settings are set correctly.
2. Consult with the network administrator to check the connection status from the machine to the reference server.

027-760 XJT Command Fail RAP

027-760 Incorrect command from XDOD client.

Procedure

Perform the steps that follow:

1. Have the customer:
   a. Check if the parameter setting specified in XDOD client is out of system specifications.
   b. Check the XDOD client and controller versions.
2. If the fault persists, reload the software, GP 4.

027-761 Web Print Timeout RAP

027-761 Although a web print job was received, the machine did not start printing on time.

Procedure

Have the customer:

1. If on-demand print for multiple documents was instructed using the external access function, reduce the number of documents then retry it.
2. Either extend the print on demand print duration or set it to 0.

027-762 Illegal Web Print Job Ticket RAP

027-762 Although a web print job was received, the attached job execution ticket is incorrect.

Procedure

Have the customer repeat the print instruction.

027-763 Auditron Cannot Verify User RAP

027-763 The device cannot check user info with the external accounting server.

Procedure

Have the customer:

1. Check if the external accounting server is working correctly.
2. Connect the cable correctly.
3. Set up the device so that it can correctly communicate with the external accounting server.

027-764 AirPrint Scan Data Transfer Fail RAP

027-764 The device cannot check user info with the external accounting server.

Procedure

Have the customer:

1. Check that network communication between the transfer destination AirPrint scan client and the machine is available.
2. Check whether the AirPrint scan client has enough free capacity.
3. Check the network cable connection.

027-765 Host Name Solution Error in WebDAV RAP

027-765 DNS failed to resolve the specified host name.

Procedure

Have the customer:

1. Check that the scan document destination WebDAV server is registered in DNS.
2. Check that the DNS server connection is good.
3. Check that the DNS server is correctly configured.

027-766 Proxy Name Solution Error in WebDAV RAP

027-766 DNS failed to resolve the proxy server name.

Procedure

Have the customer:

1. Check that the proxy server name that is configured on the machine is registered in DNS.
2. Check that the DNS server connection is good.
3. Check that the address of the DNS server is correctly configured.

027-767 WebDAV Server SSL Access Fail RAP

027-767 An error has occurred during the SSL/TLS connection.

Procedure

Have the customer:

1. Check the access from the PC to the scan document destination WebDAV server.
2. Check the scan document SSL settings of the destination WebDAV server.
3. Check the scan document destination WebDAV server name and server path name.

027-768 WebDAV Server Certificate Fail RAP

027-768 There is a problem with the SSL certificate of the server.

Procedure

Have the customer:

1. Check the access from the PC to the scan document destination WebDAV server.
2. Ensure the device is registered.
3. Ensure the scan SSL server certificate of the document destination WebDAV server is correct. For example:
   a. Check the expiration date.
   b. Check that the device time is correct.
   c. Check that they are not on the disposal list.
   d. Check the SSL server certificate of the certification path.
4. If the Scan document certificate to the destination WebDAV server is not registered, disable the certificate validation of the device.

027-769 WebDAV Server Access Fail RAP

027-769 WebDAV server connection error.

Procedure

Have the customer:

1. Check the network cable connection.
2. Check the access from the PC to the Scan document destination WebDAV server.
3. Ensure the correct network interface is selected.

027-770 PDL Error RAP

027-770 The DFE detected a failure in PDL during job processing.

Procedure

Perform the steps that follow:

1. Have the customer change the job conditions then try again.
2. If the fault persists, reload the software, GP 4.

027-771 DFE Disk Full RAP

027-771 The remaining HDD capacity in the DFE became less than 500Mb when printing from DFE.

Procedure

Perform the steps that follow:

1. Have the customer:
   a. Change the job parameters, then try again.
   b. Delete unnecessary files from the HDD in the DFE.
2. If the fault persists, reload the software, GP 4.

027-772, 774, 776 SMTP Server Error RAP

027-772 The SMTP server refused the HELO command (after connection to the server).

027-774 Unavailable letters were specified as a destination address (after connection to the server).

027-776 The SMTP server refused the EHLO command (after connection to the server).

Procedure

Advise the customer to use only ASCII letters for the machine host name and destination address.

027-775 Too Many SMTP Addresses RAP

027-775 The SMTP server refused the EHLO command (after connection to the server).

Procedure

Advise the customer to reduce the number of mail addresses.

027-777 SMTP Server Non Support RAP

027-777 The SMTP server does not support SMTP-AUTH (after connection to the server).

Procedure

Advise the customer to send mail without setting SMTP-AUTH.

027-778 No Mode Specified by SMTP-AUTH RAP

027-778 The mode specified by SMTP-AUTH was not found (after connection to the server).

Procedure

Advise the customer to contact the network administrator to check what SMTP authentication method the server uses.

027-779 Authentication Failure by SMTP-AUTH RAP

027-779 Authentication fail (after connecting to the server).

Procedure

Advise the customer to check if the authentication information (user name/password) has been set correctly.

027-780 WebDAV Network Interface Fail RAP

027-780 The specified network interface can not be used.

Procedure

Have the customer select the network interface that can be used.

027-781 WebDAV Spool Size Over RAP

027-781 Writing of scan data spool file failed because the disk is full.

Procedure

Have the customer split the scan data.

027-782 WebDAV Server Redirector Limit RAP

027-782 Maximum number of WebDAV server redirections has occurred.

Procedure

Have the customer check the redirection settings of the WebDAV server.

027-783 WebDAV User Authentication RAP

027-783 WebDAV server is not authenticated.

Procedure

Have the customer:

1. Check the access from the PC to the scan document destination WebDAV server.
2. Check the login user name and password.
3. Check the scan document destination WebDAV server name and server path name.

027-784 WebDAV Proxy Server Authentication RAP

027-784 WebDAV proxy server authentication failure.

Procedure

Have the customer check that the user name and password for the proxy server that was configured on the device are correct.

027-787 WebDAV File Name Dupulication Fail RAP

027-787 Override is selected in the scan file name duplication when processing.

Procedure

Have the customer set the processing of duplicated filenames at the time of scanning job execution to anything other than Stop the Job (Not Save).

027-788, 027-793 WebDAV Request Fail RAP

027-788 Bad request answered from WebDAV server.

027-793 Error number 400 from the WebDAV server has been answered.

Procedure

Have the customer:

1. Check whether access to the directory is possible.
2. Perform the operation again.

027-789, 791, 795 Access Forbidden RAP

027-789 Access forbidden reply from WebDAV server.

027-791 WebDAV server method not allowed.

027-795 WebDAV server not implemented.

Procedure

Have the customer:

1. Check the connection to the WebDAV server.
2. Check if read/write access in a file or folder in the specified place is set.
3. Check the specified file path.

027-790, 029-792 WebDAV File Not Found RAP

027-790 WebDAV server not found.

027-792 WebDAV server conflict.

Procedure

Advise the customer to ensure WebDAV storage path and directory specified in the server exist.

027-794 WebDAV Server Internal Fail RAP

027-794 WebDAV server internal error.

Procedure

Have the customer:

1. Check that the WebDAV server is up and running.
2. Check the access from the PC to the scan document destination WebDAV server.

027-796 Email Not Printed RAP

027-796 Email print control through user settings.

Procedure

Perform the steps that follow:

1. Have the customer correct the settings, then repeat the operation.
2. If the fault persists, reload the software, GP 4.

027-797 Invalid Output Destination RAP

027-797 Incorrect output destination of received mail.

Procedure

Perform the steps that follow:

1. Have the customer specify the output destination that can be processed by the device, then repeat the operation.
2. If the fault persists, reload the software, GP 4.

027-798 JFS Target Document Not Found RAP

027-798 The execution target document in the instruction set does not exist.

Procedure

Perform the steps that follow:

1. Have the customer select another document, then repeat the operation.
2. If the fault persists, reload the software, GP 4.

027-799 WebDAV Server Insufficient Storage RAP

027-799 There is no free space in the storage location on the WebDAV server.

Procedure

Advise the customer to check whether or not there is free space in the storage location.

028-910 Wrong Fuser Type RAP

028-910 The fuser needs to be replaced.

Procedure

WARNING

Ensure that the electricity to the machine is switched off while performing tasks that do not need electricity. Refer to GP 10. Disconnect the power cord. Electricity can cause death or injury. Moving parts can cause injury.

Install a new fuser, PL 7.1 Item 1.

029-700, 029-701 WebDAV Server Response RAP

029-700 Error No.500 bill from the WebDAV server has been answered.

029-701 The response from the server does not meet the specifications of the WebDAV.

Procedure

Have the customer:

1. Ensure that the WebDAV server is up and running.
2. Verify the configuration of the server.
3. Check the access from the PC to the scan document destination WebDAV server.

029-702 WebDAV Client RAP

029-702 An unexpected error has occurred in the internal library.

Procedure

Have the customer retry the same operation.

029-703 AirPrint Scan Client RAP

029-703 An error has occurred during the communication with the AirPrint scan client.

Procedure

Have the customer:

1. Check the connection of the network cable.
2. Check the transfer destination AirPrint scan client status.

029-704, 711 Invalid PACFile RAP

029-704 In WiFi mode, the contents of the proxy configuration file (PACFile) acquired by the proxy auto- detection function (WPAD) has detected that it is a fraud.

029-711 In Ethernet 1 mode, the contents of the proxy configuration file (PACFile) acquired by the proxy auto- detection function (WPAD) has detected that it is a fraud.

Procedure

Have the customer check the proxy configuration file that is stored in the HTTP server, it may be an invalid format, such as JavaScript or too large (greater than 64KB).

029-705, 706, 709, 712, 713, 716 PACFile Communications RAP

029-705 In WiFi mode, communication time-out at the time of the proxy configuration file (PACFile) acquisition occurs in a proxy auto detection function (WPAD).

029-706 In WiFi mode, the proxy configuration file (PACFile) the time of acquisition in a proxy auto-detection function (WPAD), connection error has occurred.

029-709 In WiFi mode, communication time-out of the storage destination URL of the PACFile proxy auto-detection function (WPAD).

029-712 In Ethernet 1 mode, communication time-out at the time of the proxy configuration file (PACFile) acquisition occurs in a proxy auto-detection function (WPAD).

029-713 In Ethernet 1 mode, the proxy configuration file (PACFile) the time of acquisition in a proxy auto-detection function (WPAD), connection error has occurred.

029-716 In Ethernet 1 mode, communication time-out of the storage destination URL of the PACFile proxy auto-detection function (WPAD).

Procedure

Have the customer:

1. Check the connection of the network cable.
2. Check the default gateway configuration.
3. Verify the subnet mask setting.
4. Check the DNS server address setting.

029-707, 029-708, 714, 715 PACFile Not Found RAP

029-707 In WiFi mode, failed to find the proxy settings file (PACFile) in the proxy automatic detection function (WPAD).

029-708 In WiFi mode, incorrect format of the storage destination URL of PACFile acquired by the proxy auto- detection function (WPAD).

029-714 In Ethernet 1 mode, failed to find the proxy settings file (PACFile) in the proxy automatic detection function (WPAD).

029-715 In Ethernet 1 mode, incorrect format of the storage destination URL of PACFile acquired by the proxy auto- detection function (WPAD).

Procedure

Have the customer:

1. Check the URL setting of PACFile storage destination server.
2. Check the URL information PACFile set in the DHCP server is correct (if the proxy server acquisition method is WPAD).
3. If the URL is correct, check that the PACFile to the HTTP server has been registered.

029-710, 0129-717 PACFile URL Not Found RAP

029-710 In WiFi mode, failed to locate the storage destination URL of PACFile the proxy auto-detection function (WPAD).

029-717 In Ethernet 1 mode, failed to locate the storage destination URL of PACFile the proxy auto-detection function (WPAD).

Procedure

Have the customer check whether the URL information of the PACFile in the DHCP server is correctly registered.

033-310 Fax Charge Function Fail RAP

033-310 The fax send billing function was turned on although multiple lines are installed.

Procedure

Have the customer switch off the fax send billing function or change to a single-line installation.

033-311 Invalid Address Book Data RAP

033-311 The registered contents in the address book are invalid.

Procedure

Perform dC301 NVM initialization.

033-312, 033-313, 033-315 to 033-327 Fax Fault RAP

033-312 The fax PWB was unable to detect the power off at the ESS PWB side within the specified time.

033-313 After the initialization of fax card has completed, it was detected that communication cannot be established with the fax card.

033-315 USB fax class driver notifies that a fatal error has occurred.

033-316 An error has occurred at the device cont section in fax controller.

033-317 An error has occurred at the fax device section in fax controller.

033-318 A fatal error has occurred at the fax image processing.

033-319 Due to an error during fax cont 2 software processing, subsequent processes cannot be performed.

033-320 The system side did not respond within the specified time on booting.

033-321 The fax card did not respond within the specified time on booting.

033-322 An I/F timeout with the fax.

033-323 An error was detected in fax cont 2.

033-324 The USB has transitioned to an unexpected state.

033-325 A fatal error has occurred at the fax card.

033-326 The fax card has detected a fatal error.

033-327 During fax communication, the FCM stopped responding and even though a communication interrupt request was issued to the FCM, it remained unresponsive.

Procedure

WARNING

Ensure that the electricity to the machine is switched off while performing tasks that do not need electricity. Refer to GP 10. Disconnect the power cord. Electricity can cause death or injury. Moving parts can cause injury.

Perform the steps that follow:

1. Switch the machine off, then on, GP 10.
2. Check that the telephone cables and network cable are securely connected.
3. Ensure that the fax PWB, PL 18.1B Item 15 is installed correctly.
4. Refer to Wiring Diagram 1. Check the connections and wiring between the ESS PWB, PL 18.1B Item 5 and the fax PWB, PL 18.1B Item 15 for an open circuit, short circuit or poor contact.
5. Reload the software, GP 4.
6. Check that the customer fax line is operational. Plug a phone into the fax line. Check for a dial tone. If the fax line has a fault, inform the customer to have the fax line checked by the telephone company.
7. If the fault persists, install new components as necessary:
   - Fax PWB, PL 18.1B Item 15.
   - ESS PWB, PL 18.1B Item 5.

033-314 Controller and Fax Card ROM Mismatch RAP

033-314 The controller detected software version mismatch.

Procedure

Perform the steps that follow:

1. Switch the machine off, then on, GP 10.
2. If the fault persists, reload the software, GP 4.

033-328, 329, 340 Failed to Initialize Fax Log RAP

033-328 The initialization of communication log library has failed.

033-329 A fax cont error was detected.

033-340 The Pflite communication log write function returned an error.

Procedure

Perform the steps that follow:

1. Perform dC301 NVM Initialization.
2. If the fault persists, perform the 033-312, 033-313, 033-315 to 033-327 Fax Fault RAP.

033-330 to 033-335 FoIP Error RAP

033-330 A fatal software error has occurred within the FoIP

033-331 The initialization process with the FoIP controller has failed.

033-332 The FoIP controller did not respond within the specified time on booting.

033-333 The FoIP controller did not respond within the specified time after entering sleep mode.

033-334 Unable to send messages to the FoIP controller.

033-335 A fault notification due to invalid fault code was received from the fax card or FoIP.

Procedure

Perform the 033-312, 033-313, 033-315 to 033-327 Fax Fault RAP.

033-336 Non-mounted Channel RAP

033-336 A message meant for a channel that is not installed was received.

Procedure

Perform the 033-312, 033-313, 033-315 to 033-327 Fax Fault RAP.

033-339 Fax 2 Not Responding RAP

033-339 When transitioning to sleep, there is no response from fax controller 2.

Procedure

Switch the machine off, then on, GP 10.

033-363 Fax Card Reset (Reboot) RAP

033-363 The controller reset the fax card because the fax card did not respond.

Procedure

Perform the 033-312, 033-313, 033-315 to 033-327 Fax Fault RAP.

033-500 to 033-507 Remote Machine Error RAP

033-500 Modem CS operation error.

033-501 The number of receive line is 0.

033-502 There was no response for up to the 3rd post message.

033-503 T1 timeout has occurred.

033-504 T2 timeout has occurred.

033-505 T5 timeout has occurred.

033-506 DCN received.

033-507 No receiving capability in the remote machine.

Procedure

Perform the steps that follow:

1. Have the customer check the status of the remote machine, If the remote machine is good, repeat the operation.
2. If the fault persists, perform the 033-312, 033-313, 033-315 to 033-327 Fax Fault RAP.

033-508, 033-511 Destination Polling Error RAP

033-508 No polling document in the remote machine.

033-511 DTS/NSC resending exceeded the limit.

Procedure

Perform the steps that follow:

1. Have the customer check the destination device for a problem, for example a document jam or mismatched password or request a polling document to prepared. Then repeat the operation.
2. If the fault persists, perform the 033-312, 033-313, 033-315 to 033-327 Fax Fault RAP.

033-509 DCS/NSS Resend Exceeded RAP

033-509 DCS/NSS re-send over.

Procedure

Perform the steps that follow:

1. Have the customer repeat the operation. If the problem persists after repeating the operation, check the status of the receiver at the destination side.
2. If the fault persists, perform the 033-312, 033-313, 033-315 to 033-327 Fax Fault RAP.

033-510 Fallback Error RAP

033-510 FTT was received at 2400 bps.

Procedure

Perform the 033-312, 033-313, 033-315 to 033-327 Fax Fault RAP.

033-512, 513, 518, 519, 520, 534 Remote Machine Function RAP

033-512 The remote machine did not support relay broadcast.

033-513 The remote machine does not have the mailbox function.

033-518 No SUB receive function in the receiver.

033-519 No SEP receive function in the receiver.

033-520 No PWD/SID receive function in the receiver.

033-534 No remote collate copy function in the remote machine.

Procedure

Perform the steps that follow:

1. Have the customer check if the remote machine has the relevant function.
2. If the fault persists, perform the 033-312, 033-313, 033-315 to 033-327 Fax Fault RAP.

033-514, 516, 517, 521, 522, 033-526 to 033-529 Remote Machine Error 1 RAP

033-514 Carrier broken.

033-516 EOR-Q was received.

033-517 Timeout has occurred between the ECM frames.

033-521 The system sent a reject command signal and stopped the transmission.

033-522 DTMF I/F timed out. Correct operation was not performed within the specified time.

033-526 An ECM error has occurred.

033-527 EOR-Q was sent.

033-528 RTN was sent.

033-529 RTN was received.

Procedure

Perform the steps that follow:

1. Have the customer request for the sender to check the remote machine for an error, then re-send.
2. If the fault persists, perform the 033-312, 033-313, 033-315 to 033-327 Fax Fault RAP.

033-523, 524, 525, 542, 546, 574 Line Not Connected RAP

033-523 Channel 1 not connected.

033-524 Channel 2 not connected.

033-525 Channel 3 not connected.

033-542 The process was requested for uninstalled channel.

033-546 The dial tone could not be detected.

033-574 An instruction was issued to a channel that is not installed.

Procedure

Perform the steps that follow:

1. Ensure the relevant telephone cable is connected correctly.
2. If the fault persists, perform the 033-312, 033-313, 033-315 to 033-327 Fax Fault RAP.

033-530 DTMF Illegal Procedure RAP

033-530 An invalid procedure signal was received.

Procedure

Perform the steps that follow:

1. Advise the customer that there may be a mistake in how the operator is performing the DTMF procedure.
2. If the fault persists, perform the 033-312, 033-313, 033-315 to 033-327 Fax Fault RAP.

033-531, 532, 533, 544, 552, 578 Remote Machine Error 2 RAP

033-531 A reject command signal was received.

033-532 An illegal command was received.

033-533 An error has occurred at the T.30 protocol.

033-544 Busy tone was detected.

033-552 When receiving G3 image data, the detected total number of error lines exceeded the threshold value indicated in the system data.

033-578 The frame size of received command exceeded the specification value.

Procedure

Perform the steps that follow:

1. Have the customer request for the sender to check the remote machine for an error, then re-send.
2. If the fault persists, perform the 033-312, 033-313, 033-315 to 033-327 Fax Fault RAP.

033-535 DCN Receive at Phase B Send RAP

033-535 Phase B instruction command (DCS/NSS/NSC/DTC) was rejected at the DCN.

Procedure

Perform the steps that follow:

1. Have the customer check the recipient's address, folder information, etc. then repeat the operation.
2. If the fault persists, perform the 033-312, 033-313, 033-315 to 033-327 Fax Fault RAP.

033-536 to 033-540, 568, 575, 577 Send/Receive Error RAP

033-536 The ringing stops before the resource was released.

033-537 A conflict between outgoing and incoming calls has occurred and the sending was cancelled.

033-538 During the image processing of fax send, an error has occurred in the fax card.

033-539 During the image processing of fax receive, an error has occurred in the fax card.

033-540 During the image processing for fax print format, an error has occurred.

033-568 During fax communication, there was no response from the FCM for the specified time.

033-575 Polarity inversion was detected.

033-577 An underrun has occurred at the modem.

Procedure

Perform the steps that follow:

1. Have the customer repeat the operation.
2. If the fault persists, perform the 033-312, 033-313, 033-315 to 033-327 Fax Fault RAP.

033-541, 033-566 No Destination Specified RAP

033-541 The Fax Card is not able to call because there is no dial.

033-566 The fax card is unable to call because there is no dial.

Procedure

Perform the steps that follow:

1. Have the customer specify the appropriate address by using the speed dial number that is registered with the correct fax address number, etc.
2. If the fault persists, perform the 033-312, 033-313, 033-315 to 033-327 Fax Fault RAP.

033-543, 567, 576, 702, 703 Dial Error RAP

033-543 There is incorrect (illegal) data in the dial data.

033-567 There is incorrect (illegal) data in the dial data.

033-576 The dial data is invalid.

033-702 Digits of the indicated dial data exceeds the number of allowed number of digits.

033-703 The indicated dial data digits exceed the number of allowed digits.

Procedure

Perform the steps that follow:

1. Have the customer check the dial data, then repeat the operation.
2. If the fault persists, perform the 033-312, 033-313, 033-315 to 033-327 Fax Fault RAP.

033-545 T0 Timeout RAP

033-545 The remote machine might not be a facsimile, or it is not in the facsimile mode.

Procedure

Perform the steps that follow:

1. Have the customer check the address number and whether the remote party is a fax machine.
2. If the fault persists, perform the 033-312, 033-313, 033-315 to 033-327 Fax Fault RAP.

033-547 Abort During Transmission RAP

033-547 Aborted during transmission (operation was cancelled).

Procedure

For information only. No service action necessary.

033-548 No Manual Send Line RAP

033-548 There are no lines for manual transmission.

Procedure

Perform the steps that follow:

1. Use a phone to establish communications, then have the customer repeat the operation.
2. If the fault persists, perform the 033-312, 033-313, 033-315 to 033-327 Fax Fault RAP.

033-549, 551, 583 Fax Service Disabled RAP

033-549 The system cannot receive the service because it was prohibited to do the operation.

033-551 When a phone or fax communication was about to end, an operation was performed on that job.

033-583 The request received a connection refused response because the target connection is temporarily out of resource.

Procedure

Perform the steps that follow:

1. Have the customer wait for a while, then repeat the operation.
2. If the fault persists, perform the 033-312, 033-313, 033-315 to 033-327 Fax Fault RAP.

033-550 Cannot Disable Fax Service RAP

033-550 The system is attempting to transition to the diag mode, etc., but was unable to do so because fax communication is in progress.

Procedure

Perform the steps that follow:

1. Have the customer wait for the job to complete its transmission, then repeat the operation.
2. If the fault persists, perform the 033-312, 033-313, 033-315 to 033-327 Fax Fault RAP.

033-553 No Folder/Relay RAP

033-553 The F code that was sent from the remote machine is instructing a function that does not exist in the local machine.

Procedure

Perform the steps that follow:

1. Have the customer consult with the operator of the remote machine on whether the wrong F Code was input.
2. If the fault persists, perform the 033-312, 033-313, 033-315 to 033-327 Fax Fault RAP.

033-554 Wrong Password/Receive Banned RAP

033-554 Data received without a password/a mismatch of passwords, or a mismatch of the select receive number. Mismatch of password or communication from the user other than those who are in the select receive list.

Procedure

Perform the steps that follow:

1. For a single occurrence, take no action.
2. If the fault persists, perform the 033-312, 033-313, 033-315 to 033-327 Fax Fault RAP.

033-555, 033-556 Incorrect Password RAP

033-555 The machine password of local machine does not match the one that was sent from the remote machine.

033-556 The remote ID was not sent from the remote machine. The sending password and the remote ID do not match.

Procedure

Perform the steps that follow:

1. Have the customer consult with the operator of the remote machine on whether the wrong machine password was input.
2. If the fault persists, perform the 033-312, 033-313, 033-315 to 033-327 Fax Fault RAP.

033-557, 033-565 Destinations or Services Exceeded RAP

033-557 The total number of requested services or total number of addresses exceeded the number defined by the specifications.

033-565 The total number of requested addresses exceeded the number defined by the specifications.

Procedure

Perform the steps that follow:

1. Have the customer wait for the jobs that are waiting to be sent to decrease or reduce the number of addresses, then try again.
2. If the fault persists, perform the 033-312, 033-313, 033-315 to 033-327 Fax Fault RAP.

033-558, 033-559 Remote ID Rejection RAP

033-558 The remote ID of the remote terminal is registered in the blacklist of the local machine.

033-559 The remote ID was not sent from the remote terminal.

Procedure

Perform the steps that follow:

1. Have the customer change the fax machine setting to be able to receive fax messages even if destination does not send remote ID.
2. If the fault persists, perform the 033-312, 033-313, 033-315 to 033-327 Fax Fault RAP.

033-560, 561, 562 TRESS/RCC RAP

033-560 For TRESS and RCC, the authentication ID that was sent from the remote terminal was invalid.

033-561 TRESS and RCC cannot be performed as the operation is prohibited or a Job is in progress.

033-562 RCC execution was put on hold as it is in the operation prohibited mode.

Procedure

Perform the steps that follow:

1. For a single occurrence, take no action.
2. If the fault persists, perform the 033-312, 033-313, 033-315 to 033-327 Fax Fault RAP.

033-563, 033-569 No Printable Paper Size RAP

033-563 When formatting, registered paper that is not applicable to the document size to be printed was loaded.

033-569 The paper tray status is such that paper with orientation that can be output can only be supplied from the SMH.

Procedure

Perform the steps that follow:

1. Have the customer specify the correct paper size and check that the paper trays are correctly loaded with the paper guides correctly adjusted.
2. If the fault persists, perform the 033-312, 033-313, 033-315 to 033-327 Fax Fault RAP.

033-564, 033-570 Power Off During Transmission RAP

033-564 An error due to power off during transmission. The power switch was turned off, or the system was reset.

033-570 An error due to power off during transmission. the power switch was turned off, or the system was reset.

Procedure

Perform the steps that follow:

1. Have the customer:
   a. Wait for a while then check the fax function settings and dial numbers, then resend data if needed.
   b. Check the self-terminal status and line status, then perform the operation again.
2. If the fault persists, perform the 033-312, 033-313, 033-315 to 033-327 Fax Fault RAP.

033-571, 033-588 Manual Send Job Cancelled RAP

033-571 At the start of the Job, the report area for fax was detected to be full and the job was cancelled.

033-588 T38 packet loss causing unrecoverable error was detected.

Procedure

Perform the steps that follow:

1. Have the customer wait for some of the jobs that are queued to be completed or cancelled, then retry the operation.
2. If the fault persists, perform the 033-312, 033-313, 033-315 to 033-327 Fax Fault RAP.

033-572 Fax Report Print Job Cancelled RAP

033-572 At the start of the job, job full was detected, only the fax report document is stored, and the printing of fax report was cancelled.

Procedure

Perform the steps that follow:

1. For a single occurrence, take no action.
2. If the fault persists, perform the 033-312, 033-313, 033-315 to 033-327 Fax Fault RAP.

033-573 Domain Regulation Check Error RAP

033-573 The address was specified with a prohibited domain.

Procedure

Perform the steps that follow:

1. Have the customer check the address and input the correct one.
2. If the fault persists, perform the 033-312, 033-313, 033-315 to 033-327 Fax Fault RAP.

033-580 Missing VoIP Gateway RAP

033-580 There is no existing VoIP gateway that correspond to the phone number that was input.

Procedure

Perform the steps that follow:

1. Have the customer set the correct device VoIP gateway address to correspond with the phone number that was input.
2. If the fault persists, perform the 033-312, 033-313, 033-315 to 033-327 Fax Fault RAP.

033-581 Access Authentication Failure RAP

033-581 The request was asked for authentication and it failed the authentication.

Procedure

Perform the steps that follow:

1. Have the customer check the proxy server authentication user name, authentication password, and sip server settings at the machine.
2. If the fault persists, perform the 033-312, 033-313, 033-315 to 033-327 Fax Fault RAP.

033-582 Mismatched Ability RAP

033-582 The request received a connection refused response because the target connection has mismatched capability data.

Procedure

Perform the steps that follow:

1. Have the customer check the device at the recipient side. If the recipient side is guaranteed to be a supported machine, check the sip server settings between the recipient side and the machine.
2. If the fault persists, perform the 033-312, 033-313, 033-315 to 033-327 Fax Fault RAP.

033-584 SIP Request Timeout RAP

033-584 SIP communication timeout has occurred.

Procedure

Perform the steps that follow:

1. Have the customer:
   a. Check whether the correct address or phone number was input.
   b. Check whether the network cable is connected.
   c. Check whether the SIP server is running.
   d. Check the connection status of the network cable between the machine and the SIP server, as well as between the machine and the recipient side.
   e. Check whether the SIP server and the recipient side are able to communicate.
2. If the fault persists, perform the 033-312, 033-313, 033-315 to 033-327 Fax Fault RAP.

033-585 SIP Request Error RAP

033-585 Other error has occurred during SIP communication.

Procedure

Perform the 033-312, 033-313, 033-315 to 033-327 Fax Fault RAP.

033-586 T38 Protocol Not Ready RAP

033-586 Unable to communicate as the IP address is unresolved. Unable to communicate as the registration to registrar server was not completed when using a SIP server.

Procedure

Perform the steps that follow:

1. Have the customer:
   a. Wait for a while, then try to send again.
   b. Make it so that the IP address can be obtained and registered to the registrar server.
2. If the fault persists, perform the 033-312, 033-313, 033-315 to 033-327 Fax Fault RAP.

033-587, 589, 590, 592 Remote Machine Error 3 RAP

033-587 Unable to establish T38 session (including RTP session).

033-589 The received T38 protocol data contains invalid content (including ASN.1 decode error).

033-590 Unable to continue the job as an error has occurred at the packet send (TCP, UDP, RTP) of T38 protocol.

033-592 A timeout caused by other than timeout notification (image data receive timeout and FoIP internal timeout) has occurred.

Procedure

Perform the steps that follow:

1. Have the customer request for the sender to check the remote machine for an error, then re-send.
2. If the fault persists, perform the 033-312, 033-313, 033-315 to 033-327 Fax Fault RAP.

033-591 FoIP Max Sessions Over RAP

033-591 A new send request was initiated when the system is already communicating using the maximum number of sessions for FoIP.

Procedure

Perform the steps that follow:

1. Wait for the IP fax send that is in progress to complete, then try to send again.
2. If the fault persists, perform the 033-312, 033-313, 033-315 to 033-327 Fax Fault RAP.

033-593 Cancelled By Remote Peer RAP

033-593 An interrupt process was performed at the communication partner side.

Procedure

Perform the steps that follow:

1. Have the customer request for the sender to re-send.
2. If the fault persists, perform the 033-312, 033-313, 033-315 to 033-327 Fax Fault RAP.

033-700 T1 Timeout Fail RAP

033-700 T1 timeout has occurred when sending or at phase B and later when receiving.

Procedure

Perform the steps that follow:

1. Have the customer:
   a. Repeat the operation if the fault occurs while sending.
   b. Request for the sender to re-send if the fault occurs when receiving.
   c. Check the remote machine for an error.
2. If the fault persists, perform the 033-312, 033-313, 033-315 to 033-327 Fax Fault RAP.

033-701 Retry Timeout RAP

033-701 The communication did not end normally within the retry timeout time.

Procedure

Perform the 033-312, 033-313, 033-315 to 033-327 Fax Fault RAP.

033-710, 712, 713, 717, 718, 719, 721 Document Not Found RAP

033-710 The specified document cannot be found

033-712 Invalid document, host memory full

033-713 Incorrect chain-link number.

033-717 The verification result of the specified password was NG.

033-718 The document was not found in the polling sending box or the specified folder.

033-719 The document was not found in the polling sending box or the specified folder.

033-721 The specified page cannot be generated.

Procedure

Perform the steps that follow:

1. Have the customer repeat the operation.
2. If the fault persists, perform the 033-312, 033-313, 033-315 to 033-327 Fax Fault RAP.

033-716 No Specified Folder RAP

033-716 The status in which the job cannot be performed was detected during EP-TRESS operation.

Procedure

Perform the steps that follow:

1. For a single occurrence, take no action.
2. If the fault persists, perform the 033-312, 033-313, 033-315 to 033-327 Fax Fault RAP.

033-724 Fax Receive Memory Over Flow RAP

033-724 Receive operation was aborted because the maximum limit of the image data amount that can be received for one Fax communication was exceeded.

Procedure

Perform the steps that follow:

1. Inform the customer that the optional hard disk is required.
2. If the fault persists, perform the 033-312, 033-313, 033-315 to 033-327Fax Fault RAP.

033-725, 033-742 Insufficient Hard Disk Space RAP

033-725 The HD was full when fax was received, or when the format or report was created.

033-742 Timed out by page read close instruction (ran out of memory during manual send).

Procedure

Have the customer delete unnecessary data from the hard disk.

Procedure

Perform the steps that follow:

1. Have the customer delete unnecessary data from the hard disk.
2. If the fault persists, perform the 033-312, 033-313, 033-315 to 033-327 Fax Fault RAP.

033-726, 728, 734, 737, 738, 751 Fax Printing Error RAP

033-726 Two sided printing not available when receiving fax (mixed size).

033-728 Formatting for fax auto print was aborted because the instruction for fax manual print was sent during the operation.

033-734 Job was cancelled because fax print and fax auto report were started at the same time.

033-737 The fax cont detected a failure and could not continue processing the job.

033-738 The fax cont detected an error in JBIG data during coding/decoding of the JBIG data.

033-751 An activity report is generated during the time period where print is prohibited and since the machine is in sleep mode, it started the process to place the report on hold.

Procedure

Perform the steps that follow:

1. For a single occurrence, take no action.
2. If the fault persists, perform the 033-312, 033-313, 033-315 to 033-327 Fax Fault RAP.

033-731, 732, 736, 740, 747, 749 Inconsistent Instructions RAP

033-731 Transmission closed due to start transmission from fax card and stop transmission from controller.

033-732 Print job received was cancelled at forced polling.

033-736 The data amount for fax transfer exceeded the threshold during fax transfer of internet fax off ramp.

033-740 The user cancelled immediate printing upon receiving.

033-747 When requesting to start the service from the fax card, the job could not be generated due to causes such as job number overflow.

033-749 During fax formatting, the extended image data is larger than the memory reserved.

Procedure

For information only. No service action necessary.

033-733, 735, 741, 743, 744, 745, 746, 750 Fax Document Number Error RAP

033-733 The number of job documents related to the job could not be obtained.

033-735 Fax receive - buffer allocate timeout.

033-741 When transferring image data to the fax card, the conditions for sending the response to the fax card did not match.

033-743 When receiving image data from the fax card, the conditions for sending the response to the fax card did not match.

033-744 When receiving image data from the fax card, the conditions for sending the response to the fax card did not match.

033-745 When receiving image data from the fax card, the conditions for sending the response to the fax card did not match.

033-746 When transferring image data to the fax card, the conditions for sending the response to the fax card did not match.

033-750 During formatting, when image data was retrieved from the fax card, even though the image data was determined to be free from error, extension failed.

Procedure

Perform the steps that follow:

1. Have the customer repeat the operation.
2. If the fault persists, perform the 033-312, 033-313, 033-315 to 033-327 Fax Fault RAP.

041-310 IM Logic Fail RAP

041-310 IM software control error detected.

Procedure

WARNING

Ensure that the electricity to the machine is switched off while performing tasks that do not need electricity. Refer to GP 10. Disconnect the power cord. Electricity can cause death or injury. Moving parts can cause injury.

Perform the steps that follow:

1. Switch the machine off, then on, GP 10.
2. Ensure that all connectors on the ESS PWB, PL 18.1A Item 5 (B400) or PL 18.1B Item 5 (B405) and the MCU PWB, PL 18.2 Item 2 are securely connected. Ensure all surface mounted modules on the ESS PWB and MCU PWB are securely connected.
3. Reload the software, GP 4.
4. If the fault persists, install new components as necessary:
   - ESS PWB, PL 18.1A Item 5 (B400)
   - ESS PWB, PL 18.1B Item 5 (B405)
   - MCU PWB, PL 18.2 Item 2.

041-340 MCU NVM (EEPROM) Fail RAP

041-340 NVM (EEPROM) data abnormality.

Initial Actions

WARNING

Ensure that the electricity to the machine is switched off while performing tasks that do not need electricity. Refer to GP 10. Disconnect the power cord. Electricity can cause death or injury. Moving parts can cause injury.

Fault code 041-340 Only. Check that the NVM values that follow are set to default:

- 740-016 Range Over Chain No
- 740-017 Range Over Link No
- 740-018 Range Over Chain Link
- 740-019 Range Over Value
- 740-020 Write in Progress Range Over Chain No
- 740-021 Write in Progress Range Over Link No

Procedure

Perform the steps that follow:

1. Switch the machine off, then on, GP 10.
2. Ensure that all connectors on the ESS PWB, PL 18.1A Item 5 (B400) or PL 18.1B Item 5 (B405) and the MCU PWB, PL 18.2 Item 2 are securely connected. Ensure all surface mounted modules on the ESS PWB and MCU PWB are securely connected.
3. Reload the software, GP 4.
4. dC301 NVM Initialization.
5. If the fault persists, install new components as necessary:
   - ESS PWB, PL 18.1A Item 5 (B400)
   - ESS PWB, PL 18.1B Item 5 (B405)
   - MCU PWB, PL 18.2 Item 2.

042-348 Drive Over Temperature Detect Fail RAP

042-348 Drive over temperature was detected.

Procedure

WARNING

Ensure that the electricity to the machine is switched off while performing tasks that do not need electricity. Refer to GP 10. Disconnect the power cord. Electricity can cause death or injury. Moving parts can cause injury.

Refer to the procedure that follows as necessary:

- GP 6 How to Check a Motor.

Enter dC330 code 042-001 to run the rear fan. **The rear fan runs.**

Y N

Refer to Wiring Diagram 9. Check the items that follow:

- The wiring between the rear fan and the LVPS for open circuit, short circuit or poor contact.
- Load towards the rear fan.

Install new components as necessary:

- Rear fan, PL 19.3A Item 9 (B400) or PL 19.3B Item 9 (B405).
- LVPS, PL 18.1A Item 10 (B400) or PL 18.1B Item 10 (B405).

Enter dC330 code 042-003 to run the LVPS fan. **The LVPS fan runs.**

Y N

Refer to Wiring Diagram 4 (B405) or Wiring Diagram 5 (B400). Check the items that follow:

- The wiring between the LVPS fan and the LVPS for open circuit, short circuit or poor contact.
- Load towards the rear fan.

Install new components as necessary:

- LVPS fan, PL 4.1A Item 13 (B400) or PL 4.1B Item 14 (B405).
- LVPS, PL 18.1A Item 10 (B400) or PL 18.1B Item 10 (B405).

The fault may be intermittent. Perform the steps that follow:

- Refer to Wiring Diagram 9. Check The wiring between the rear fan and the LVPS for open circuit, short circuit or poor contact.
- Refer to Wiring Diagram 4 (B405) or Wiring Diagram 5 (B400). Check the wiring between the LVPS fan and the LVPS for open circuit, short circuit or poor contact.

Install new components as necessary:

- Rear fan, PL 19.3A Item 9 (B400) or PL 19.3B Item 9 (B405).
- LVPS fan, PL 4.1A Item 13 (B400) or PL 4.1B Item 14 (B405).
- LVPS, PL 18.1A Item 10 (B400) or PL 18.1B Item 10 (B405).

042-398 LVPS Fan Fail RAP

042-398 A fault was detected in LVPS fan.

Procedure

Perform the steps that follow:

1. Switch Off, then switch on the machine, GP 10.
2. Check the LVPS fan harness is connected at the left cover. Repair any damaged connectors or wire.
3. If the fault persists, install a new LVPS Fan PL 4.1A Item 1 (B400) or PL 4.1B Item 1 (B405).

045-310 Image Ready RAP

045-310 Controller image preparation failure detected.

Procedure

1. Switch the machine off, then on, GP 10.
2. Reload the software, GP 4.

045-311 Controller Communication Fail RAP

045-311 Communication failure between ESS PWB and MCU PWB was detected.

Procedure

WARNING

Ensure that the electricity to the machine is switched off while performing tasks that do not need electricity. Refer to GP 10. Disconnect the power cord. Electricity can cause death or injury. Moving parts can cause injury.

Perform the steps that follow:

1. Switch the machine off, then on, GP 10.
2. Ensure that all connectors on the ESS PWB, PL 18.1A Item 5 (B400) or PL 18.1B Item 5 (B405) and the MCU PWB, PL 18.2 Item 2 are securely connected. Ensure all surface mounted modules on the ESS PWB and MCU PWB are securely connected.
3. If the fault persists, install new components as necessary:
   - ESS PWB, PL 18.1A Item 5 (B400)
   - ESS PWB, PL 18.1B Item 5 (B405)
   - MCU PWB, PL 18.2 Item 2.

050-596 Jam Zone IOT 3 RAP

050-596 Paper Jam occurred in Jam zone IOT 3.

Procedure

Perform the steps that follow:

1. Open the bypass tray, Tray 1, and Tray 2.
2. Open the rear cover and remove the jammed paper.
3. Close the bypass tray, Tray 1, Tray 2, and the rear cover, PL 19.2A Item 10.

058-315 to 058-316, 059-314 to 059-315, 059-324, 059-326 Fuser Checkout RAP

058-315 Fuser heat roll STS Sensor fail detected.

058-316 Low fuser heat roll temperature detected.

059-314 Centre STS Sensor disconnect detected.

059-315 Over Temperature of Fuser heat roll detected.

059-324 Abnormal Fuser heat roll temperature detected.

059-326 The system detected an open circuit of the heat roll thermistor.

Initial Actions

WARNING

Ensure that the electricity to the machine is switched off while performing tasks that do not need electricity. Refer to GP 10. Disconnect the power cord. Electricity can cause death or injury. Moving parts can cause injury.

- Remove the fuser. Check the heat roll for paper or foreign substances.
- **(Fault code 058-310 only)** Check that the initial temperature is not set to high in NVM, dC131.

Procedure

Perform the steps that follow:

1. Switch off, then switch on the machine, GP 10.
2. Ensure that the fuser is installed correctly and is the correct voltage for the region.
3. Check the connections and wiring between the fuser, PL 7.1 Item 1, and the MCU PWB, PL 18.2 Item 2, for open circuit, short circuit or poor contact.
4. Check the connections and wiring between the fuser, PL 7.1 Item 1, and the LVPS, PL 18.1A Item 10 (B400) or PL 18.1B Item 10 (B405), for open circuit, short circuit or poor contact.
5. Check the connections and wiring between the MCU PWB, PL 18.2 Item 2, and the LVPS, PL 18.1A Item 10 (B400) or PL 18.1B Item 10 (B405), for open circuit, short circuit or poor contact.
6. Check the FSR harness assembly, PL 18.3A Item 9 (B400) or PL 18.3B Item 9 (B405), and the LV harness assembly PL 18.3A Item 5 (B400) or PL 18.3B Item 5 (B405), for damage.
7. If the fault persists, install new components as necessary:
   - Fuser, PL 7.1 Item 1.
   - LVPS, PL 18.1A Item 10 (B400) or PL 18.1B Item 10 (B405).
   - MCU PWB, PL 18.2 Item 2.
   - FSR harness assembly, PL 18.3A Item 9 (B400) or PL 18.3B Item 9 (B405).
   - LV harness assembly PL 18.3A Item 5 (B400) or PL 18.3B Item 5 (B405).

062-311, 062-313 to 062-314, 062-318 IIT Software Logic Fail RAP

062-311 Error detected in IISS software.

062-313 Inexecutable software parameters detected.

062-314 Inexecutable software parameters detected.

062-318 Scan setting was not performed in time during page gap.

Procedure

WARNING

Ensure that the electricity to the machine is switched off while performing tasks that do not need electricity. Refer to GP 10. Disconnect the power cord. Electricity can cause death or injury. Moving parts can cause injury.

1. Switch off, then switch on the machine, GP 10.
2. Upgrade the software, GP 4.
3. Perform GP 25, Function 03. NVRAM INIT MODE.

CAUTION

When installing a new ESS PWB and a new MCU PWB at the same time, first install the new ESS PWB, by following REP 18.1 (B405), REP 18.2 (B400). If the new ESS PWB installation is successful, switch off the machine, GP 10. Then, install the new MCU PWB.

4. For 062-311 and 062-313 only, if the fault persists, install a new:
   - ESS PWB, PL 18.1A Item 5 (B400) or PL 18.1B Item 5 (B405).
   - MCU PWB, PL 18.2 Item 2.

   NOTE: *If the fault persists after startup, perform dC132 to verify all numbers match. Go to Serial Number Re-Synchronization in GSN (Library 1503)*

062-345 IIT EEPROM Fail RAP

062-345 Write failure to IEEPROM, or communication failure with EEPROM.

Procedure

WARNING

Ensure that the electricity to the machine is switched off while performing tasks that do not need electricity. Refer to GP 10. Disconnect the power cord. Electricity can cause death or injury. Moving parts can cause injury.

1. Switch off, then switch on the machine, GP 10.
2. Ensure the EMMC Card, PL 18.1A Item 6 (B400) / PL 18.1B Item 6 (B405), is connected securely to the ESS PWB, PL 18.1A Item 5 (B400) / PL 18.1B Item 5 (B405).
3. Perform GP 25, Function 03. NVRAM INIT MODE.

CAUTION

When installing a new ESS PWB and a new MCU PWB at the same time, first install the new ESS PWB, by following REP 18.1 (B405), REP 18.2 (B400). If the new ESS PWB installation is successful, switch off the machine, GP 10. Then, install the new MCU PWB.

4. If the fault persists, install a new:
   - ESS PWB, PL 18.1A Item 5 (B400) or PL 18.1B Item 5 (B405).
   - MCU PWB, PL 18.2 Item 2.

   NOTE: *If the fault persists after startup, perform dC132 to verify all numbers match. Go to Serial Number Re-Synchronization in GSN (Library 1503).*

062-360, 062-389 Carriage Position Fail RAP

062-360 Any of the faults that follow was detected:

- An error with the count value of the carriage position control.
- No IIT registration sensor input during carriage initialization.
- Abnormality in detected position of IIT registration sensor.

062-389 A Carriage overrun was detected.

Procedure

WARNING

Ensure that the electricity to the machine is switched off while performing tasks that do not need electricity. Refer to GP 10. Disconnect the power cord. Electricity can cause death or injury. Moving parts can cause injury.

1. Switch off, then switch on the machine, GP 10.
2. Clean the document glass and the white strip, GP 24.
3. Check the connections and wiring between the ESS PWB (P/J451, P/J452, P/J453), and the IIT assembly PL 21.1 Item 14, for an open circuit, short circuit, or poor contact.
4. Perform GP 25, Function 03. NVRAM INIT MODE.

CAUTION

When installing a new ESS PWB and a new MCU PWB at the same time, first install the new ESS PWB, by following REP 18.1 (B405), REP 18.2 (B400). If the new ESS PWB installation is successful, switch off the machine, GP 10. Then, install the new MCU PWB.

5. If the fault persists, install new components as necessary:
   - ESS PWB, PL 18.1A Item 5 (B400) or PL 18.1B Item 5 (B405).
   - MCU PWB, PL 18.2 Item 2.

     NOTE: *If the fault persists after startup, perform dC132 to verify all numbers match. Go to Serial Number Re-Synchronization in GSN (Library 1503).*

   - IIT assembly PL 21.1 Item 14.

062-362 X Hard Fail RAP

062-362 Hard modification of authentication device was detected.

Procedure

WARNING

Ensure that the electricity to the machine is switched off while performing tasks that do not need electricity. Refer to GP 10. Disconnect the power cord. Electricity can cause death or injury. Moving parts can cause injury.

1. Switch off, then switch on the machine, GP 10.
2. If the fault persists, install a new ESS PWB, PL 18.1A Item 5 (B400) or PL 18.1B Item 5 (B405).

062-380, 386 Lamp Illumination Fail RAP

062-380 Insufficient lamp brightness was detected when performing AGC.

062-386 A CCD output error was detected when performing AOC.

Procedure

WARNING

Ensure that the electricity to the machine is switched off while performing tasks that do not need electricity. Refer to GP 10. Disconnect the power cord. Electricity can cause death or injury. Moving parts can cause injury.

1. Switch off, then switch on the machine, GP 10.
2. Clean the document glass and the white strip, GP 24.
3. Check the connections and wiring between the ESS PWB (P/J451, P/J452, P/J453), and the IIT assembly PL 21.1 Item 14, for an open circuit, short circuit, or poor contact.
4. Perform GP 25, Function 03. NVRAM INIT MODE.

CAUTION

When installing a new ESS PWB and a new MCU PWB at the same time, first install the new ESS PWB, by following REP 18.1 (B405), REP 18.2 (B400). If the new ESS PWB installation is successful, switch off the machine, GP 10. Then, install the new MCU PWB.

5. If the fault persists, install new components as necessary:
   - ESS PWB, PL 18.1A Item 5 (B400) or PL 18.1B Item 5 (B405).
   - MCU PWB, PL 18.2 Item 2.

     NOTE: *If the fault persists after startup, perform dC132 to verify all numbers match. Go to Serial Number Re-Synchronization in GSN (Library 1503).*

   - IIT assembly PL 21.1 Item 14.
   - Scanner Assembly PL 21.1 Item 1.

062-790 Recognition Fail RAP

062-790 The document being scanned is prohibited by law.

Procedure

Advise the customer to refer to the Legal Notices in the User Guide to check the types of document available for copying.

071-101 Tray 1 Misfeed RAP

071-101 Paper does not actuate the registration sensor within the specified time after tray 1 feed starts.

Initial Actions

- Check the condition of the paper in tray 1. Refer to GP 15 Paper and Media Size Specifications.
- Check that the tray 1 paper guides are set correctly.

Procedure

WARNING

Ensure that the electricity to the machine is switched off while performing tasks that do not need electricity. Refer to GP 10. Disconnect the power cord. Electricity can cause death or injury. Moving parts can cause injury.

Refer to the procedures that follow as necessary:

- GP 6 How to Check a Motor.

Perform the steps that follow:

1. Check for obstructions in the paper path.
2. Check the tray 1 feed roll, PL 9.2 Item 4, for foreign substances or wear. Clean or install new components as necessary.
3. Check the registration actuator, PL 15.2 Item 20 for foreign substances or wear. Clean or install new components as necessary.
4. Refer to Wiring Diagram 8. Enter dC330, code 071-102. Move the registration sensor shutter, PL 15.2 Item 14 to actuate the registration sensor. If the display does not change, install a new HVPS, PL 18.2 Item 5.

   NOTE: *The registration sensor is mounted on the HVPS.*

5. Enter dC330, code 071-005. Check the feeder clutch, PL 15.2 Item 16.
6. Enter dC330, code 071-001. Check the main motor, PL 11.1A Item 19 (B400) or PL 11.1B Item 19 (B405).
7. If the fault persists, install a new MCU PWB, PL 18.2 Item 2.

072-101 Tray 2 Misfeed RAP

072-101 Paper does not actuate the tray 2 path sensor within the specified time after tray 2 feed starts.

Initial Actions

- Check the condition of the paper in tray 2. Refer to GP 15 Paper and Media Size Specifications.
- Check that the tray 2 paper guides are set correctly.

Procedure

WARNING

Ensure that the electricity to the machine is switched off while performing tasks that do not need electricity. Refer to GP 10. Disconnect the power cord. Electricity can cause death or injury. Moving parts can cause injury.

Refer to the procedures that follow as necessary:

- GP 6 How to Check a Motor.
- GP 7 How to Check a Sensor.

Perform the steps that follow:

1. Check for obstructions in the paper path.
2. Check the tray 2 feed roll, PL 11.2 Item 13, for foreign substances or wear. Clean or install new components as necessary.
3. Enter dC330, code 071-119. Check the path sensor, PL 11.4 Item 4.
4. Enter dC330, code 071-018. Check the option feeder clutch assembly, PL 11.1A Item 8 (B400) or PL 11.1B Item 8 (B405).
5. Enter dC330, code 071-021. Check the takeaway roll assembly, PL 11.2 Item 21.
6. Enter dC330, code 071-009. Check the motor assembly, PL 11.1A Item 19 (B400) or PL 11.1B Item 19 (B405).
7. Refer to Wiring Diagram 13. Check the connections and wiring between the MCU PWB, PL 18.2 Item 2, and the option feeder PWB assembly PL 11.1A Item 5 (B400) or PL 11.1B Item 5 (B405), for an open circuit, short circuit or poor contact.
8. If the fault persists, install a new MCU PWB, PL 18.2 Item 2.

072-310 to 072-311 Tray 2 Fail RAP

071-310 Tray 2 feeder motor fail detected.

071-311 Tray 2 incorrect operation mode detected.

Initial Actions

- Ensure the 550-sheet option feeder (Tray 2) is correctly seated.
- Power off, then power on the machine, GP 10. Check if the fault recurs.

Procedure

WARNING

Ensure that the electricity to the machine is switched off while performing tasks that do not need electricity. Refer to GP 10. Disconnect the power cord. Electricity can cause death or injury. Moving parts can cause injury.

Perform the steps that follow:

1. Switch the machine off, then on, GP 10.
2. Reload the software, GP 4.
3. If the fault persists, install a new option feeder (tray 2), PL 11.1A Item 1 (B400) or PL 11.1B Item 1 (B405).

075-100 Bypass Tray (MSI) Jam RAP

075-100 Paper does not actuate the registration path sensor within the specified time after bypass tray feed starts.

Initial Actions

- Check the condition of the paper in the MSI. Refer to GP 15 Paper and Media Size Specifications
- Check that the paper guides are set correctly.

Procedure

WARNING

Ensure that the electricity to the machine is switched off while performing tasks that do not need electricity. Refer to GP 10. Disconnect the power cord. Electricity can cause death or injury. Moving parts can cause injury.

Refer to the procedures that follow as necessary:

- GP 8 How to Check a Solenoid or Clutch.

Perform the steps that follow:

1. Check for obstructions in the paper path.
2. Check the MSI feed roll assembly, PL 13.1 Item 18 for foreign substances or wear. Clean or install new components as necessary.
3. Enter dC330, code 071-004. Check the MSI feed solenoid, PL 13.1 Item 5.
4. If the fault persists, install a new MCU PWB, PL 18.2 Item 2.

077-101, 077-104 Registration/Exit Sensor Jam RAP

077-101 The paper does not deactuate the registration sensor within the specified time after the registration clutch is energized.

077-104 The paper deactuated the fuser exit sensor earlier than the specified time.

Initial Actions

- Check the condition of the paper in tray 1. Refer to GP 15 Paper and Media Size Specifications.
- Check that the tray 1 paper guides are set correctly.

Procedure

WARNING

Ensure that the electricity to the machine is switched off while performing tasks that do not need electricity. Refer to GP 10. Disconnect the power cord. Electricity can cause death or injury. Moving parts can cause injury.

Refer to the procedures that follow as necessary:

- GP 6 How to Check a Motor.
- GP 7 How to Check a Sensor.

Perform the steps that follow:

1. Check for obstructions in the paper path.
2. Check the tray 1 feed roll, PL 9.2 Item 4, for foreign substances or wear. Clean or install new components as necessary.
3. Refer to Wiring Diagram 8. Enter dC330, code 071-102. Move the registration sensor shutter, PL 15.2 Item 14 to actuate the registration sensor. If the display does not change, install a new HVPS, PL 18.2 Item 5.

   NOTE: *The registration sensor is mounted on the HVPS.*

4. Enter dC330, code 071-006. Check the registration clutch, PL 15.2 Item 4.
5. Enter dC330, code 071-103. Check the exit sensor, PL 17.1 Item 1.
6. Enter dC330, code 071-001. Check the main motor, PL 11.1A Item 19 (B400) or PL 11.1B Item 19 (B405).
7. If the fault persists, install a new MCU PWB, PL 18.2 Item 2.

077-117 Tray 2 Registration Sensor Jam RAP

077-117 The paper does not actuate the registration sensor within the specified time after tray 2 feed starts.

Initial Actions

- Check the condition of the paper in tray 2. Refer to GP 15 Paper and Media Size Specifications.
- Check that the tray 2 paper guides are set correctly.

Procedure

WARNING

Ensure that the electricity to the machine is switched off while performing tasks that do not need electricity. Refer to GP 10. Disconnect the power cord. Electricity can cause death or injury. Moving parts can cause injury.

Refer to the procedures that follow as necessary:

- GP 6 How to Check a Motor.

Perform the steps that follow:

1. Check for obstructions in the paper path.
2. Check the tray 1 feed roll, PL 9.2 Item 4, and option feeder (tray 2, 3 or 4) feed roll assembly, PL 11.2 Item 13, for foreign substances or wear. Clean or install new components as necessary.
3. Check the registration actuator, PL 15.2 Item 20 for foreign substances or wear. Clean or install new components as necessary.
4. Refer to Wiring Diagram 8. Enter dC330, code 071-102. Move the registration sensor shutter, PL 15.2 Item 14 to actuate the registration sensor. If the display does not change, install a new HVPS, PL 18.2 Item 5.

   NOTE: *The registration sensor is mounted on the HVPS.*

5. Enter dC330, code 071-005. Check the feeder clutch, PL 15.2 Item 16.
6. Enter dC330, code 071-001. Check the main motor, PL 11.1A Item 19 (B400) or PL 11.1B Item 19 (B405).
7. If the fault persists, install a new MCU PWB, PL 18.2 Item 2.

077-119 Image Formation Fail Jam RAP

077-119 The paper feeds too slowly for the image formation to complete.

Initial Actions

- Check the condition of the paper in all trays. Refer to GP 15 Paper and Media Size Specifications.
- Check that the paper guides in all trays are set correctly.

Procedure

WARNING

Ensure that the electricity to the machine is switched off while performing tasks that do not need electricity. Refer to GP 10. Disconnect the power cord. Electricity can cause death or injury. Moving parts can cause injury.

Refer to the procedures that follow as necessary:

- GP 6 How to Check a Motor.
- GP 7 How to Check a Sensor.

Perform the steps that follow:

1. Check for obstructions in the paper path.
2. Check the tray 1 feed roll, PL 9.2 Item 4, and option feeder (tray 2, 3 or 4) feed roll assembly, PL 11.2 Item 13, for foreign substances or wear. Clean or install new components as necessary.
3. Refer to Wiring Diagram 8. Enter dC330, code 071-102. Move the registration sensor shutter, PL 15.2 Item 14 to actuate the registration sensor. If the display does not change, install a new HVPS, PL 18.2 Item 5.

   NOTE: *The registration sensor is mounted on the HVPS.*

4. Enter dC330, code 071-006. Check the registration clutch, PL 15.2 Item 4.
5. Enter dC330, code 071-103. Check the exit sensor, PL 17.1 Item 1.
6. Enter dC330, code 071-001. Check the main motor, PL 11.1A Item 19 (B400) or PL 11.1B Item 19 (B405).
7. If the fault persists, install a new MCU PWB, PL 18.2 Item 2.

077-123 Registration Sensor Jam (Duplex) RAP

077-123 Paper does not actuate the registration sensor in the specified time after the registration clutch in energized in duplex mode.

Initial Actions

Check the condition of the paper in all trays. Refer to GP 15 Paper and Media Size Specifications

Procedure

WARNING

Ensure that the electricity to the machine is switched off while performing tasks that do not need electricity. Refer to GP 10. Disconnect the power cord. Electricity can cause death or injury. Moving parts can cause injury.

Refer to the procedures that follow as necessary:

- GP 6 How to Check a Motor.
- GP 7 How to Check a Sensor.
- GP 8 How to Check a Solenoid or Clutch.

Perform the steps that follow:

1. Check for obstructions in the paper path.
2. Check the exit roll assembly, PL 17.1 Item 5 for foreign substances or wear. Clean or install new components as necessary.
3. Enter dC330, code 071-007. Check the T21 exit clutch assembly, PL 3.1 Item 6.
4. Enter dC330, code 071-008. Check the T24 inverter clutch assembly, PL 3.1 Item 7.
5. Check the duplex roll assembly, PL 14.1 Item 2 for foreign substances or wear. Clean or install new components as necessary.
6. Check the registration actuator, PL 15.2 Item 20 for foreign substances or wear. Clean or install new components as necessary.
7. Refer to Wiring Diagram 8. Enter dC330, code 071-102. Move the registration sensor shutter, PL 15.2 Item 14 to actuate the registration sensor. If the display does not change, install a new HVPS, PL 18.2 Item 5.

   NOTE: *The registration sensor is mounted on the HVPS.*

8. Enter dC330, code 071-001. Check the main motor, PL 11.1A Item 19 (B400) or PL 11.1B Item 19 (B405).
9. If the fault persists, install a new MCU PWB, PL 18.2 Item 2.

077-300 Front Cover Open RAP

077-300 Front cover was opened during run.

Procedure

WARNING

Ensure that the electricity to the machine is switched off while performing tasks that do not need electricity. Refer to GP 10. Disconnect the power cord. Electricity can cause death or injury. Moving parts can cause injury.

Refer to the procedure that follows as necessary:

- GP 9 How to Check a Switch

Perform the steps that follow:

1. Check the actuator on the front cover for damage. If necessary, install a new interlock actuator, PL 19.1A Item 3 (B400) or PL 19.1B Item 3 (B405).
2. Enter dC330 code 041-300. Check the front cover interlock switch, PL 18.1A Item 12 (B400) or PL 18.1B Item 23 (B405).
3. If the fault persists, install new components as necessary:
   - Front cover interlock switch, PL 18.1A Item 12 (B400) or PL 18.1B Item 23 (B405).
   - MCU PWB, PL 18.2 Item 2
   - LVPS, PL 18.1A Item 10 (B400) or PL 18.1B Item 10 (B405).

077-322 Option Tray Communication Fail RAP

077-322 A communication failure between the IOT and the option tray is detected.

Procedure

WARNING

Ensure that the electricity to the machine is switched off while performing tasks that do not need electricity. Refer to GP 10. Disconnect the power cord. Electricity can cause death or injury. Moving parts can cause injury.

Perform the steps that follow:

1. Ensure the option feeder (tray 2, 3 or 4) is correctly seated.
2. Power off, then power on the machine, GP 10.
3. If the fault persists, install new components as necessary:
   - Option feeder, PL 11.1A Item 1 (B400) or PL 11.1B Item 1 (B405).
   - MCU PWB, PL 18.2 Item 2.

077-327 Invalid Option Feeder RAP

077-327 An invalid option feeder (tray 2, 3 or 4) is detected.

Procedure

WARNING

Ensure that the electricity to the machine is switched off while performing tasks that do not need electricity. Refer to GP 10. Disconnect the power cord. Electricity can cause death or injury. Moving parts can cause injury.

Perform the steps that follow:

1. Ensure the option feeder (tray 2, 3 or 4) is correctly seated.
2. Power off, then power on the machine, GP 10.
3. If the fault persists, install the correct Option feeder, PL 11.1A Item 1 (B400) or PL 11.1B Item 1 (B405).

077-909 IOT Static Jam RAP

077-909 Paper is present on the registration, exit or option feeder path sensors, when the machine is powered on, shut down or when the option feeder tray, rear cover or side cover is closed.

Procedure

WARNING

Ensure that the electricity to the machine is switched off while performing tasks that do not need electricity. Refer to GP 10. Disconnect the power cord. Electricity can cause death or injury. Moving parts can cause injury.

Perform the steps that follow:

1. Clear the paper jam.

077-911, 077-967 to 077-968 Paper Mismatch RAP

077-911 Paper size is different from specified paper size.

077-967 Paper quality is different from specified paper quality.

077-968 Paper quality is different from specified paper quality.

Procedure

WARNING

Ensure that the electricity to the machine is switched off while performing tasks that do not need electricity. Refer to GP 10. Disconnect the power cord. Electricity can cause death or injury. Moving parts can cause injury.

Perform the steps that follow:

1. Advise the customer to specify the correct paper size and quality when submitting the job.

091-300 Rear Cover Interlock Open RAP

091-300 Rear cover is detected as open.

Initial Actions

- Check rear cover latch and fitment.
- Check rear interlock actuator.
- Check rear cover interlock switch position and condition, PL 15.1A Item 97 (B400) or PL 15.1B Item 97 (B405).

Procedure

WARNING

Ensure that the electricity to the machine is switched off while performing tasks that do not need electricity. Refer to GP 10. Disconnect the power cord. Electricity can cause death or injury. Moving parts can cause injury.

Refer to the procedure that follows as necessary:

- GP 9 How to Check a Switch

Perform the steps that follow:

1. Enter dC330 code 041-301. Check the rear cover interlock switch, PL 15.1A Item 97 (B400) or PL 15.1B Item 97 (B405).
2. If the fault persists, install new components as necessary:
   - Rear cover interlock switch, PL 15.1A Item 97 (B400) or PL 15.1B Item 97 (B405).
   - MCU PWB, PL 18.2 Item 2
   - LVPS, PL 18.1A Item 10 (B400) or PL 18.1B Item 10 (B405).

091-401, 091-406 Drum Cartridge Near End of Life RAP

091-401 Drum cartridge is near end of life.

091-406 Drum cartridge is near end of life.

Procedure

Information only. No service action necessary. Advise the customer that the drum cartridge is near end of life.

091-402, 091-913 Drum Cartridge End of Life RAP

091-402 Drum cartridge end of life.

091-913 Drum cartridge end of life.

Procedure

Install a new drum cartridge, PL 8.1 Item 2.

091-914 to 091-915 Drum Cartridge CRUM Data Error RAP

091-914 Drum Cartridge CRUM communication failure detected.

091-915 Drum Cartridge CRUM physical damage detected.

Procedure

Perform the steps that follow:

1. Remove, then reinstall the toner cartridge, PL 8.1 Item 2.
2. If the fault persists, install a genuine Drum Cartridge, PL 8.1 Item 1.

091-916 Drum Cartridge CRUM Authentication Error RAP

091-916 Invalid authentication area data of Drum Cartridge CRUM detected.

Procedure

Perform the steps that follow:

1. Remove, then reinstall the toner cartridge, PL 8.1 Item 2.
2. If the fault persists, install a genuine Xerox toner cartridge, PL 8.1 Item 2.

091-921 Toner Cartridge CRUM Communication Error RAP

091-921 Toner Cartridge CRUM is not installed in the correct position.

Procedure

WARNING

Ensure that the electricity to the machine is switched off while performing tasks that do not need electricity. Refer to GP 10. Disconnect the power cord. Electricity can cause death or injury. Moving parts can cause injury.

Perform the steps that follow:

1. Switch off, then switch on the machine, GP 10.
2. Remove, then reinstall the toner cartridge, PL 8.1 Item 2.
3. Check the toner cartridge CRUM connector for damage and contamination.
4. Refer to Wiring Diagram 1 (B405) or Wiring Diagram 2 (B400). Check the wiring between the toner CRUM connector assembly, PL 5.1 Item 2, and the MCU PWB, PL 18.2 Item 2 for an open circuit, short circuit or poor contact.
5. If the fault persists, install new components as necessary:
   - Toner CRUM connector assembly, PL 5.1 Item 2.
   - MCU PWB, PL 18.2 Item 2.

092-321 ADC K Patch Fail RAP

092-321 The black ADC electric patch is abnormally light or a fault in the ADC sensor was detected.

Procedure

WARNING

Ensure that the electricity to the machine is switched off while performing tasks that do not need electricity. Refer to GP 10. Disconnect the power cord. Electricity can cause death or injury. Moving parts can cause injury.

Perform the steps that follow:

1. Switch off, then switch on the machine, GP 10.
2. Remove then reinstall the drum cartridge PL 8.1 Item 1.
3. If the fault persists, install a new toner cartridge PL 8.1.

093-406 Toner Cartridge Near End of Life RAP

093-406 Toner cartridge is near end of life.

Procedure

Information only. No service action necessary. Advise the customer that the toner cartridge is almost empty.

093-335, 093-339, 093-916 Toner CRUM Communication Error RAP

093-335 Toner CRUM authentication IC communication error.

093-339 Toner CRUM authentication IC communication error 2.

093-916 Toner cartridge CRUM is not installed in the correct position.

Procedure

Perform the steps that follow:

1. Touch **Restart** to restart the machine and re-establish communication between the MCU and toner cartridge CRUM.
2. If the fault persists, switch off the machine, GP 10, then reseat the toner cartridge, PL 8.1 Item 2.
3. Switch on the machine, GP 10.

093-444, 093-912 Toner Cartridge Empty RAP

093-444 The toner cartridge is empty.

093-912 The toner cartridge is empty.

Procedure

Install a new toner cartridge, PL 8.1 Item 2.

093-916 Toner CRUM Not Readable RAP

093-916 The toner cartridge CRUM is unreadable.

Procedure

Perform the steps that follow:

1. Reseat the toner cartridge.
2. If the fault persists, install a new toner cartridge, PL 8.1 Item 2.

093-924 to 093-925 Drum CRUM Data Failure RAP

093-924 Toner cartridge CRUM communication failure detected.

093-925 Toner cartridge CRUM damage is detected.

Procedure

Perform the steps that follow:

1. Remove, then reinstall the toner cartridge, PL 8.1 Item 2.
2. If the fault persists, install a genuine Xerox toner cartridge, PL 8.1 Item 2.

093-926 Toner CRUM Authentication Fail RAP

093-926 Invalid authentication area data of toner cartridge CRUM detected.

Procedure

Perform the steps that follow:

1. Remove, then reinstall the toner cartridge.
2. If the fault persists, install a genuine Xerox toner cartridge, PL 8.1 Item 2.

096-918 3rd Party Toner CRUM Detected RAP

096-918 Invalid 3rd Party toner cartridge CRUM detected.

Procedure

Perform the steps that follow:

1. Remove, then reinstall the toner cartridge.
2. If the fault persists, install a genuine Xerox toner cartridge, PL 8.1 Item 2.

099-396 to 099-399 Fuser Temperature Fault RAP

099-364 The recovery time from low temperature not ready state has become longer than the setting time.

Procedure

For information only, no service action necessary.

102-311 to 102-319 USB Dongle Errors RAP

102-311 USB dongle access failed during the initial installation by the USB dongle.

102-312 It was detected that MAC address of another M/C was recorded in the dongle during the initial installation by the USB dongle.

102-313 An illegal IOT speed setting key was detected during the initial installation by the USB dongle.

102-314 Setting the IOT speed setting key failed during the initial installation by the USB dongle.

102-315 Setting the SW Key failed during the initial installation by the USB dongle.

102-316 Setting the supply setting failed during the initial installation by the USB dongle.

102-317 Setting the page pack failed during the initial installation by the USB dongle.

102-318 Setting the country code failed during the initial installation by the USB dongle.

102-319 The NVM rewriting list process failed during the initial installation by the USB dongle.

Procedure

WARNING

Ensure that the electricity to the machine is switched off while performing tasks that do not need electricity. Refer to GP 10. Disconnect the power cord. Electricity can cause death or injury. Moving parts can cause injury.

Perform the steps that follow:

1. Ensure the USB dongle is installed correctly.
2. Switch off, then switch on the machine, GP 10.
3. Perform OF 3 Special Boot Modes RAP.
4. Ensure that all connectors on the ESS PWB, PL 18.1A Item 5 (B400) / PL 18.1B Item 5 (B405), are securely connected. Ensure all surface mounted modules on the PWB are securely connected.
5. Reload the software, GP 4.
6. If the fault persists, install new components as necessary:
   - Front USB harness, PL 18.1A Item 13 (B400) / PL 18.1B Item 17 (B405).
   - ESS PWB, PL 18.1A Item 5 (B400) / PL 18.1B Item 5 (B405).

102-356 EWS Soft Fail RAP

102-356 Fatal error related to EWS.

Procedure

WARNING

Ensure that the electricity to the machine is switched off while performing tasks that do not need electricity. Refer to GP 10. Disconnect the power cord. Electricity can cause death or injury. Moving parts can cause injury.

Perform the steps that follow:

1. Switch off, then switch on the machine, GP 10.
2. Perform OF 3 Special Boot Modes RAP.
3. Ensure that all connectors on the ESS PWB, PL 18.1A Item 5 (B400) / PL 18.1B Item 5 (B405), are securely connected. Ensure all surface mounted modules on the PWB are securely connected.
4. Initialise the hard disk, refer to dC355 Hard Disk Diagnostics.
5. Reload the software, GP 4.
6. If the fault persists, ESS PWB, PL 18.1A Item 5 (B400) / PL 18.1B Item 5 (B405).

103-310 to 103-313 Hybrid Water Mark RAP

103-310 The secure watermark kit cannot be made available because the hybrid watermark detection hardware is not installed.

103-311 The secure watermark Kit is not enabled.

103-312 The secure watermark kit cannot be made available because the hybrid watermark detection hardware for document side 2 is not installed.

103-313 The secure watermark kit did not become available because of insufficient IISS extension memory.

Procedure

For information only. No service action necessary.

103-314 Prohibited Originals RAP

103-314 Possible prohibited originals (system fail).

Procedure

WARNING

Ensure that the electricity to the machine is switched off while performing tasks that do not need electricity. Refer to GP 10. Disconnect the power cord. Electricity can cause death or injury. Moving parts can cause injury.

Perform the steps that follow:

1. Switch off, then switch on the machine, GP 10.
2. Ensure that all connectors on the ESS PWB, PL 18.1A Item 5 (B400) / PL 18.1B Item 5 (B405), are securely connected. Ensure all surface mounted modules on the PWB are securely connected.
3. Reload the software, GP 4.
4. If the fault persists, install new ESS PWB, PL 18.1A Item 5 (B400) / PL 18.1B Item 5 (B405).

116-210, 116-211 Media Reader Error RAP

116-210 Fatal error of reader.

116-211 Connection cable disconnected.

Procedure

WARNING

Ensure that the electricity to the machine is switched off while performing tasks that do not need electricity. Refer to GP 10. Disconnect the power cord. Electricity can cause death or injury. Moving parts can cause injury.

Perform the steps that follow:

1. Switch off, then switch on the machine, GP 10.
2. Ensure that all connectors on the ESS PWB, PL 18.1A Item 5 (B400) or PL 18.1B Item 5 (B405) and the MCU PWB, PL 18.2 Item 2 are connected securely. Ensure that all surface-mounted modules on the ESS PWB and MCU PWB are connected securely.
3. Upgrade the software, GP 4.
4. If the fault persists, install a new ESS PWB, PL 18.1A Item 5 (B400) or ESS PWB, PL 18.1B Item 5 (B405).

116-212, 116-220, 116-310 to 116-311 ESS Error RAP

116-212 MediaLib internal logic error has occurred.

116-220 The downloader software that processes downloads within the ESS failed to initialize during transition into download mode.

116-310 An error was detected when the ESS font ROM DIMM #2 was checked.

116-311 A fail is detected during a check of ESS font ROM DIMM #3.

Procedure

WARNING

Ensure that the electricity to the machine is switched off while performing tasks that do not need electricity. Refer to GP 10. Disconnect the power cord. Electricity can cause death or injury. Moving parts can cause injury.

Perform the steps that follow:

1. Switch off, then switch on the machine, GP 10.
2. Perform OF 3 Special Boot Modes RAP.
3. Ensure that all connectors on the ESS PWB, PL 18.1A Item 5 (B400) or PL 18.1B Item 5 (B405) and the MCU PWB, PL 18.2 Item 2 are connected securely. Ensure that all surface-mounted modules on the ESS PWB and MCU PWB are connected securely.
4. Upgrade the software, GP 4.
5. If the fault persists, install a new ESS PWB, PL 18.1A Item 5 (B400) or PL 18.1B Item 5 (B405).

116-312, 116-313 HDD Encrypt Key Fail RAP

116-312 An error in the encryption key was detected on booting.

116-313 An encryption setting error was detected on booting.

Procedure

WARNING

Ensure that the electricity to the machine is switched off while performing tasks that do not need electricity. Refer to GP 10. Disconnect the power cord. Electricity can cause death or injury. Moving parts can cause injury.

Perform the steps that follow:

1. If installed, initialize the HDD, refer to dC355 Hard Disk Diagnostics.
2. When the system has been recovered, advise the customer to set a correct HDD encryption key.
3. If the fault persists, perform GP 25, Function 04. HDD FORMAT MODE.
4. If no HDD exists, perform GP 25, Function 03. NVRAM INIT MODE.

116-314 Ethernet Address Fail RAP

116-314 An Ethernet error was detected.

Procedure

WARNING

Ensure that the electricity to the machine is switched off while performing tasks that do not need electricity. Refer to GP 10. Disconnect the power cord. Electricity can cause death or injury. Moving parts can cause injury.

Perform the steps that follow:

1. Switch off, then switch on the machine, GP 10.
2. Ensure that the EMMC card, PL 18.1A Item 6 (B400) or PL 18.1B Item 6 (B405) is connected securely.
3. Upgrade the software, GP 4.
4. If the fault persists, install a new ESS PWB, PL 18.1A Item 5 (B400) or PL 18.1B Item 5 (B405).

116-319 Controller and UI Configuration RAP

116-319 A mismatch between the installed ROM and UI.

Procedure

WARNING

Ensure that the electricity to the machine is switched off while performing tasks that do not need electricity. Refer to GP 10. Disconnect the power cord. Electricity can cause death or injury. Moving parts can cause injury.

Perform the steps that follow:

1. Switch off, then switch on the machine, GP 10.
2. Refer to Wiring Diagram 10 (B405) or Wiring Diagram 11 (B400). Ensure that all connectors on the UI assembly, PL 1.1A Item 4 (B400) or PL 1.1B Item 4 (B405) and the ESS PWB, PL 18.1A Item 5 (B400) or ESS PWB, PL 18.1B Item 5 (B405) are connected securely.
3. Upgrade the software, GP 4.
4. If the fault persists, install new components as necessary:
   - UI assembly, PL 1.1A Item 4 (B400) or PL 1.1B Item 4 (B405).
   - ESS PWB, PL 18.1A Item 5 (B400) or PL 1.1B Item 5 (B405).

116-320, 116-345 Process Error RAP

116-320 Fatal error of the STREAMZ. A problem has occurred in the software processing and it is unable to continue with the subsequent processes.

116-345 Token Ring Control IC Access error.

Procedure

Switch off, then switch on the machine, GP 10.

116-321, 322, 328, 329, 338 Software Error RAP

116-321 Due to an error in software processing, subsequent processes cannot be performed.

116-322 Due to an error in software processing, subsequent processes cannot be performed.

116-328 A failure was detected in the level 2 cache built in the CPU.

116-329 A system call error related to the serial I/F was detected.

116-338 Overall JBA fatal error. Due to an error in software processing, subsequent processes cannot be performed.

Procedure

WARNING

Ensure that the electricity to the machine is switched off while performing tasks that do not need electricity. Refer to GP 10. Disconnect the power cord. Electricity can cause death or injury. Moving parts can cause injury.

Perform the steps that follow:

1. Switch off, then switch on the machine, GP 10.
2. Perform OF 3 Special Boot Modes RAP.
3. Ensure that all connectors on the ESS PWB, PL 18.1A Item 5 (B400) or PL 18.1B Item 5 (B405) and the MCU PWB, PL 18.2 Item 2 are connected securely. Ensure that all surface-mounted modules on the ESS PWB and MCU PWB are connected securely.
4. Upgrade the software, GP 4.
5. If the fault persists, install a new ESS PWB, PL 18.1A Item 5 (B400) or PL 18.1B Item 5 (B405).

116-323 ESS NVRAM W/R Check Fail RAP

116-323 ESS NVRAM W/R check fail.

Procedure

WARNING

Ensure that the electricity to the machine is switched off while performing tasks that do not need electricity. Refer to GP 10. Disconnect the power cord. Electricity can cause death or injury. Moving parts can cause injury.

Perform the steps that follow:

1. Switch off, then switch on the machine, GP 10.
2. Perform OF 3 Special Boot Modes RAP.
3. Ensure that all connectors on the ESS PWB, PL 18.1A Item 5 (B400) or PL 18.1B Item 5 (B405) and the MCU PWB, PL 18.2 Item 2 are connected securely. Ensure that all surface-mounted modules on the ESS PWB and MCU PWB are connected securely.
4. Upgrade the software, GP 4.
5. If the fault persists, install a new ESS PWB, PL 18.1A Item 5 (B400) or PL 18.1B Item 5 (B405).

116-324 Exception Fail RAP

116-324 A fatal software exception error has occurred in the controller PWB CPU.

Procedure

WARNING

Ensure that the electricity to the machine is switched off while performing tasks that do not need electricity. Refer to GP 10. Disconnect the power cord. Electricity can cause death or injury. Moving parts can cause injury.

Perform the steps that follow:

1. Switch off, then switch on the machine, GP 10.
2. Ensure that all connectors on the ESS PWB, PL 18.1A Item 5 (B400) or PL 18.1B Item 5 (B405) and the MCU PWB, PL 18.2 Item 2 are connected securely. Ensure that all surface-mounted modules on the ESS PWB and MCU PWB are connected securely.
3. Upgrade the software, GP 4.
4. Check the wiring between the ESS PWB, PL 18.1A Item 5 (B400) or PL 18.1B Item 5 (B405) and the HDD.
5. If installed, initialise the HDD. Refer to dC355 Hard Disk Diagnostics.
6. Install a new HDD, PL 18.1A Item 91 (B400) or PL 18.1B Item 91 (B405).

116-325 ESS Fan Fail RAP

116-325 An error occurred in the rotation of the ESS fan.

Procedure

WARNING

Ensure that the electricity to the machine is switched off while performing tasks that do not need electricity. Refer to GP 10. Disconnect the power cord. Electricity can cause death or injury. Moving parts can cause injury.

Perform the steps that follow:

1. Switch off, then switch on the machine, GP 10.
2. Upgrade the software, GP 4.
3. If the fault persists, install a new ESS PWB, PL 18.1A Item 5 (B400) or PL 18.1B Item 5 (B405).

116-330, 331, 336, 337, 339 HDD File System Fail RAP

116-330 HDD check at power-on detected that an error has occurred or the HDD was not formatted.

116-331 A log related error was detected.

116-336 An error was detected when the HDD was accessed.

116-337 Overall SNTP fatal error. Due to an error in software processing, subsequent processes cannot be performed.

116-339 When the JBA is started up, the HDD is not installed.

Procedure

Perform GP 25, Function 01. JOB LOG CLEAR MODE.

Perform the 016-210, 506, 777, 780, 798 HDD Error RAP.

116-334 ESS NVRAM Data Compare Fail

116-334 ESS NVRAM data compare fail.

Procedure

WARNING

Ensure that the electricity to the machine is switched off while performing tasks that do not need electricity. Refer to GP 10. Disconnect the power cord. Electricity can cause death or injury. Moving parts can cause injury.

Perform the steps that follow:

1. Switch off, then switch on the machine, GP 10.
2. Perform OF 3 Special Boot Modes RAP.
3. Check the faults, dC125. If a 124-3XX fault code is displayed, perform the relevant RAP.
4. Ensure that all connectors on the ESS PWB, PL 18.1A Item 5 (B400) or PL 18.1B Item 5 (B405) and the MCU PWB, PL 18.2 Item 2 are connected securely. Ensure that all surface-mounted modules on the ESS PWB and MCU PWB are connected securely.
5. Upgrade the software, GP 4.
6. If the fault persists, install a new ESS PWB, PL 18.1A Item 5 (B400) or PL 18.1B Item 5 (B405).

116-340 Not Enough Memory RAP

116-340 Insufficient memory was detected during initialization. A PS option requiring an additional memory was installed but memory was not added.

Procedure

Switch off, then switch on the machine, GP 10.

116-341, 342, 393, 394 ROM Version Incorrect RAP

116-341 Versions of the multiple ROM DIMMs installed are incorrect.

116-342 Fatal error related to the SNMP agent.

116-393 AAA manager fatal error.

116-394 Abnormal authentication mode and accounting mode settings detected during AAA manager boot sequence.

Procedure

Upgrade the software, GP 4.

116-343, 346, 357, 359 Main PWB Error RAP

116-343 An error was detected in the IC in the ESS PWB.

116-346 A response such as system function recall error was detected.

116-357 PS Fatal System Error

116-359 Fatal error in PLW.

Procedure

WARNING

Ensure that the electricity to the machine is switched off while performing tasks that do not need electricity. Refer to GP 10. Disconnect the power cord. Electricity can cause death or injury. Moving parts can cause injury.

Perform the steps that follow:

1. Switch off, then switch on the machine, GP 10.
2. Perform OF 3 Special Boot Modes RAP.
3. Ensure that all connectors on the ESS PWB, PL 18.1A Item 5 (B400) or PL 18.1B Item 5 (B405) and the MCU PWB, PL 18.2 Item 2 are connected securely. Ensure that all surface-mounted modules on the ESS PWB and MCU PWB are connected securely.
4. Upgrade the software, GP 4.
5. If the fault persists, install a new ESS PWB, PL 18.1A Item 5 (B400) or PL 18.1B Item 5 (B405).

116-348, 349, 358, 360, 374 Redirecter Fail RAP

116-348 Various fatal errors detected in the redirecter.

116-349 An error occurred when calling the Pflite function using the SIF.

116-358 Fatal error related to salutation.

116-360 Fatal error related to SMB.

116-374 Fatal error of auto SW.

Procedure

WARNING

Ensure that the electricity to the machine is switched off while performing tasks that do not need electricity. Refer to GP 10. Disconnect the power cord. Electricity can cause death or injury. Moving parts can cause injury.

Perform the steps that follow:

1. Switch off, then switch on the machine, GP 10.
2. Perform OF 3 Special Boot Modes RAP.
3. Ensure that all connectors on the ESS PWB, PL 18.1A Item 5 (B400) or PL 18.1B Item 5 (B405) and the MCU PWB, PL 18.2 Item 2 are connected securely. Ensure that all surface-mounted modules on the ESS PWB and MCU PWB are connected securely.
4. Upgrade the software, GP 4.
5. Advise the customer to ensure that the machine's network port settings are correct.
6. Perform the 016A Workflow Scanning Error Entry RAP.
7. If the fault persists, install a new ESS PWB, PL 18.1A Item 5 (B400) or PL 18.1B Item 5 (B405).

116-353, 354, 356, 361, 362 HDD Fail RAP

116-353 The HDD was not booted due to a physical HDD failure detected on booting.

116-354 The M/C was not started up due to a product code error detected in the HDD on booting.

116-356 The M/C was not started up due to an insufficient HDD capacity error detected during HDD formatting.

116-361 Fatal error of SPL HDD.

116-362 HDD Software Fail.

Procedure

Perform the 016-210, 506, 777, 780, 798 HDD Error RAP.

116-355 Agent Soft Fail RAP

116-355 Fatal error related to the SNMP Agent.

Procedure

WARNING

Ensure that the electricity to the machine is switched off while performing tasks that do not need electricity. Refer to GP 10. Disconnect the power cord. Electricity can cause death or injury. Moving parts can cause injury.

Perform the steps that follow:

1. Switch off, then switch on the machine, GP 10.
2. Upgrade the software, GP 4.
3. Advise the customer to ensure that the machine's network port settings are correct.
4. If the fault persists, install a new ESS PWB, PL 18.1A Item 5 (B400) or PL 18.1B Item 5 (B405).

116-363, 367, 370, 373, 376 Fatal Error RAP

116-363 BMLinkS/print service software failure.

116-367 Overall fatal error of Parallel.

116-370 Fatal error of XJCL.

116-373 Fatal error related to dynamic DNS.

116-376 Port 9100 software fail.

Procedure

WARNING

Ensure that the electricity to the machine is switched off while performing tasks that do not need electricity. Refer to GP 10. Disconnect the power cord. Electricity can cause death or injury. Moving parts can cause injury.

Perform the steps that follow:

1. Switch off, then switch on the machine, GP 10.
2. Perform OF 3 Special Boot Modes RAP.
3. Upgrade the software, GP 4.
4. Advise the customer to ensure that the machine's network port settings are correct.
5. Perform the 016A Workflow Scanning Error Entry RAP.
6. If the fault persists, install a new ESS PWB, PL 18.1A Item 5 (B400) or PL 18.1B Item 5 (B405).

116-364, 365, 366, 368, 371, 372, 375, 377 Timer Fail RAP

116-364 An error in the timer was detected.

116-365 Fatal error of the SPL.

116-366 Print utility operational failure, report generator operational failure.

116-368 Fatal error of DumpPrint.

116-371 PCL decomposer software failure.

116-372 Fatal error of P-formatter.

116-375 A response such as system function recall error was detected.

116-377 Video DMA failure was detected.

Procedure

WARNING

Ensure that the electricity to the machine is switched off while performing tasks that do not need electricity. Refer to GP 10. Disconnect the power cord. Electricity can cause death or injury. Moving parts can cause injury.

Perform the steps that follow:

1. Switch off, then switch on the machine, GP 10.
2. Perform OF 3 Special Boot Modes RAP.
3. Ensure that all connectors on the ESS PWB, PL 18.1A Item 5 (B400) or PL 18.1B Item 5 (B405) and the MCU PWB, PL 18.2 Item 2 are connected securely. Ensure that all surface-mounted modules on the ESS PWB and MCU PWB are connected securely.
4. Upgrade the software, GP 4.
5. If the fault persists, install a new ESS PWB, PL 18.1A Item 5 (B400) or PL 18.1B Item 5 (B405).

116-378, 379, 395 MCR/MCC Soft Fail RAP

116-378 Fatal error related to MCR. Due to an error in software processing, subsequent processes cannot be performed.

116-369 Fatal error related to MCC. Due to an error in software processing, subsequent processes cannot be performed.

116-395 Fatal error related to USB.

Procedure

WARNING

Ensure that the electricity to the machine is switched off while performing tasks that do not need electricity. Refer to GP 10. Disconnect the power cord. Electricity can cause death or injury. Moving parts can cause injury.

Perform the steps that follow:

1. Switch off, then switch on the machine, GP 10.
2. Upgrade the software, GP 4.
3. Advise the customer to ensure that the machine's network port settings are correct.
4. Perform the 016A Workflow Scanning Error Entry RAP.
5. If the fault persists, install a new ESS PWB, PL 18.1A Item 5 (B400) or PL 18.1B Item 5 (B405).

116-380 ESS Font ROM DIMM #1 Check Fail RAP

116-380 ESS Font ROM DIMM #1 check failure.

Procedure

WARNING

Ensure that the electricity to the machine is switched off while performing tasks that do not need electricity. Refer to GP 10. Disconnect the power cord. Electricity can cause death or injury. Moving parts can cause injury.

Perform the steps that follow:

1. Switch off, then switch on the machine, GP 10.
2. Ensure that all connectors on the ESS PWB, PL 18.1A Item 5 (B400) or PL 18.1B Item 5 (B405) and the MCU PWB, PL 18.2 Item 2 are connected securely. Ensure that all surface-mounted modules on the ESS PWB and MCU PWB are connected securely.
3. Ensure that the fax PWB, PL 18.1B Item 15 is installed correctly.
4. Refer to Wiring Diagram 1. Check the connections and wiring between the ESS PWB, PL 18.1B Item 5 and the fax PWB, PL 18.1B Item 15 for an open circuit, short circuit or poor contact.
5. Upgrade the software, GP 4.
6. If the fault persists, install a new ESS PWB, PL 18.1A Item 5 (B400) or PL 18.1B Item 5 (B405).

116-381 ABL Version Fail RAP

116-381 ABL did not match the ABL version information on the NVM, or corrupted data was detected.

Procedure

Initialize the NVM, refer to dC301 NVM Initialization.

NOTE: *Inform the customer that this will clear all address information.*

116-382 ABL Initialize Fail RAP

116-382 ABL has failed to access the NVM or HDD.

Procedure

Perform the steps that follow:

1. Enter dC131. Set NVM value 790-664 to 0.
2. Upgrade the software, GP 4.
3. If the fault persists, perform the 016-210, 506, 777, 780, 798 HDD Error RAP.

116-383 PIT Lib Failure RAP

116-383 Board Fault/non-installation, or HDD access error.

Procedure

Perform the steps that follow:

1. Switch off, then switch on the machine, GP 10.
2. Check dC125 Faults. If a new fault is listed, perform the relevant RAP.
3. If the fault persists, perform the 016-210, 506, 777, 780, 798 HDD Error RAP.

116-384, 385, 387, 389 DCS/IDC Software Fail RAP

116-384 DCS-related fatal error. Due to an error in software processing, subsequent processes cannot be performed.

116-385 Fatal error related to IDC. Due to an error in software processing, subsequent processes cannot be performed.

116-387 A fatal error has occurred during the usage of high compression board.

116-389 The necessary additional RAM was not installed.

Procedure

WARNING

Ensure that the electricity to the machine is switched off while performing tasks that do not need electricity. Refer to GP 10. Disconnect the power cord. Electricity can cause death or injury. Moving parts can cause injury.

Perform the steps that follow:

1. Switch off, then switch on the machine, GP 10.
2. Perform OF 3 Special Boot Modes RAP.
3. Ensure that all connectors on the ESS PWB, PL 18.1A Item 5 (B400) or PL 18.1B Item 5 (B405) and the MCU PWB, PL 18.2 Item 2 are connected securely. Ensure that all surface-mounted modules on the ESS PWB and MCU PWB are connected securely.
4. Upgrade the software, GP 4.
5. If the fault persists, install a new ESS PWB, PL 18.1A Item 5 (B400) or PL 18.1B Item 5 (B405).

116-386 Fax USB Port RAP

116-386 At startup, the fax USB cable was connected to an incorrect port.

Procedure

WARNING

Ensure that the electricity to the machine is switched off while performing tasks that do not need electricity. Refer to GP 10. Disconnect the power cord. Electricity can cause death or injury. Moving parts can cause injury.

Perform the steps that follow:

1. Switch off, then switch on the machine, GP 10.
2. Ensure that the fax USB cable is connected to the correct USB port.

116-388 No HDD RAP

116-388 The system detected that the HDD was not installed, even though the system configuration (with Fax and Finisher) requires a HDD.

Procedure

WARNING

Ensure that the electricity to the machine is switched off while performing tasks that do not need electricity. Refer to GP 10. Disconnect the power cord. Electricity can cause death or injury. Moving parts can cause injury.

Perform the steps that follow:

1. Switch off, then switch on the machine, GP 10.
2. If the fault persists, perform the 016-210, 506, 777, 780, 798 HDD Error RAP.

116-390 ROM and NVM Version Mismatch RAP

116-390 Incompatible versions of the standard ROM and NVM were detected.

Procedure

Perform the steps that follow:

1. Initialize the NVM, refer to dC301 NVM Initialization.

   NOTE: *Inform the customer that this will clear all address information.*

2. Upgrade the software, GP 4.

116-391 Illegal Code RAP

116-391 Country code/territory code/paper size group setting error detected.

Procedure

WARNING

Ensure that the electricity to the machine is switched off while performing tasks that do not need electricity. Refer to GP 10. Disconnect the power cord. Electricity can cause death or injury. Moving parts can cause injury.

Perform the steps that follow:

1. Switch off, then switch on the machine, GP 10.
2. If the fault persists, enter dC131. Ensure NVM values 700-165, 700-338 and 700-402 are correct. Change the values as necessary.

116-392 Machine Code Check Fail RAP

116-392 Machine code check fail.

Procedure

For information only. No service action necessary.

116-396 FIPS140 Self Test Fail RAP

116-396 At start, the FIPS140 encryption module self-test has detected a failure. Self test error due to illegal ROM (FW).

Procedure

WARNING

Ensure that the electricity to the machine is switched off while performing tasks that do not need electricity. Refer to GP 10. Disconnect the power cord. Electricity can cause death or injury. Moving parts can cause injury.

Perform the steps that follow:

1. Switch off, then switch on the machine, GP 10.
2. Upgrade the software, GP 4.

116-397 Illegal Setting Area Coverage Threshold RAP

116-397 The plain total color judge threshold setting is incorrect.

Procedure

WARNING

Ensure that the electricity to the machine is switched off while performing tasks that do not need electricity. Refer to GP 10. Disconnect the power cord. Electricity can cause death or injury. Moving parts can cause injury.

Perform the steps that follow:

1. Switch off, then switch on the machine, GP 10.
2. Enter dC131. Ensure the value of 720-061 is higher than 720-060. Adjust the values as necessary.

116-399 Initialization RAP

116-399 The machine remains in initializing state even after 10 minutes has passed since it has started up (not including the startup after power save).

Procedure

WARNING

Ensure that the electricity to the machine is switched off while performing tasks that do not need electricity. Refer to GP 10. Disconnect the power cord. Electricity can cause death or injury. Moving parts can cause injury.

Perform the steps that follow:

1. Switch off, then switch on the machine, GP 10.
2. Ensure that all connectors on the ESS PWB, PL 18.1A Item 5 (B400) or PL 18.1B Item 5 (B405) and the MCU PWB, PL 18.2 Item 2 are connected securely. Ensure that all surface-mounted modules on the ESS PWB and MCU PWB are connected securely.
3. Upgrade the software, GP 4.
4. If the fault persists, install a new ESS PWB, PL 18.1A Item 5 (B400) or PL 18.1B Item 5 (B405).

116-701, 116-710 Out of Memory Duplex Fail RAP

116-701 One page data was printed on multiple pages during two sided print.

116-710 HP-GL spool file overflow.

Procedure

Advise the customer that the optional HDD is required.

116-702 Print with Substitute Font RAP

116-702 Printing performed with substitute font.

Procedure

Advise the customer that additional fonts are required.

116-703 Postscript Language RAP

116-703 There is a problem in the PostScript data and an error occurred in PostScript grammar interpretation or language interpretation.

Procedure

Perform the steps that follow:

1. Switch off, then switch on the machine, GP 10.
2. Upgrade the software, GP 4.

116-704 Media Reader RAP

116-704 The MediaLib detected this error while performing the operation that requires access to media.

Procedure

Ensure that all paper trays are loaded with the correct media.

116-705 to 116-709, 716, 717 Media Reader Format RAP

116-705 The MediaLib detected this error while performing the operation that requires access to media.

116-706 The MediaLib detected this error while performing the operation that requires access to media.

116-707 The MediaLib detected this error while performing the operation that requires access to media.

116-708 The MediaLib detected this error while performing the operation that requires access to media.

116-709 The MediaLib detected this error while performing the operation that requires access to media.

116-716 The MediaLib detected this error while performing the operation that requires access to media.

116-717 The MediaLib detected this error while performing the operation that requires access to media.

Procedure

Perform the steps that follow:

1. Have the customer check the contents in the media for errors from the PC:
   a. Check the file format/directory and selected mode (digital camera print/document print).
   b. Check whether the printed file attribute information is displayed.
   c. Check whether the print file images are displayed.
   d. Check whether the printed file attribute information is displayed.
   e. If the fault persists, inform the customer that the media may be defective.
2. If the fault persists, inform the customer that the media may be defective.

116-713, 116-751 HDD Full RAP

116-713 Collate operation was split when HDD full occurred in print service.

116-751 When a Booklet job is writing into the HDD, the job is aborted because the HDD became full

Procedure

Perform the steps that follow:

1. Have the customer:
   a. Delete the stored documents to clear HDD full condition.
   b. Split the job so that HDD full does not occur.
2. If the fault persists, perform the 016-210, 506, 777, 780, 798 HDD Error RAP.

116-714 HP-GL/2 Command Error RAP

116-714 HP-GL/2 command error occurred.

Procedure

Perform the steps that follow:

1. Upgrade the software, GP 4.
2. Perform the 016A Workflow Scanning Error Entry RAP.
3. If the fault persists, perform the 016-210, 506, 777, 780, 798 HDD Error RAP.

116-719 XPIF Parameter Cancelled RAP

116-719 The device was instructed to execute a function it did not support.

Procedure

Advise the customer to cancel the disabled parameters.

116-720 PCL Memory Low Page Simplified RAP

116-720 PCL memory low, page simplified.

Procedure

Advise the customer to:

1. Deactivate the unnecessary ports.
2. Adjust various buffer memory sizes.
3. Add an expanded memory.

116-721 to 116-724, 726, 727, 728 Color Print Permissions RAP

116-721 Color printing is prohibited in this time zone. Output changed to monochrome.

017-722 Color printing prohibited. Output changed to monochrome.

017-723 Color print attempted from a prohibited application. Output changed to monochrome.

017-724 Single sided print attempted from a prohibited application. Output changed to duplex.

017-726 Color, single sided print attempted. Output changed to monochrome, duplex.

017-727 Single sided print attempted. Output changed to duplex.

017-728 Prohibited print attempted. Output changed to acceptable output.

Procedure

Have the customer set the permissions as required.

116-725 HDD Image Log Full RAP

116-725 The log image storage area on the disk is full.

Procedure

Have the customer:

1. Rerun the job.
2. If the situation persists despite re-attempts, delete unnecessary documents saved in the device.

116-738 Size/Orientation Mismatch RAP

017-738 Form overlay is impossible because the size/orientation of the form's drawing is different from that of the paper.

Procedure

Have the customer select paper that has the same size and orientation as the registered form.

116-739, 741, 742, 743 Out of Disk Area RAP

017-739 The form/logo data cannot be registered due to insufficient ram or hard disk space.

017-741 The form data cannot be registered due to the restriction on the no. of forms.

017-742 The logo data cannot be registered due to the restriction on the no. of logos.

017-743 The received data (form/logo) exceeded the registered buffer size.

Procedure

Have the customer delete the unnecessary forms/logos. Otherwise, if not already installed, inform the customer that the optional HDD is required.

116-740 Arithmetic Error RAP

017-740 The value calculated in the interpreter exceeded the limit.

Procedure

Have the customer upgrade the driver.

116-746 Selected Form Not Registered RAP

017-746 The specified form is not registered.

Procedure

Have the customer use a registered form or register the required form.

116-747, 116-748 Invalid Page Data RAP

017-747 After subtracting the paper margin from the valid coordinate area, the result of the calculation will be negative.

017-748 Drawing data does not exist in the page data.

Procedure

Have the customer repeat the operation.

116-749 PostScript Font Error RAP

017-749 Job was aborted because the specified font is not found.

Procedure

Have the customer add the necessary font, or specify a substitute font.

116-750 Banner Sheet Cancelled RAP

017-750 Banner sheet was cancelled.

Procedure

Have the customer set the banner sheet feed tray status to normal or change the banner sheet feed tray.

116-752 Print Job Ticket RAP

116-752 The machine received a print job ticket sent together with a PDF but the job ticket data includes printing instructions that are not supported by the machine.

Procedure

WARNING

Ensure that the electricity to the machine is switched off while performing tasks that do not need electricity. Refer to GP 10. Disconnect the power cord. Electricity can cause death or injury. Moving parts can cause injury.

Perform the steps that follow:

1. Have the customer:
   a. Re-run the job.
   b. Print to a machine that supports the printing instructions.
2. Ensure that all connectors on the ESS PWB, PL 18.1A Item 5 (B400) or PL 18.1B Item 5 (B405) and the MCU PWB, PL 18.2 Item 2 are connected securely. Ensure that all surface-mounted modules on the ESS PWB and MCU PWB are connected securely.
3. Upgrade the software, GP 4.

116-771 to 116-780 Invalid JBIG Parameter RAP

116-771 An incorrect JBIG parameter DL was automatically corrected.

116-772 An incorrect JBIG parameter D was detected and automatically corrected.

116-773 An incorrect JBIG parameter P was detected and automatically corrected.

116-774 An incorrect JBIG parameter YD was detected and automatically corrected.

116-775 An incorrect JBIG parameter L0 was detected and automatically corrected.

116-776 An incorrect JBIG parameter MX was detected and automatically corrected.

116-777 An incorrect JBIG parameter MY was detected and automatically corrected.

116-778 An incorrect JBIG parameter VLENGTH was detected and automatically corrected.

116-780 The system detected an error in the document attached to the E-mail to XXX

Procedure

For information only. No service action necessary.

117-310 WSD Scan S/W Fail RAP

117-310 A problem occurred in the processing of WSD scan service software, causing the processing to discontinue.

Procedure

WARNING

Ensure that the electricity to the machine is switched off while performing tasks that do not need electricity. Refer to GP 10. Disconnect the power cord. Electricity can cause death or injury. Moving parts can cause injury.

Perform the steps that follow:

1. Switch off, then switch on the machine, GP 10.
2. Perform OF 3 Special Boot Modes RAP.
3. Ensure that all connectors on the ESS PWB, PL 18.1A Item 5 (B400) or PL 18.1B Item 5 (B405) and the MCU PWB, PL 18.2 Item 2 are connected securely. Ensure that all surface-mounted modules on the ESS PWB and MCU PWB are connected securely.
4. Upgrade the software, GP 4.
5. If the fault persists, install a new ESS PWB, PL 18.1A Item 5 (B400) or ESS PWB, PL 18.1B Item 5 (B405).

117-311 Incorrect Installation of Security Enhancement Kit RAP

117-311 The security enhancement kit is installed in the incorrect slot.

Procedure

WARNING

Ensure that the electricity to the machine is switched off while performing tasks that do not need electricity. Refer to GP 10. Disconnect the power cord. Electricity can cause death or injury. Moving parts can cause injury.

Perform the steps that follow:

1. Install the security enhancement kit into the correct slot.

117-312 Device Self Test Error RAP

117-312 In an OS self program determination test, it was detected that the checksum value and the mini OS/program were different.

Procedure

WARNING

Ensure that the electricity to the machine is switched off while performing tasks that do not need electricity. Refer to GP 10. Disconnect the power cord. Electricity can cause death or injury. Moving parts can cause injury.

Perform the steps that follow:

1. Upgrade the software, GP 4.
2. If the fault persists, install a new ESS PWB, PL 18.1A Item 5 (B400) or ESS PWB, PL 18.1B Item 5 (B405).

117-313, 117-314 Geographic Region Change Fail RAP

117-313 The geographic region change command from the PJL can not be implemented.

117-314 The contract type change command from the PJL can not be implemented.

Procedure

WARNING

Ensure that the electricity to the machine is switched off while performing tasks that do not need electricity. Refer to GP 10. Disconnect the power cord. Electricity can cause death or injury. Moving parts can cause injury.

Perform the steps that follow:

1. Switch off, then switch on the machine, GP 10.
2. Ensure that all connectors on the ESS PWB, PL 18.1A Item 5 (B400) or PL 18.1B Item 5 (B405) and the MCU PWB, PL 18.2 Item 2 are connected securely. Ensure that all surface-mounted modules on the ESS PWB and MCU PWB are connected securely.
3. Upgrade the software, GP 4.
4. If the fault persists, install a new ESS PWB, PL 18.1A Item 5 (B400) or ESS PWB, PL 18.1B Item 5 (B405).

117-315 Contract Type/Geographic Region Changed RAP

117-315 The geographic region and contract type change command from the PJL was implemented.

Procedure

Have the customer install the correct CRUs for the changed geographic region and contract type.

117-316 Contract Manager Software Fail RAP

117-316 When the contract manager is running, it can no longer perform task control due to software malfunction.

Procedure

Perform the steps that follow:

1. Switch off, then switch on the machine, GP 10.
2. If the fault persists, upgrade the software, GP 4.

117-317, 117-318 Contract Manager PPP RAP

117-317 The contract manager detected that the PPP contract has ended.

117-318 The contract manager detected that the DC command write that was performed at the end of a PPP contract has failed.

Procedure

Advise the customer to wait for the machine to reboot.

117-319 EMMC Card Program or Font Data Access RAP

117-319 EMMC card program or font data access fail.

Procedure

WARNING

Ensure that the electricity to the machine is switched off while performing tasks that do not need electricity. Refer to GP 10. Disconnect the power cord. Electricity can cause death or injury. Moving parts can cause injury.

Perform the steps that follow:

1. Switch off, then switch on the machine, GP 10.
2. Perform OF 3 Special Boot Modes RAP.
3. Ensure that all connectors on the ESS PWB, PL 18.1A Item 5 (B400) or PL 18.1B Item 5 (B405) and the MCU PWB, PL 18.2 Item 2 are connected securely. Ensure that all surface-mounted modules on the ESS PWB and MCU PWB are connected securely.
4. Upgrade the software, GP 4.
5. If the fault persists, install a new ESS PWB, PL 18.1A Item 5 (B400) or ESS PWB, PL 18.1B Item 5 (B405).

117-320 to 117-324, 327, 329, 338 EMMC Card Fail RAP

117-320 When starting, the EMMC card hardware error was detected by SysCheckSD.

117-321 When starting, the installed EMMC card was detected to be unsupported by SysCheckSD.

117-322 When starting, EMMC encryption error was detected by SysCheckSD.

117-323 When starting, EMMC card file system access error was detected by SysCheckSD.

117-324 When the OS is starting up, the system detected that the EMMC card is meant for another product and an error is issued.

117-327 Hardware fault processing of NVRAM area/access on the EMMC card.

117-329 When starting up, the EMMC card was detected to be not connected by the OS or SysCheckSD.

117-338 Fault in the connection with EMMC card is detected by the controller.

Procedure

WARNING

Ensure that the electricity to the machine is switched off while performing tasks that do not need electricity. Refer to GP 10. Disconnect the power cord. Electricity can cause death or injury. Moving parts can cause injury.

Perform the steps that follow:

1. Ensure the EMMC card, PL 18.1A Item 6 (B400) or PL 18.1B Item 6 (B405) is the correct variant for the machine and securely installed.
2. Perform OF 3 Special Boot Modes RAP.
3. Switch off, then switch on the machine, GP 10.
4. Ensure that all connectors on the ESS PWB, PL 18.1A Item 5 (B400) or PL 18.1B Item 5 (B405) and the MCU PWB, PL 18.2 Item 2 are connected securely. Ensure that all surface-mounted modules on the ESS PWB and MCU PWB are connected securely.
5. **(117-323 Only).** If installed, initialise the HDD, refer to dC355 Hard Disk Diagnostics.
6. **(117-327 Only).** Initialize the NVM, refer to dC301 NVM Initialization.

   NOTE: *Inform the customer that this will clear all address information.*

7. Upgrade the software, GP 4.
8. If the fault persists, install new components as necessary:
   - EMMC card, PL 18.1A (B400) or PL 18.1B Item 6 (B405).
   - ESS PWB, PL 18.1A Item 5 (B400) or ESS PWB, PL 18.1B Item 5 (B405).

117-325, 117-326 Access Fail RAP

117-325 Failed to obtain RTC timer value due to hardware problem in the contract function.

117-326 Software fault processing of NVRAM area/access.

Procedure

Switch off, then switch on the machine, GP 10.

117-330 XBDS Soft Fail RAP

117-330 An Ethernet error was detected.

Procedure

WARNING

Ensure that the electricity to the machine is switched off while performing tasks that do not need electricity. Refer to GP 10. Disconnect the power cord. Electricity can cause death or injury. Moving parts can cause injury.

Perform the steps that follow:

1. Switch off, then switch on the machine, GP 10.
2. Have the customer check whether HTTP and HTTPS have started up normally and are operable.
3. Have the customer check that the TCP/IP ports are correctly configured.
4. Ensure that all connectors on the ESS PWB, PL 18.1A Item 5 (B400) or PL 18.1B Item 5 (B405) and the MCU PWB, PL 18.2 Item 2 are connected securely. Ensure that all surface-mounted modules on the ESS PWB and MCU PWB are connected securely.
5. Upgrade the software, GP 4.
6. Perform the 016A Workflow Scanning Error Entry RAP.
7. If the fault persists, install a new ESS PWB, PL 18.1A Item 5 (B400) or ESS PWB, PL 18.1B Item 5 (B405).

117-331, 117-355 Uninitialized HDD RAP

117-331 An uninitialized HDD that was used for another device was recognized.

117-355 HDD is not recognized in this startup.

Procedure

Perform the 016-210, 506, 777, 780, 798 HDD Error RAP.

117-332, 117-335 Uninitialized Used NVM RAP

117-332 An uninitialized NVM that was used for another device was recognized.

117-335 Invalid NVM detection.

Procedure

To initialize the NVM, perform dC301 NVM Initialization.

117-333 Uninitialized Used EMMC Card RAP

117-333 An uninitialized EMMC card that was used for another device was detected.

Procedure

To initialize the eMMC, perform the procedure GP 25 Special Boot Modes “Storage Device Initialize Mode”.

117-336, 117-337 PCI Not Supported Fail RAP

117-336 An unknown PCI option was detected.

117-337 An unknown PCIEX option was detected.

Procedure

Install a new ESS PWB, PL 18.1A Item 5 (B400) or ESS PWB, PL 18.1B Item 5 (B405).

117-339 NVM Backup Fail RAP

117-339 NVM backup is not carried out fail.

Procedure

Initialise the HDD, refer to dC355 Hard Disk Diagnostics.

117-340, 117-342 Other HDD Fail RAP

117-340 A hard disk that was formatted by another machine was detected.

117-342 Storage device incorrect-exchanged fault.

Procedure

WARNING

Ensure that the electricity to the machine is switched off while performing tasks that do not need electricity. Refer to GP 10. Disconnect the power cord. Electricity can cause death or injury. Moving parts can cause injury.

Perform the steps that follow:

1. Install a new HDD, PL 18.1A Item 91 (B400) or PL 18.1B Item 91 (B405).
2. If the fault persists:
   a. Switch off, then switch on the machine, GP 10.
   b. Ensure that all connectors on the ESS PWB, PL 18.1A Item 5 (B400) or PL 18.1B Item 5 (B405) and the MCU PWB, PL 18.2 Item 2 are connected securely. Ensure that all surface-mounted modules on the ESS PWB and MCU PWB are connected securely.
   c. Upgrade the software, GP 4.
   d. Install a new ESS PWB, PL 18.1A Item 5 (B400) or ESS PWB, PL 18.1B Item 5 (B405).

117-343 Log Sending Parameter Fail RAP

117-343 An incorrect setting of the log transfer function was detected:

1. When the image log function is disabled and the auto transfer function is enabled, transfer in job units is set.
2. When the job log auto transfer function is disabled (no hard disk), the auto transfer function of the log is set to enabled.

Procedure

WARNING

Ensure that the electricity to the machine is switched off while performing tasks that do not need electricity. Refer to GP 10. Disconnect the power cord. Electricity can cause death or injury. Moving parts can cause injury.

Perform the steps that follow:

1. Have the customer change the settings of the log transfer function:
   - For detection condition 1, change the operation method for Log Auto Transfer to anything other than Transfer in Job Units.
   - For detection condition 2, check whether a hard disk is installed or change the Auto Transfer function of the log to disable it.
2. Perform OF 3 Special Boot Modes RAP.
3. Upgrade the software, GP 4.
4. If the fault persists, install a new ESS PWB, PL 18.1A Item 5 (B400) or ESS PWB, PL 18.1B Item 5 (B405).

117-344 Invalid User Job Type Fail RAP

117-344 The applicable user job cannot be executed at the system level.

Procedure

Have the customer check if public print it is set to be stored as charge print.

117-345 SSMM Batch Setting Duration Fail RAP

117-345 During the batch setting of LoDeM, a reboot occurred due to a change in system data.

Procedure

WARNING

Ensure that the electricity to the machine is switched off while performing tasks that do not need electricity. Refer to GP 10. Disconnect the power cord. Electricity can cause death or injury. Moving parts can cause injury.

1. For a single occurrence, take no action.
2. If the fault persists, perform the steps that follow:
   a. Switch off, then switch on the machine, GP 10.
   b. Perform OF 3 Special Boot Modes RAP.
   c. Ensure that all connectors on the ESS PWB, PL 18.1A Item 5 (B400) or PL 18.1B Item 5 (B405) and the MCU PWB, PL 18.2 Item 2 are connected securely. Ensure that all surface-mounted modules on the ESS PWB and MCU PWB are connected securely.
   d. Upgrade the software, GP 4.
   e. If the fault persists, install a new ESS PWB, PL 18.1A Item 5 (B400) or ESS PWB, PL 18.1B Item 5 (B405).

117-347, 349, 350 Service Fail RAP

117-347 When the SEEP extension billing counter have been used and billing count cannot be performed as new extension counter cannot be obtained.

117-349 Detects this fail when enters a state where it is unable to continue operating as GRS.

117-350 A problem has occurred in the AirPrint scan service software processing and it is unable to continue with the subsequent processes.

Procedure

WARNING

Ensure that the electricity to the machine is switched off while performing tasks that do not need electricity. Refer to GP 10. Disconnect the power cord. Electricity can cause death or injury. Moving parts can cause injury.

Perform the steps that follow:

1. Switch off, then switch on the machine, GP 10.
2. Perform OF 3 Special Boot Modes RAP.
3. Ensure that all connectors on the ESS PWB, PL 18.1A Item 5 (B400) or PL 18.1B Item 5 (B405) and the MCU PWB, PL 18.2 Item 2 are connected securely. Ensure that all surface-mounted modules on the ESS PWB and MCU PWB are connected securely.
4. Upgrade the software, GP 4.
5. If the fault persists, install a new ESS PWB, PL 18.1A Item 5 (B400) or ESS PWB, PL 18.1B Item 5 (B405).

117-348 Uninitialized Used EMMC Card RAP

117-348 An un-initialized EMMC card that had been used in another device was recognized.

Procedure

WARNING

Ensure that the electricity to the machine is switched off while performing tasks that do not need electricity. Refer to GP 10. Disconnect the power cord. Electricity can cause death or injury. Moving parts can cause injury.

Perform the steps that follow:

1. Switch off, then switch on the machine, GP 10.
2. Initialize the NVM, perform dC301 NVM Initialization.
3. Ensure that all connectors on the ESS PWB, PL 18.1A Item 5 (B400) or PL 18.1B Item 5 (B405) and the MCU PWB, PL 18.2 Item 2 are connected securely. Ensure that all surface-mounted modules on the ESS PWB and MCU PWB are connected securely.
4. Upgrade the software, GP 4.
5. If the fault persists, install a new ESS PWB, PL 18.1A Item 5 (B400) or ESS PWB, PL 18.1B Item 5 (B405).

117-354, 356, 358 Job Limit System Fail RAP

117-354 Before Job execution, an error occurs in Coml_SsmiIsJoblimit.

117-356 During Job estimate acquisition, an error occurs.

117-358 Fatal error of JAL relationship in software processing.

Procedure

Switch off, then switch on the machine, GP 10.

117-360 Date Limit Exceeding Fail RAP

117-360 Date limit exceeded.

Procedure

Have the customer set the correct time and date.

117-362, 117-363 USB Dongle Fail RAP

117-362 During the initial installation by USB dongle, it fails to set the TSC contract mode.

117-363 During the initial installation by USB dongle, it fails to set the count-up mode.

Procedure

Perform the steps that follow:

1. Switch off, then switch on the machine, GP 10.
2. Ensure the correct USB dongle is installed.

117-364 Encryption Key Fail RAP

117-364 TPM encryption key data corrupted.

Procedure

Perform the steps that follow:

1. Switch off, then switch on the machine, GP 10. If the fault persists, switch off, then switch on the machine a second time.
2. If the fault still persists, perform dC305 Initialize Hard Disk.

117-365 WiFi Diagnostic Fail RAP

117-365 Error during WiFi diagnostics test.

Procedure

Perform the steps that follow:

1. Switch off, then switch on the machine, GP 10.
2. Ensure that the wireless adaptor, PL 18.1A Item 90 (B400) or PL 18.1B Item 90 (B405) is connected securely.
3. If the fault persists install a new wireless adaptor, PL 18.1A Item 90 (B400) or PL 18.1B Item 90 (B405).

118-310, 118-311 Internal Fail RAP

118-310 An internal error was detected during initialization of the IPSEC.

118-311 GCP related fatal error.

Procedure

WARNING

Ensure that the electricity to the machine is switched off while performing tasks that do not need electricity. Refer to GP 10. Disconnect the power cord. Electricity can cause death or injury. Moving parts can cause injury.

Perform the steps that follow:

1. Switch off, then switch on the machine, GP 10.
2. Perform OF 3 Special Boot Modes RAP.
3. Ensure that all connectors on the ESS PWB, PL 18.1A Item 5 (B400) / PL 18.1B Item 5 (B405), are securely connected. Ensure all surface mounted modules on the ESS PWB are securely connected.
4. Reload the software, GP 4.
5. If the fault persists, install a new ESS PWB, PL 18.1A Item 5 (B400) / PL 18.1B Item 5 (B405).

121-310, 327 EPSV-Accessory Communication Fail RAP

121-310 Transmission has failed between the EP-SV and the accessories.

121-327 EPSV accessory not in service fail.

Procedure

For information only, no service action necessary.

121-311, 312, 313 IC Card Auditron Password Fail RAP

121-311 IC card auditron config fail 01.

121-312 IC card auditron config fail 02.

121-313 IC card auditron config fail 03.

Procedure

For information only, no service action necessary.

121-314 Customize User Prompts Fail RAP

121-314 Customize user prompts fail.

Procedure

For information only, no service action necessary.

121-316 Accessory Conflict RAP

121-316 Prohibited combination of EP accessory connection and secure access authentication.

Procedure

WARNING

Ensure that the electricity to the machine is switched off while performing tasks that do not need electricity. Refer to GP 10. Disconnect the power cord. Electricity can cause death or injury. Moving parts can cause injury.

Perform the steps that follow:

1. Disconnect the FDI accessory.
2. Set the authentication method to an option other than Secure Access (either Authentication Off, Local Authentication or Remote Authentication).
3. Reconnect the FDI accessory.

121-317 Continuous Job Setting Mismatch RAP

121-317 Prohibited combination of EP accessory connection and secure access authentication.

Procedure

For information only. No service actions necessary.

121-318 Auth/Account Settings Not Supported RAP

121-318 Auth/account settings not supported.

Procedure

For information only. No service actions necessary.

121-319 Fax Send Charging and Internet Fax Setting Confliction RAP

121-319 Fax send charging and internet fax setting conflict.

Procedure

Have the customer disable the fax send billing function or the internet fax kit functions. Switch off, then switch on the machine, GP 10.

121-322 Controller Price Table Error RAP

121-322 EPA - controller unit price table settings error.

Procedure

For information only. No service actions necessary.

121-323 Web EP Software Fail RAP

121-323 Fatal error related to Web EP.

Procedure

Switch off, then switch on the machine. GP 10.

121-324 Fax Send Charging Confliction RAP

121-317 It is detected that with fax send charging enabled, blank document detection is enabled or blank document detection display (display on KO screen) is enabled.

Procedure

For information only. No service actions necessary.

121-325 ICCR and Panel Setting Confliction RAP

121-325 ICCR and panel auth setting confliction.

Procedure

For information only. No service actions necessary.

121-328 to 121-332, 341, 342, 343 EP Communication Fail RAP

117-328 Cannot detect the connection of related products or there is no response from the transmission path, or protocol error.

117-329 A communications error was detected during transmission of the message change answer.

117-330 The disconnect boot of related products in the product is not the correct specification.

117-331 Related products settings contradiction.

117-332 The wake command from this machine to related products has elapsed.

117-341 Undefined accessory information was detected in the wake up answer message.

117-342 fatal error of related products in the job disable message.

117-343 fatal error of related products in the accessory status message.

Procedure

For information only. No service actions necessary.

121-339 Price Table Error RAP

117-339 EPA unit price table error.

Procedure

For information only. No service actions necessary.

121-340 EP Accessory MisMatch RAP

117-340 The combination of accessories that are installed does not match the specifications.

Procedure

For information only. No service actions necessary.

123-310 to 123-353 UI Error 1 RAP

123-310 The data sent from the UI to the controller exceeded the upper limit for the processing capability.

123-311 The data received from the controller exceeded the upper limit for the processing capability in the UI.

123-312 The data received from the controller has exceeded the upper limit of the processing capability in the UI.

123-325 The specified UI internal object could not be created due to a setting/specification error. UI-SW failure in the ESS PWB.

123-326 The memory in the GUAM exceeded the upper limit.

123-333 The H/W connection in the UI is faulty or the internal connection could not be correctly detected.

123-343 UI-SW failure in the ESS PWB.

123-344 UI-SW failure in the ESS PWB.

123-350 MCW panel one-touch key fail.

123-352 An error internal to the con-panel (an abnormal value in EEPROM for Sys) has been detected.

123-353 The control panel has detected that the UI cable is disconnected.

Procedure

Perform the 002-500 UI Error RAP.

123-354 to 123-381 UI Error 2 RAP

123-354 The control panel has detected a drop in +24V power voltage.

123-355 The control panel has detected a drop in +5V power voltage.

123-356 The control panel has detected that FFC is disconnected from one touch key for fax or that one touch key has a problem.

123-357 The control panel has detected that writing in the EEPROM has failed.

123-358 The control panel has detected that writing in the EEPROM for logging failed.

123-362 UI-SW failure in the ESS PWB.

123-368 There is insufficient memory or the connection failed.

123-369 UI-SW failure in the ESS PWB.

123-371 The parameter sent from the controller was incorrect.

123-374 The job ID parameter sent from the controller was incorrect.

123-377 UI-SW failure in the ESS PWB.

123-379 UI-SW failure in the ESS PWB.

123-380 UI-SW failure in the ESS PWB.

123-381 UI-SW failure in the ESS PWB.

Procedure

Perform the 002-500 UI Error RAP.

123-382 to 123-399 UI Error 3 RAP

123-382 UI-SW failure in the ESS PWB.

123-383 UI-SW failure in the ESS PWB.

123-384 UI-SW failure in the ESS PWB.

123-389 UI-SW failure in the ESS PWB.

123-390 UI-SW failure in the ESS PWB.

123-392 UI-SW failure in the ESS PWB.

123-393 UI-SW failure in the ESS PWB.

123-395 UI-SW failure in the ESS PWB.

123-396 UI-SW failure in the ESS PWB.

123-397 UI-SW failure in the ESS PWB.

123-398 UI-SW failure in the ESS PWB.

123-399 UI-SW failure in the ESS PWB.

Procedure

Perform the 002-500 UI Error RAP.

124-310, 311, 314, 316, 318, 322, 324, 340 344, 360 DC132 Error RAP

124-310 Product number not specified.

124-311 Serial number not specified.

124-314 Stored data mismatch.

124-316 Stored data mismatch.

124-318 Stored data mismatch.

124-322 Stored data mismatch.

124-324 All billing counter mismatch.

124-340 All three CRUM destinations are not set (0 or different values are set).

124-344 All the billing meter types kept at multiple locations are different.

124-360 All three CRUM enable/disable settings are not set (0 or different values are set).

Procedure

WARNING

Ensure that the electricity to the machine is switched off while performing tasks that do not need electricity. Refer to GP 10. Disconnect the power cord. Electricity can cause death or injury. Moving parts can cause injury.

Perform the steps that follow:

1. Switch off, then switch on the machine, GP 10.
2. Ensure that all connectors on the MCU PWB, PL 18.2 Item 2 and the ESS PWB, PL 18.1A Item 5 (B400), or PL 18.1B Item 5 (B405) are connected securely. Ensure all surface-mounted modules on both PWBs are connected securely.

CAUTION

When installing a new ESS PWB and a new MCU PWB at the same time, first install the new ESS PWB, by following REP 18.1 (B405), REP 18.2 (B400). If the new ESS PWB installation is successful switch off the machine, GP 10 then install the new MCU PWB.

3. If the fault persists, install a new:
   - ESS PWB, PL 18.1A Item 5 (B400) or PL 18.1B Item 5 (B405).
   - MCU PWB, PL 18.2 Item 2

   NOTE: *If the fault persists after startup, perform dC132 to verify all numbers match. Go to Serial Number Re-Synchronization in GSN (Library 1503).*

124-312, 313, 356, 357 DC132 Error 10 and 12 RAP

124-312 Stored data mismatch. The product number did not match.

124-313 Stored data mismatch. The serial numbers do not match.

124-356 Serial number 1 point mismatch.

124-357 Product number 1 point mismatch.

Procedure

WARNING

Ensure that the electricity to the machine is switched off while performing tasks that do not need electricity. Refer to GP 10. Disconnect the power cord. Electricity can cause death or injury. Moving parts can cause injury.

Switch off, then switch on the machine, GP 10. **The fault persists.**

Y **N**

Perform SCP 5 Final Actions.

Enter dC132 Device ID and Billing Data. **One of the three product numbers is different.**

Y **N**

Go to Serial Number Re-Synchronization in GSN (Library 1503).

Perform dC132 to make all three values the same.

124-315, 317, 355 DC132 Error 02, 04 and 14 RAP

124-315 Stored data mismatch. Internal control error was detected.

124-317 Stored data mismatch. Internal control error was detected.

124-355 At least one set of territory information at the 3 locations is different.

Procedure

WARNING

Ensure that the electricity to the machine is switched off while performing tasks that do not need electricity. Refer to GP 10. Disconnect the power cord. Electricity can cause death or injury. Moving parts can cause injury.

Switch off, then switch on the machine, GP 10. **The fault persists.**

Y **N**

Perform SCP 5 Final Actions.

Enter dC131. Compare NVM values 700-600, 700-601, and 700-602. **One of the three values is different.**

Y **N**

Go to Serial Number Re-Synchronization in GSN (Library 1503).

Perform dC132 to make all three values the same.

124-319 DC132 Error 08 RAP

124-319 Stored data mismatch. Internal control error was detected.

Procedure

WARNING

Ensure that the electricity to the machine is switched off while performing tasks that do not need electricity. Refer to GP 10. Disconnect the power cord. Electricity can cause death or injury. Moving parts can cause injury.

Switch off, then switch on the machine, GP 10. **The fault persists.**

Y **N**

Perform SCP 5 Final Actions.

Enter dC131. Compare NVM values 700-606, 700-607, and 700-608. **One of the three values is different.**

Y **N**

Go to Serial Number Re-Synchronization in GSN (Library 1503)

Perform dC132 to make all three values the same.

124-320 SEEPROM Fail RAP

124-320 Write error occurred in the SEEPROM on the ESS PWB.

Procedure

WARNING

Ensure that the electricity to the machine is switched off while performing tasks that do not need electricity. Refer to GP 10. Disconnect the power cord. Electricity can cause death or injury. Moving parts can cause injury.

Perform the steps that follow:

1. Switch off, then switch on the machine, GP 10.
2. Ensure that all connectors and surface-mounted modules on the ESS PWB, PL 18.1A Item 5 (B400) or PL 18.1B Item 5 (B405) are connected securely.
3. Upgrade the software, GP 4.
4. Perform GP 25, Function 03. NVRAM INIT MODE.

CAUTION

When installing a new ESS PWB and a new MCU PWB at the same time, first install the new ESS PWB, by following REP 18.1 (B405), REP 18.2 (B400). If the new ESS PWB installation is successful switch off the machine, GP 10 then install the new MCU PWB.

6. If the fault persists, install a new:
   - ESS PWB, PL 18.1A Item 5 (B400) or PL 18.1B Item 5 (B405).
   - MCU PWB, PL 18.2 Item 2.

   NOTE: *If the fault persists after startup, perform dC132 to verify all numbers match. Go to Serial Number Re-Synchronization in GSN (Library 1503).*

124-321 Backup SRAM Fail RAP

124-321 Write error occurred in the NVM on the ESS PWB.

Procedure

WARNING

Ensure that the electricity to the machine is switched off while performing tasks that do not need electricity. Refer to GP 10. Disconnect the power cord. Electricity can cause death or injury. Moving parts can cause injury.

Perform the steps that follow:

1. Switch off, then switch on the machine, GP 10.
2. Ensure that all connectors and surface-mounted modules on the ESS PWB, PL 18.1A Item 5 (B400) or PL 18.1B Item 5 (B405) are connected securely.
3. Ensure that the fax PWB, PL 18.1B Item 15 is installed correctly.
4. Upgrade the software, GP 4.
5. Perform GP 25, Function 03. NVRAM INIT MODE.

CAUTION

When installing a new ESS PWB and a new MCU PWB at the same time, first install the new ESS PWB, by following REP 18.1 (B405), REP 18.2 (B400). If the new ESS PWB installation is successful switch off the machine, GP 10 then install the new MCU PWB.

6. If the fault persists, install a new:
   - ESS PWB, PL 18.1A Item 5 (B400) or PL 18.1B Item 5 (B405).
   - MCU PWB, PL 18.2 Item 2.

   NOTE: *If the fault persists after startup, perform dC132 to verify all numbers match. Go to Serial Number Re-Synchronization in GSN (Library 1503).*

124-323 DC132 06 RAP

124-323 Internal control error was detected.

Procedure

WARNING

Ensure that the electricity to the machine is switched off while performing tasks that do not need electricity. Refer to GP 10. Disconnect the power cord. Electricity can cause death or injury. Moving parts can cause injury.

Switch off, then switch on the machine, GP 10. **The fault persists.**

Y **N**

Perform SCP 5 Final Actions.

Enter dC131. Compare NVM values 700-603, 700-604, and 700-605. **One of the three values is different.**

Y **N**

Go to Serial Number Re-Synchronization in GSN (Library 1503).

Perform dC132 to make all three values the same.

124-325 Billing Restoration Fail RAP

124-325 Billing counter mismatch (1 position).

Procedure

WARNING

Ensure that the electricity to the machine is switched off while performing tasks that do not need electricity. Refer to GP 10. Disconnect the power cord. Electricity can cause death or injury. Moving parts can cause injury.

Switch off, then switch on the machine, GP 10. **The fault persists.**

Y **N**

Perform SCP 5 Final Actions.

Enter dC132 Device ID and Billing Data. **One of the three values is different.**

Y **N**

Go to Serial Number Re-Synchronization in GSN (Library 1503).

Perform dC132 to make all three values the same.

124-326 IOT Speed Not Registered RAP

124-326 IOT Speed not registered.

Procedure

Advise the customer to follow the instructions on the UI to enter the SW key for changing IOT speed.

124-327 IOT Speed Change Fail RAP

124-327 A SW error was detected during the procedure for changing IOT speed.

Procedure

WARNING

Ensure that the electricity to the machine is switched off while performing tasks that do not need electricity. Refer to GP 10. Disconnect the power cord. Electricity can cause death or injury. Moving parts can cause injury.

Perform the steps that follow:

1. Switch off, then switch on the machine, GP 10.
2. Ensure that all connectors on the ESS PWB, PL 18.1A Item 5 (B400) or PL 18.1B Item 5 (B405) and the MCU PWB, PL 18.2 Item 2 are connected securely. Ensure all surface-mounted modules on the ESS PWB and MCU PWB are connected securely.
3. Upgrade the software, GP 4.
4. Perform GP 25, Function 03. NVRAM INIT MODE.

CAUTION

When installing a new ESS PWB and a new MCU PWB at the same time, first install the new ESS PWB, by following REP 18.1 (B405), REP 18.2 (B400). If the new ESS PWB installation is successful switch off the machine, GP 10 then install the new MCU PWB.

5. If the fault persists, install a new:
   - ESS PWB, PL 18.1A Item 5 (B400) or PL 18.1B Item 5 (B405).
   - MCU PWB, PL 18.2 Item 2

   NOTE: *If the fault persists after startup, perform dC132 to verify all numbers match. Go to Serial Number Re-Synchronization in GSN (Library 1503).*

124-328 Punch Unit User Initial Set Up RAP

124-328 Punch unit user initial installation screen displayed.

Procedure

For information only. No service actions necessary.

124-331 to 124-339 ESS ROM DIMM RAP

124-331 The system detected that the ESS ROM DIMM #1 was not installed.

124-333 An error was detected in the Panther.

124-334 An error was detected in the standard built-in font ROM.

124-335 The installation of the font ROM was not detected.

124-337 An error was detected in the ESS built-in standard RAM.

124-338 The system detected that a duplicate font ROM was installed.

124-339 The system detected that the ROM DIMM for another model was installed.

Procedure

WARNING

Ensure that the electricity to the machine is switched off while performing tasks that do not need electricity. Refer to GP 10. Disconnect the power cord. Electricity can cause death or injury. Moving parts can cause injury.

Perform the steps that follow:

1. Switch off, then switch on the machine, GP 10.
2. If the fault persists, upgrade the software, GP 4.

124-341, 351, 361, 381, 391 CRUM Market Fail MCU RAP

124-341 One of CRUM destinations is different from the others (IOT).

124-351 One of CRUM OEM destinations is different from the others (IOT).

124-361 One of CRUM Enable/Disable settings is different from the others (IOT).

124-381 One of CRUM destinations is different from the others (IOT).

124-391 One of CRUM OEM destinations is different from the others (IOT).

Procedure

WARNING

Ensure that the electricity to the machine is switched off while performing tasks that do not need electricity. Refer to GP 10. Disconnect the power cord. Electricity can cause death or injury. Moving parts can cause injury.

Perform the steps that follow:

1. Switch off, then switch on the machine, GP 10.
2. Enter dC132 Device ID and Billing Data. Make all three values the same.
3. If the fault persists, install a new MCU PWB, PL 18.2 Item 2,

124-342, 343, 352, 353, 362, 363, 382, 383, 392, 393 CRUM Market Fail SYS 1 RAP

124-342 One of CRUM destinations is different from the others (SYS 1).

124-343 One of CRUM destinations is different from the others (SYS 2).

124-352 One of CRUM OEM destinations is different from the others (SYS 1).

124-353 One of CRUM OEM destinations is different from the others (SYS 2).

124-362 One of CRUM enable/disable settings is different from the others (SYS 1).

124-363 One of CRUM enable/disable settings is different from the others (SYS 2).

124-382 One of CRUM destinations is different from the others (SYS 1).

124-383 One of CRUM destinations is different from the others (SYS 2).

124-392 One of CRUM OEM destinations is different from the others (SYS 1).

124-393 One of CRUM OEM destinations is different from the others (SYS 2).

Procedure

WARNING

Ensure that the electricity to the machine is switched off while performing tasks that do not need electricity. Refer to GP 10. Disconnect the power cord. Electricity can cause death or injury. Moving parts can cause injury.

Switch off, then switch on the machine, GP 10. **The fault persists.**

Y **N**

Perform SCP 5 Final Actions.

Enter dC132 Device ID and Billing Data. Make all three product numbers the same. **The fault persists.**

Y **N**

Perform SCP 5 Final Actions.

Remove, then reinstall the EMMC card, PL 18.1A Item 6 (B400) or PL 18.1B Item 6 (B405). **The fault persists.**

Y **N**

Perform SCP 5 Final Actions.

Install a new EMMC card, PL 18.1A Item 6 (B400) or PL 18.1B Item 6 (B405). **The fault persists.**

Y **N**

Perform SCP 5 Final Actions.

Perform GP 25, Function 03. NVRAM INIT MODE. Install a new:

- ESS PWB, PL 18.1A Item 5 (B400) or PL 18.1B Item 5 (B405).
- MCU PWB, PL 18.2 Item 2.

NOTE: *Never install a new MCU PWB and ESS PWB at the same time. When installing a new MCU PWB and ESS PWB are required, install the new ESS PWB then switch on the machine, GP 10. After a successful restart, a new MCU PWB can be installed.*

124-344, 346, 348 Information Mismatch RAP

124-344 Billing count type fail (all the three are different from each other).

124-346 Billing count type fail (all the three are different from each other).

124-348 Modal break point fail (all the three are different from each other).

Procedure

WARNING

Ensure that the electricity to the machine is switched off while performing tasks that do not need electricity. Refer to GP 10. Disconnect the power cord. Electricity can cause death or injury. Moving parts can cause injury.

Switch off, then switch on the machine, GP 10. **The fault persists.**

Y **N**

Perform SCP 5 Final Actions.

Enter dC132 Device ID and Billing Data. Make all three product numbers the same. **The fault persists.**

Y **N**

Perform SCP 5 Final Actions.

Install a new MCU PWB, PL 18.2 Item 2. **The fault persists.**

Y **N**

Perform SCP 5 Final Actions.

Re-install the original MCU PWB and perform GP 25, Function 03. NVRAM INIT MODE. **The fault persists.**

Y **N**

Perform SCP 5 Final Actions.

Install a new ESS PWB, PL 18.1A Item 5 (B400) or PL 18.1B Item 5 (B405).

NOTE: *Never install a new MCU PWB and ESS PWB at the same time. When installing a new MCU PWB and ESS PWB are required, install the new ESS PWB then switch on the machine, GP 10. After a successful restart, a new MCU PWB can be installed.*

124-345 Billing Meter Type Restoration Fail RAP

124-345 Billing meter type fail (one mismatches the others but cannot be automatically repaired.)

Procedure

WARNING

Ensure that the electricity to the machine is switched off while performing tasks that do not need electricity. Refer to GP 10. Disconnect the power cord. Electricity can cause death or injury. Moving parts can cause injury.

Switch off, then switch on the machine, GP 10. **The fault persists.**

Y **N**

Perform SCP 5 Final Actions.

Enter dC131. Compare NVM values 720-002 and 720-062. **Both values are different.**

Y **N**

Perform SCP 5 Final Actions.

Install a new MCU PWB, PL 18.2 Item 2. **The fault persists.**

Y **N**

Perform SCP 5 Final Actions.

Re-install the original MCU PWB and perform GP 25, Function 03. NVRAM INIT MODE. **The fault persists.**

Y **N**

Perform SCP 5 Final Actions.

Install a new ESS PWB, PL 18.1A Item 5 (B400) or PL 18.1B Item 5 (B405).

NOTE: *Never install a new MCU PWB and ESS PWB at the same time. When installing a new MCU PWB and ESS PWB are required, install the new ESS PWB then switch on the machine, GP 10. After a successful restart, a new MCU PWB can be installed.*

124-347 Billing CountType Restoration Fail RAP

124-347 Billing count type fail (one mismatches the others but cannot be automatically repaired.)

Procedure

WARNING

Ensure that the electricity to the machine is switched off while performing tasks that do not need electricity. Refer to GP 10. Disconnect the power cord. Electricity can cause death or injury. Moving parts can cause injury.

Switch off, then switch on the machine, GP 10. **The fault persists.**

Y **N**

Perform SCP 5 Final Actions.

Enter dC131. Compare NVM values 720-052 and 720-063. **Both values are different.**

Y **N**

Perform SCP 5 Final Actions.

Install a new MCU PWB, PL 18.2 Item 2. **The fault persists.**

Y **N**

Perform SCP 5 Final Actions.

Re-install the original MCU PWB and perform GP 25, Function 03. NVRAM INIT MODE. **The fault persists.**

Y **N**

Perform SCP 5 Final Actions.

Install a new ESS PWB, PL 18.1A Item 5 (B400) or PL 18.1B Item 5 (B405).

NOTE: *Never install a new MCU PWB and ESS PWB at the same time. When installing a new MCU PWB and ESS PWB are required, install the new ESS PWB then switch on the machine, GP 10. After a successful restart, a new MCU PWB can be installed.*

124-349 Modal Break Point Restoration Fail RAP

124-349 Modal break point fail (one mismatches the others but cannot be automatically repaired.)

Procedure

WARNING

Ensure that the electricity to the machine is switched off while performing tasks that do not need electricity. Refer to GP 10. Disconnect the power cord. Electricity can cause death or injury. Moving parts can cause injury.

Switch off, then switch on the machine, GP 10. **The fault persists.**

Y **N**

Perform SCP 5 Final Actions.

Enter dC131. Compare NVM values 720-057 and 720-064. **Both values are different.**

Y **N**

Perform SCP Final Actions.

Install a new MCU PWB,PL 18.2 Item 2. **The fault persists.**

Y **N**

Perform SCP Final Actions.

Re-install the original MCU PWB and perform GP 25, Function 03. NVRAM INIT MODE. **The fault persists.**

Y **N**

Perform SCP Final Actions.

Install a new ESS PWB, PL 18.1A Item 5 (B400) or PL 18.1B Item 5 (B405).

NOTE: *Never install a new MCU PWB and ESS PWB at the same time. When installing a new MCU PWB and ESS PWB are required, install the new ESS PWB then switch on the machine, GP 10. After a successful restart, a new MCU PWB can be installed.*

124-350, 354, 380, 390 CRUM OEM Fail RAP

124-350 All three CRUM OEM destinations are not set (0 or different values are set).

124-354 The territory info that is stored in 3 locations are not initialized. Although the values all match, they are the values for 'Not set' (0).

124-380 The CRUM destinations stored in three positions match but their values are not set (0).

124-390 The CRUM OEM destinations stored in three positions match but their values are not set (0).

Procedure

WARNING

Ensure that the electricity to the machine is switched off while performing tasks that do not need electricity. Refer to GP 10. Disconnect the power cord. Electricity can cause death or injury. Moving parts can cause injury.

Switch off, then switch on the machine, GP 10. **The fault persists.**

Y **N**

Perform SCP Final Actions.

Enter dC131 Device ID and Billing Data. Make all three product numbers the same. **The fault persists.**

Y **N**

Perform SCP 5 Final Actions.

Install a new MCU PWB, PL 18.2 Item 2. **The fault persists.**

Y **N**

Perform SCP 5 Final Actions.

Re-install the original MCU PWB and perform GP 25, Function 03. NVRAM INIT MODE. **The fault persists.**

Y **N**

Perform SCP 5 Final Actions.

Install a new ESS PWB, PL 18.1A Item 5 (B400) or PL 18.1B Item 5 (B405).

NOTE: *Never install a new MCU PWB and ESS PWB at the same time. When installing a new MCU PWB and ESS PWB are required, install the new ESS PWB then switch on the machine, GP 10. After a successful restart, a new MCU PWB can be installed.*

124-372, 373, 374 IOT Soft Fail RAP

124-372 IOT controller software failure.

124-373 IOT manager software failure.

124-374 IOT IM device driver software failure.

Procedure

WARNING

Ensure that the electricity to the machine is switched off while performing tasks that do not need electricity. Refer to GP 10. Disconnect the power cord. Electricity can cause death or injury. Moving parts can cause injury.

Perform the steps that follow:

1. Switch off, then switch on the machine, GP 10.
2. Perform OF 3 Special Boot Modes RAP.
3. Ensure that all connectors on the ESS PWB, PL 18.1A Item 5 (B400) or PL 18.1B Item 5 (B405), and the MCU PWB, PL 18.2 Item 2 are connected securely. Ensure that all surface-mounted modules on the ESS PWB and MCU PWB are connected securely.
4. Upgrade the software, GP 4.
5. If the fault persists, install a new ESS PWB, PL 18.1A Item 5 (B400) or PL 18.1B Item 5 (B405).

127-310 to 127-315, 342 ESS Error RAP

127-310 A fatal error occurred in ESR task.

127-311 Fatal error related to ExtPRTc.

127-312 DFE detected a video link error.

127-313 ESS detected a video link error.

127-314 ESS detected a video link error.

127-315 A problem has occurred with software processing, causing the processing to stop.

127-342 A response such as system function recall error was detected.

Procedure

WARNING

Ensure that the electricity to the machine is switched off while performing tasks that do not need electricity. Refer to GP 10. Disconnect the power cord. Electricity can cause death or injury. Moving parts can cause injury.

Perform the steps that follow:

1. Switch off, then switch on the machine, GP 10.
2. Perform OF 3 Special Boot Modes RAP.
3. Ensure that all connectors on the ESS PWB, PL 18.1A Item 5 (B400) or PL 18.1B Item 5 (B405) are connected securely. Ensure all surface-mounted modules on the ESS PWB are connected securely.
4. Upgrade the software, GP 4.
5. If the fault persists, install a new ESS PWB, PL 18.1A Item 5 (B400) or PL 18.1B Item 5 (B405).

127-337 Job Template HDD Write Error RAP

127-337 An error occurred when the job template was stored on the HDD.

Procedure

WARNING

Ensure that the electricity to the machine is switched off while performing tasks that do not need electricity. Refer to GP 10. Disconnect the power cord. Electricity can cause death or injury. Moving parts can cause injury.

Perform the steps that follow:

1. Switch off, then switch on the machine, GP 10.
2. Perform OF 3 Special Boot Modes RAP.
3. Check the wiring between the ESS PWB, PL 18.1A Item 5 (B400) or PL 18.1B Item 5 (B405) and the hard disk.
4. Ensure that all connectors on the ESS PWB, PL 18.1A Item 5 (B400) or PL 18.1B Item 5 (B405) are connected securely. Ensure all surface-mounted modules on the ESS PWB are connected securely.
5. Initialize the hard disk. Refer to dC355 Hard Disk Diagnostics.
6. Upgrade the software, GP 4.
7. Perform GP 25, Function 04. HDD FORMAT MODE.
8. If the fault persists, install a new Hard disk, PL 18.1A Item 91 (B400) or PL 18.1B Item 91 (B405).
9. Perform GP 25, Function 03. NVRAM INIT MODE.

CAUTION

When installing a new ESS PWB and a new MCU PWB at the same time, first install the new ESS PWB, by following REP 18.1 (B405), REP 18.2 (B400). If the new ESS PWB installation is successful, switch off the machine, GP 10. Then, install the new MCU PWB.

10. If the fault persists, install a new:
    - ESS PWB, PL 18.1A Item 5 (B400) or PL 18.1B Item 5 (B405).
    - MCU PWB, PL 18.2 Item 2.

    NOTE: *If the fault persists after startup, perform dC132 to verify all numbers match. Go to Serial Number Re-Synchronization in GSN (Library 1503).*

127-353 to 127-399 Fatal Error RAP

127-353 Fatal error related to LPD.

127-354 Fatal error of FTP server was detected.

127-396 Fatal error related to mail IO.

127-398 Fatal error related to IPP.

127-399 Fatal error related to JME.

Procedure

WARNING

Ensure that the electricity to the machine is switched off while performing tasks that do not need electricity. Refer to GP 10. Disconnect the power cord. Electricity can cause death or injury. Moving parts can cause injury.

Perform the steps that follow:

1. Switch off, then switch on the machine, GP 10.
2. Have the customer check that the TCP/IP ports are correctly configured.
3. Perform the 016A Workflow Scanning Error Entry RAP.

127-700 SIP Registration Fail RAP

127-700 An error has occurred in registering device info with the SIP registration server.

Procedure

Have the customer:

1. Check what the SIP registration server is set to on the device.
2. Check that the SIP registration server is available.

133-210 to 133-217 Fax Parameter Incorrect RAP

133-210 The parameter value was inappropriate.

133-211 The PV exceeds the range.

133-212 The specified data was not found (incorrect number or channel).

133-213 The specified data cannot be read due to reasons such as the specified data is broken.

133-214 Detected by FAPE (create instance failed).

133-215 Sent to the FAPE as an asynchronized event.

133-216 Sent to the FAPE as an asynchronized event.

133-217 Sent to the FAPE as an asynchronized event.

Procedure

Perform the 033-312, 033-313, 033-315 to 033-327 Fax Fault RAP.

133-218 Fax Card Message Memory RAP

133-218 Insufficient fax card message library memory.

Procedure

Perform the steps that follow:

1. Switch off, then switch on the machine, GP 10.
2. Upgrade the software, GP 4.

133-219 to 133-223 Fax Card Error 1 RAP

133-219 Due to insufficient memory, the system was unable to reserve the memory required for processing.

133-220 Due to an error during fax controller software processing, subsequent processes cannot be performed.

133-221 The fax card did not respond within the specified time on booting.

133-222 The fax card did not respond within the specified time.

133-223 Fax card reset.

Procedure

Perform the 033-312, 033-313, 033-315 to 033-327 Fax Fault RAP.

133-224 Controller ROM Fax Card ROM Mismatch RAP

133-224 Version mismatch between the controller ROM and the fax card ROM.

Procedure

Upgrade the software, GP 4.

133-226 Illegal Country RAP

133-226 The code that does not provide fax service is set in the system data country code.

Procedure

Set a correct country code.

133-280 to 133-283 Fax Card Error 2 RAP

133-280 Due to either a fax card failure or fax cont SW failure, subsequent processes could not be performed.

133-281 A message not specified in the I/F settings was received from the fax card.

133-282 As downloading of fax card could not be completed due to either a fax card failure or fax cont SW failure, subsequent processes could not be performed.

133-283 Mailbox not open was detected when fax report is stored in a mailbox.

Procedure

Perform the 033-312, 033-313, 033-315 to 033-327 Fax Fault RAP.

133-701 Replacement Character Detected RAP

133-701 Character replacement has occurred in destination name, sender name, comment, station name.

Procedure

Perform the steps that follow:

1. Have the customer set the character that can be used by referring to the User Documentation. If the customer does not know the type of letter that can be used, advise them to use only alphanumeric characters.
2. If the fault persists, perform the 033-312, 033-313, 033-315 to 033-327 Fax Fault RAP.

133-710 Tray Select Fail RAP

133-710 When printing fax-received documents, it was performed via the bypass tray since the selected tray cannot be used for fax.

Procedure

Perform the steps that follow:

1. Have the customer load the correct the paper size and type for fax printing or specify the tray for fax printing.
2. If the fault persists, perform the steps that follow:
   a. Switch off, then switch on the machine, GP 10.
   b. Upgrade the software, GP 4.

500-030 DC612 IOT Wait State RAP

500-030 The machine changed state during dC612.

Procedure

Allow the machine to return from the wait state, then re-run the routine.

500-033, 500-035 Diagnostic Documents RAP

500-033 The document is not loaded or the documents are not enough when a diagnostics routine is performed.

500-035 The document size is different when a Diagnostic routine is performed.

Procedure

Load the required number and size of documents, then re-run the routine.

500-990 DC612 Print Error RAP

500-990 Printing could not start due to unknown reason in dC612 test pattern print, or it was aborted.

Procedure

Re-run the routine.

OF 1 Unusual Noises RAP

Use this procedure to isolate unusual noises.

NOTE: *Due to the intermittent nature of unusual noises, this RAP can only give guidance on how to isolate noises. This RAP will not find all possible causes. When machines become old and worn, unusual noises may arise that are not covered in this RAP.*

Procedure

WARNING

Switch off the electricity to the machine GP 10. Disconnect the power cord from the customer supply while performing tasks that do not need electricity. Electricity can cause death or injury. Moving parts can cause injury.

1. Ask the customer to demonstrate the function that generates the unusual noise.
2. Cycle system power. Wait while the printer performs a normal initialization and warm-up.
3. Run the machine in all modes. Also use the diagnostics to run individual components. Go to the relevant subsection:
   - When Switching on the Machine
   - During Standby
   - During Printing
   - During DADF Feeding

When Switching on the Machine

CAUTION

Do not run the dispenser motor, PL 5.1 Item 9 for more than 3 seconds at any speed as damage may occur.

Perform the steps that follow:

1. Check the operation of the dispenser motor. Enter dC330 code 093-001 (normal speed) or 093-002 (half-speed) and run the dispenser motor. If the noise persists, install a new toner cartridge, PL 8.1 Item 2.
2. Check the operation of the main drive assembly. Enter dC330 code 071-001 (normal speed), 071-002 (half-speed) or 071-003 (low speed) and run the main drive assembly. If the noise persists, install a new main drive assembly, PL 3.1 Item 1.
3. If the noise persists, replace the machine.

During Standby

Perform the steps that follow:

1. Check the operation of the LVPS fan. Enter dC330 code 042-003 and run the LVPS fan. If the noise persists, install a new LVPS fan, PL 4.1A Item 1 (B400) or PL 4.1B Item 1 (B405).

During Printing

Perform the steps that follow:

1. Install a new MSI feed solenoid, PL 13.1 Item 5.
2. If the noise persists, install a new registration clutch,PL 15.2 Item 4.

During DADF Feeding

Perform the steps that follow:

1. Clean the separation pad, PL 21.1 Item 4. If the noise persists, install a new separation pad, PL 21.1 Item 4.
2. If the noise persists, install a new scanner assembly, PL 21.1 Item 1.

OF 2 POST Error RAP

Use this RAP when the UI has stalled and shows the splash-logo screen, or the system appears to have power, but the UI is blank.

- Power on Self Test (POST) occurs each time the machine is powered on. POST verifies the functionality of key subsystems.
- POST begins when power is switched on before higher-level machine functions, such as the user interface are operational.
- The ESS PWB runs the POST.
- The fault is communicated using an LED display on the ESS PWB. This is to help diagnose common faults that prevent the machine from powering on correctly to the point where faults are displayed and service mode begins.

Procedure

WARNING

Ensure that the electricity to the machine is switched off while performing tasks that do not need electricity. Refer to GP 10. Disconnect the power cord. Electricity can cause death or injury. Moving parts can cause injury.

To check for the system power-on error:

1. Switch off, then switch on the machine, GP 10.
2. To view the LEDs, remove the option HDD, PL 18.1A Item 91 (B400) or PL 18.1B Item 91 (B405), and HDD bracket, PL 18.1A Item 4 (B400) or PL 18.1B Item 4 (B405) if fitted, Figure 1.

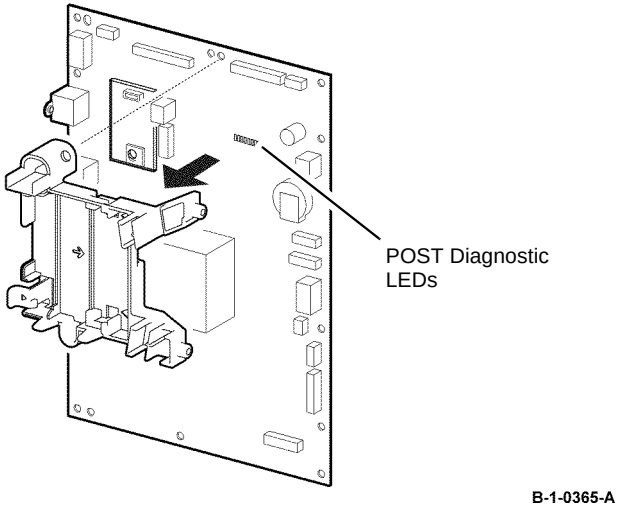

Figure 1 POST Diagnostic LEDs

3. Reconnect the HDD, without the HDD bracket, then switch on the machine, GP 10.
4. Check if the power on self test has completed successfully by ensuring that all LEDs are lit when the device has completed start-up. If the system power-on sequence has failed, refer to Table 1.
5. Check the steps that follow:
   - The power cord is plugged into the proper power source and no damage to the power cord exists.
   - If the power cord is damaged or there is no power to the machine, install a new power cord or relocate to a new, verified, power source.
   - If power is verified to the machine and the UI console has no display, proceed to step 6.
6. Install a new LVPS PWB, PL 18.1A Item 99 (B400) or PL 18.1B Item 10 (B405). If the UI console has no display proceed to step 7.
7. Install a new UI console assembly, PL 1.1A Item 4 (B400) or PL 1.1B Item 4 (B405). If the UI console has no display proceed to step 8.
8. Install a new MCU PWB, PL 18.2 Item 2. If the UI console has no display, proceed to step 9.
9. Reinstall the original MCU PWB, then install a new ESS PWB, PL 18.1A Item 5 (B400) or PL 18.1B Item 5 (B405).

   NOTE: *Never install a new MCU PWB and ESS PWB at the same time. When installing a new MCU PWB and ESS PWB are required, install the new ESS PWB then switch on the machine, GP 10. After a successful restart, a new MCU PWB can be installed.*

Table 1 ESS Status LEDs

Number	LED Pattern								Fault Condition	Normal Diagnosis	LongBoot Diagnosis	Related Fail Code
	LED7	LED6	LED5	LED4	LED3	LED2	LED1	LED0				
1	Off	Off	Off	Off	Off	Off	Off	Off	Initial status at power-on	Yes	Yes	-
2	Off	Off	Off	Off	Off	Off	Off	On	After CA7 L1 Boot has completed, SPI initialization	Yes	Yes	-
3	Off	Off	Off	Off	Off	Off	On	Off	Before jumping to CA7 L2 Boot Stage 2	Yes	Yes	-
4	Off	Off	Off	Off	Off	Off	On	On	After jumping to CA7 L2 Boot Stage 2, after initialization during SPI	Yes	Yes	-
5	Off	Off	Off	Off	Off	On	Off	Off	After DDR initialization has completed	Yes	Yes	-
6	Off	Off	Off	Off	Off	On	Off	On	obs	Yes	Yes	-
7	Off	Off	Off	Off	Off	On	On	Off	obs	Yes	Yes	-
8	Off	Off	Off	Off	Off	On	On	On	obs	Yes	Yes	-
9	Off	Off	Off	Off	On	Off	Off	Off	Before loading CA7 Boot Loader	Yes	Yes	-
10	Off	Off	Off	Off	On	Off	Off	On	Failed to load/jump to CA7 Boot Loader	Yes	Yes	-
11	Off	Off	Off	Off	On	Off	On	Off	Reserved (OFF)	-	-	-
12	Off	Off	Off	On	Off	Off	Off	Off	Reserved (OFF)	-	-	-
13	Off	Off	Off	On	Off	Off	Off	On	SPI module initialization has completed	Yes	Yes	-
14	Off	Off	Off	On	Off	Off	On	Off	I2C module initialization has completed	Yes	Yes	-
15	Off	Off	Off	On	Off	Off	On	On	Interrupt controller initialization has completed	Yes	Yes	-
16	Off	Off	Off	On	Off	On	Off	Off	Debug serial initialization has completed	Yes	Yes	-
17	Off	Off	Off	On	Off	On	Off	On	RTC Device initialization has completed	Yes	Yes	-
18	Off	Off	Off	On	Off	On	On	Off	FCSPI module initialization has completed	Yes	Yes	-
19	Off	Off	Off	On	Off	On	On	On	SD Card Power ON has completed	Yes	Yes	-
20	Off	Off	Off	On	On	Off	Off	Off	Hard Disk Power ON has completed	-	-	-
21	Off	Off	Off	On	On	Off	Off	On	CIP UI module initialization has completed	Yes	Yes	-
22	Off	Off	Off	On	On	Off	On	Off	Reserved (OFF)	-	-	-
23	Off	Off	Off	On	On	Off	On	On	Reserved (OFF)	-	-	-
24	Off	Off	Off	On	On	On	Off	Off	Reserved (OFF)	-	-	-
25	Off	Off	Off	On	On	On	Off	On	Reserved (OFF)	-	-	-
26	Off	Off	Off	On	On	On	On	Off	Reserved (OFF)	-	-	-
27	Off	Off	Off	On	On	On	On	On	Reserved (OFF)	-	-	-
28	Off	Off	On	Off	Off	Off	Off	Off	Software initialization process has started	Yes	Yes	-
29	Off	Off	On	Off	Off	Off	Off	On	Interrupt registration table initialization has completed	Yes	Yes	-
30	Off	Off	On	Off	Off	Off	On	Off	Interrupt vector copying and enabling has completed	Yes	Yes	-
31	Off	Off	On	Off	Off	Off	On	On	Mac Address has been obtained and stored	Yes	Yes	-
32	Off	Off	On	Off	Off	On	Off	Off	Diag table initialization has completed	Yes	Yes	-
33	Off	Off	On	Off	Off	On	Off	On	Memory area variable setting has completed	Yes	Yes	-
34	Off	Off	On	Off	Off	On	On	Off	Memory area variable notification process has completed	Yes	Yes	-
35	Off	Off	On	Off	Off	On	On	On	Command table initialization has completed	Yes	Yes	-
36	Off	Off	On	Off	On	Off	Off	Off	Global variable initialization has completed	Yes	Yes	-
37	Off	Off	On	Off	On	Off	Off	On	Connection Error: Check PWBA-AIRI (eMMC daughter board)	Yes	Yes	-
38	Off	Off	On	Off	On	Off	On	Off	Reserved (OFF)	-	-	-

Table 1 ESS Status LEDs

Number	LED Pattern								Fault Condition	Normal Diagnosis	LongBoot Diagnosis	Related Fail Code
	LED7	LED6	LED5	LED4	LED3	LED2	LED1	LED0				
39	Off	Off	On	Off	On	Off	On	On	Reserved (OFF)	-	-	-
40	Off	Off	On	Off	On	On	Off	Off	Reserved (OFF)	-	-	-
41	Off	Off	On	Off	On	On	Off	On	Reserved (OFF)	-	-	-
42	Off	Off	On	Off	On	On	On	Off	Reserved (OFF)	-	-	-
43	Off	Off	On	Off	On	On	On	On	Reserved (OFF)	-	-	-
44	Off	Off	On	On	Off	Off	Off	Off	JUMP to Mini OS section	Yes	Yes	-
45	Off	Off	On	On	Off	Off	Off	On	JUMP to Panbug Main section	-	-	-
46	On Off	On Off	On Off	On Off	On Off	On Off	On Off	On Off	Flashes 0xFF ->0x00 repeatedly and alternately. DDR initialization process has failed	Yes	Yes	-
47	On Off	On Off	On Off	On Off	Off On	Off On	Off On	Off On	Flashes 0xF0 and 0x0F repeatedly and alternately. Error: Checksum Error of the bootloader image loaded to the memory from FCSPI ROM.	Yes	Yes	-
48	On Off	Off Off	On Off	Off Off	Off Off	Off On	Off Off	Off On	CA15-0: (0xA0 -> 0x05) is repeating alternately. CPLD is showing an invalid boot mode.	Yes	Yes	-
49	Flashing								Flashes right to left, left to right repeatedly. Indicates PWBA Hardware Configuration is incorrect or not set.	Yes	Yes	-
50	Off	Off	On	On	Off	On	Off	Off	CA15-0:After the recovery from Switch OFF mode is detected by CPLD flag, before proceeding to read the NVM recovery data.	-	-	-
51	Off	Off	On	On	Off	On	Off	On	CA15-0: After reading the NVM recovery data, before calculating the checksum on the DDR.	-	-	-
52	Off	Off	On	On	Off	On	On	On	CA15-0: Immediately before jumping to the Switch OFF recovery point.	-	-	-
53	On Off	On Off	Off Off	Off Off	Off Off	Off Off	Off On	Off On	CA15-0: (0xC0 -> 0x03) is repeating alternately. Checksum Error during recovery from Switch OFF mode.	Yes	Yes	-
54	Off	Off	On	On	Off	Off	On	On	CA15-0: After the recovery from CPU OFF mode is detected by CPLD flag, before proceeding to read the NVM recovery data.	-	-	-
55	Off	Off	On	On	Off	On	On	Off	CA15-0: After reading the NVM recovery data, before calculating the checksum on the DDR.	-	-	-
56	Off	Off	On	On	On	Off	Off	Off	obs	-	-	-
57	Off	Off	On	On	On	Off	Off	On	obs	-	-	-
58	Off	Off	On	On	On	Off	On	Off	obs	-	-	-
59	Off	Off	On	On	On	Off	On	On	CA15-0: Immediately before jumping to the CPU OFF recovery point.	-	-	-
60	On Off	Off Off	Off Off	Off Off	Off Off	Off Off	Off Off	Off On	0x80 -> 0x01 is repeating alternately. Stored data checksum Error during recovery from CPU OFF mode.	-	-	-
61	On Off	On Off	On Off	Off Off	Off Off	Off On	Off On	Off On	0xE0 -> 0x07 is repeating alternately. Other Error has occurred at CA15, L2 Boot.	-	-	-
62	On	On	Off	On	Off	Off	Off	Off	SD module initialization has started	Yes	Yes	117-319
63	On	On	Off	On	Off	Off	Off	On	SD Card Power ON has completed	Yes	Yes	117-319
64	On	On	Off	On	Off	Off	On	Off	SD module initialization has completed	Yes	Yes	117-319
65	On	On	Off	On	Off	Off	On	On	SD Card driver error	Yes	Yes	117-319
66	On	On	Off	On	Off	On	Off	Off	An unsupported SD Card is inserted	Yes	Yes	117-321

Table 1 ESS Status LEDs

Number	LED Pattern								Fault Condition	Normal Diagnosis	LongBoot Diagnosis	Related Fail Code
	LED7	LED6	LED5	LED4	LED3	LED2	LED1	LED0				
67	On	On	Off	On	Off	On	Off	On	SD Card is not inserted (not detected)	Yes	Yes	117-329
68	On	On	Off	On	Off	On	On	Off	Reserved (OFF)	-	-	-
69	On	On	Off	On	Off	On	On	On	Reserved (OFF)	-	-	-
70	On	On	Off	On	On	Off	Off	Off	Reserved (OFF)	-	-	-
71	On	On	Off	On	On	Off	Off	On	Reserved (OFF)	-	-	-
72	On	On	Off	On	On	Off	On	Off	SD module initialization has completed	Yes	Yes	117-319
73	On	On	Off	On	On	Off	On	On	Read process from SD Card has started	Yes	Yes	117-319
74	On	On	Off	On	On	On	Off	Off	SD module initialization check has completed	Yes	Yes	117-319
75	On	On	Off	On	On	On	Off	On	A15 Program memory expansion has completed	Yes	Yes	117-319
76	On	On	Off	On	On	On	On	Off	A7 Program memory expansion has completed	Yes	Yes	-
77	On	On	Off	On	On	On	On	On	Reserved (OFF)	-	-	-
78	On	On	Off	Off	Off	Off	Off	On	BackPlane Disconnect Detection	Yes	Yes	16-327
79	On	On	Off	Off	Off	Off	On	Off	UI cable Disconnect Detection	Yes	Yes	16-326
80	On	On	Off	Off	Off	Off	On	On	MCU Harness Disconnect Detection	Yes	Yes	16-328
81	On	On	Off	Off	Off	On	Off	Off	Detects the connection of a unknown PCI Option device.	Yes	Yes	117-336
82	On	On	Off	Off	Off	On	Off	On	Detects the connection of a unknown PCI EX Option device.	Yes	Yes	117-337
83	On	On	Off	Off	Off	On	On	Off	SD Card Insertion Detection	Yes	Yes	117-338
84	Off	On	Off	Off	Off	Off	Off	Off	IO ASIC diagnostic has started	Yes	Yes	016-355
85	Off	On	Off	Off	Off	Off	Off	On	IO ASIC diagnostic has completed	-	-	-
86	Off	On	Off	Off	Off	Off	On	Off	Codec ASIC diagnostic has started	Yes	Yes	016-356
87	Off	On	Off	Off	Off	Off	On	On	Codec ASIC diagnostic has completed	-	-	-
88	Off	On	Off	Off	Off	On	Off	Off	Standard FontROM diagnostic has started	-	-	116-380
89	Off	On	Off	Off	Off	On	Off	On	Standard FontROM diagnostic has completed	-	-	-
90	Off	On	Off	Off	Off	On	On	Off	Extension FontROM diagnostic has started	-	-	116-380 116-310 116-317
91	Off	On	Off	Off	Off	On	On	On	Extension FontROM diagnostic has completed	-	-	-
92	Off	On	Off	Off	On	Off	Off	Off	SEEP diagnostic has started	Yes	Yes	16-351 16-350
93	Off	On	Off	Off	On	Off	Off	On	SEEP diagnostic has completed	-	-	-
94	Off	On	Off	Off	On	Off	On	Off	Timer diagnostic has started	Yes	Yes	16-343
95	Off	On	Off	Off	On	Off	On	On	Timer diagnostic has completed	-	-	-
96	Off	On	Off	Off	On	On	Off	Off	PageMemory diagnostic has started	-	Yes	16-317
97	Off	On	Off	Off	On	On	Off	On	PageMemory diagnostic has completed	-	-	-
98	Off	On	Off	Off	On	On	On	Off	IITIF diagnostic has started	-	-	16-319 16-329 16-333 16-334 16-348
99	Off	On	Off	Off	On	On	On	On	IITIF diagnostic has completed	-	-	-

Table 1 ESS Status LEDs

Number	LED Pattern								Fault Condition	Normal Diagnosis	LongBoot Diagnosis	Related Fail Code
	LED7	LED6	LED5	LED4	LED3	LED2	LED1	LED0				
100	Off	On	Off	On	Off	Off	Off	Off	OS communication diagnostic has started	-	Yes	16-383
101	Off	On	Off	Off	Off	Off	Off	On	OS communication diagnostic has completed	-	-	-
102	Off	On	Off	On	Off	Off	On	Off	RTC diagnostic has started	-	Yes	16-342
103	Off	On	Off	On	Off	Off	On	On	RTC diagnostic has completed	-	-	-
104	Off	On	Off	On	Off	On	Off	Off	UI Check diagnostic has started	-	Yes	16-362
105	Off	On	Off	On	Off	On	Off	On	UI Check diagnostic has completed	-	-	-
106	Off	On	Off	On	Off	On	On	Off	Lyra diagnostic has started	-	-	-
107	Off	On	Off	On	Off	On	On	On	Lyra diagnostic has completed	-	-	-
108	Off	On	Off	On	On	Off	Off	Off	USB 1.0 Host diagnostic has started	-	-	16-371
109	Off	On	Off	On	On	Off	Off	On	USB 1.0 Host diagnostic has completed	-	-	-
110	Off	On	Off	On	On	Off	On	Off	USB 2.0 Host diagnostic has started	-	Yes	16-364
111	Off	On	Off	On	On	Off	On	On	USB 2.0 Host diagnostic has completed	-	-	-
112	Off	On	Off	On	On	On	Off	Off	USB 2.0 Device diagnostic has started	-	Yes	16-365
113	Off	On	Off	On	On	On	Off	On	USB 2.0 Device diagnostic has completed	-	-	-
114	Off	On	Off	On	On	On	On	Off	HDD diagnostic has started	-	Yes	16-366 16-367
115	Off	On	Off	On	On	On	On	On	HDD diagnostic has completed	-	-	-
116	Off	On	On	Off	Off	Off	Off	Off	HDD (UFS) diagnostic has started	-	Yes	16-372
117	Off	On	On	Off	Off	Off	Off	On	HDD (UFS) diagnostic has completed	-	-	-
118	Off	On	On	Off	Off	Off	On	Off	Torino diagnostic has started	-	-	16-368
119	Off	On	On	Off	Off	Off	On	On	Torino diagnostic has completed	-	-	-
120	Off	On	On	Off	Off	On	Off	Off	Selene diagnostic has started	-	Yes	16-369
121	Off	On	On	Off	Off	On	Off	On	Selene diagnostic has completed	-	-	-
122	Off	On	On	Off	Off	On	On	Off	Ethernet diagnostic has started	-	Yes	16-349
123	Off	On	On	Off	Off	On	On	On	Ethernet diagnostic has completed	-	-	-
124	Off	On	On	Off	On	Off	Off	Off	SdCard diagnostic has started	-	Yes	117-324 117-320 117-321 117-323
125	Off	On	On	Off	On	Off	Off	On	SdCard diagnostic has completed	-	-	-
126	Off	On	On	Off	On	Off	On	Off	IOT communication diagnostic has started	-	Yes	016-353
127	Off	On	On	Off	On	Off	On	On	IOT communication diagnostic has completed	-	-	-
128	Off	On	On	Off	On	On	Off	Off	IIT communication diagnostic has started	-	Yes	016-354
129	Off	On	On	Off	On	On	Off	On	IIT communication diagnostic has completed	-	-	-
130	Off	On	On	Off	On	On	On	Off	Standard ROM diagnostic has started	-	Yes	116-317 16-336
131	Off	On	On	Off	On	On	On	On	Standard ROM diagnostic has completed	-	-	-
132	Off	On	On	On	Off	Off	Off	Off	EP accessory diagnostic has started	-	Yes	016-357
133	Off	On	On	On	Off	Off	Off	On	EP accessory diagnostic has completed	-	-	-

Table 1 ESS Status LEDs

Number	LED Pattern								Fault Condition	Normal Diagnosis	LongBoot Diagnosis	Related Fail Code
	LED7	LED6	LED5	LED4	LED3	LED2	LED1	LED0				
134	Off	On	On	On	Off	Off	On	Off	Parallel diagnostic has started	-	Yes	016-358
135	Off	On	On	On	Off	Off	On	On	Parallel diagnostic has completed	-	-	-
136	Off	On	On	On	Off	On	Off	Off	USBHUB diagnostic has started	-	Yes	016-359
137	Off	On	On	On	Off	On	Off	On	USBHUB diagnostic has completed	-	-	-
138	Off	On	On	On	Off	On	On	Off	USB 3.0 Drv diagnostic has started	-	Yes	016-361
139	Off	On	On	On	Off	On	On	On	USB 3.0 Drv diagnostic has completed	-	-	-
140	Off	On	On	On	On	Off	Off	Off	WIFI diagnostic has started	-	Yes	016-384
141	Off	On	On	On	On	Off	Off	On	WIFI diagnostic has completed	-	-	-
142	Off	On	On	On	On	Off	On	Off	A4Fax diagnostic has started	-	Yes	016-346
143	Off	On	On	On	On	Off	On	On	A4Fax diagnostic has completed	-	-	-
144	On	Off	Off	Off	Off	Off	Off	Off	Power Savor transition (Standby -> LowPower)	Yes	-	-
145	On	Off	Off	Off	Off	Off	Off	On	Power Saving (LowPower)	Yes	-	-
146	On	Off	Off	Off	Off	Off	On	Off	Power Saving (Sleep)	Yes	-	-
147	On	Off	Off	Off	Off	Off	On	On	Power Savor transition (LowPower->Sleep)	Yes	-	-
148	Off	Off	Off	Off	Off	Off	Off	Off	Power Saving (CpuOFF)	Yes	-	-
149	On	Off	Off	Off	Off	On	Off	Off	Reserved (OFF)	-	-	-
150	On	Off	Off	Off	Off	On	On	On	Reserved (OFF)	-	-	-
151	On	Off	Off	Off	On	Off	Off	On	Power Savor transition (LowPower -> Standby)	Yes	-	-
152	On	Off	Off	Off	On	Off	On	Off	Power Savor transition (Sleep -> Standby)	Yes	-	-
153	On	Off	Off	On	Off	Off	Off	Off	Reserved (OFF)	-	-	-
154	On	Off	Off	On	Off	Off	Off	On	Reserved (OFF)	-	-	-
155	On	Off	Off	On	Off	Off	On	Off	Reserved (OFF)	-	-	-
156	On	Off	Off	On	Off	Off	On	On	Reserved (OFF)	-	-	-
157	On	Off	Off	On	Off	On	Off	Off	Reserved (OFF)	-	-	-
158	On	Off	Off	On	Off	On	Off	On	Power Savor transition (CpuOff -> Sleep)	Yes	-	-
159	On	On	On	On	On	On	On	On	VxWORKS boot complete Recovering from Power Savor	Yes	Yes	-

OF 3 Special Boot Modes RAP

Use this RAP to solve boot up errors. If directed here from another procedure, always return to that procedure.

Procedure

WARNING

Ensure that the electricity to the machine is switched off while performing tasks that do not need electricity. Refer to GP 10. Disconnect the power cord. Electricity can cause death or injury. Moving parts can cause injury.

Perform the steps that follow:

1. Enter special boot mode, GP 25.
2. Perform the special boot modes in the order that follows:
   a. LONGDIAG MODE.
   b. 01. JOB LOG CLEAR MODE.
   c. 06. HDD INITIALIZE MODE.
   d. 04. HDD FORMAT MODE.
   e. 03. NVRAM INIT MODE.

3 Image Quality RAPs

IQ1 Image Quality Entry RAP 3-3
IQ2 Light or Undertoned Print RAP 3-5
IQ3 Unfused Image RAP 3-6
IQ4 Random Spots RAP 3-7
IQ5 Blank Print RAP 3-8
IQ6 In Process Direction Streaks RAP 3-9
IQ7 Black Prints RAP 3-10
IQ8 Pitched Black Dots RAP 3-11
IQ9 In Process Deletions RAP 3-12
IQ10 Ghosting RAP 3-13
IQ11 Light Induced Fatigue RAP 3-14
IQ12 Fog, Background Contamination RAP 3-15
IQ13 Bead Carry-Out RAP 3-16
IQ14 Jagged Characters RAP 3-16
IQ15 Cross Process Bands RAP 3-17
IQ16 Auger Marks RAP 3-18
IQ17 Wrinkled or Stained Paper RAP 3-19
IQ18 Lead Edge Damage RAP 3-20
IQ19 Incorrect Top and Side Margins RAP 3-20
IQ20 Skewed Images RAP 3-21
IQ21 Repeating Defects Procedure 3-22
IQ22 Skew Check 3-23
IQ23 Registration Check 3-24

IQ1 Image Quality Entry RAP

Use this RAP to determine the source of an image quality defect.

Initial Actions

Refer to Figure 1 for the print/copy definitions.

Perform the steps that follow. If the image quality fault persists, go to Image Defect Definitions:

- Discuss the IQ problem with the customer to fully understand the defect and the modes in which it occurs. Produce the customer job that displays the customer's IQ defect.
- Check the condition of the paper. Do not use incorrectly cut paper, damp paper, paper with rough edges, badly drilled paper, paper with wrapper wax or glue. Paper and media should be stored flat, enclosed in wrappers, in a cool dry environment.
- Check that the paper is within specifications, GP 15.
- Verify that the media type is set correctly.
- Inspect the paper path for items such as staples, paper clips or paper fragments.
- Check that all paper tray guides are set to the correct paper size.
- Check that the document guides on the DADF are set correctly.
- Ensure that the image adjustment mode selections are those used by the customer.
- Check the original documents for defects.
- Ensure the machines altitude NVM value is correct. Refer to ADJ 1.3 Altitude Adjustment.
- Ensure that the Drum Cartridge, PL 8.1 Item 1 and the toner cartridge, PL 8.1 Item 2 are installed correctly.
- Enter dC131 Check NVM value 756-800 Xerographic Unit Page Count. If the Drum Cartridge is close to end of life (65K feeds), install a new Drum Cartridge, PL 8.1 Item 1.
- Enter dC131. Check NVM value 756-824 Toner Gas Gauge. If the toner cartridge is nearly empty, install a new toner cartridge, PL 8.1 Item 2.

Image Defect Definitions

Table 1 lists image defect definitions and the IQ RAP used to correct the problem.

Table 1 Image defect definitions

Defect	Definition	Go To
Auger marks	Auger marks appear across output	IQ16
Bead carry-out	Multiple dots appearing across image.	IQ13
Black prints	Part of the entire output is black	IQ7
Blank prints	Prints with no visible image.	IQ5
Fog	Toner contamination on all or part of the page appears as a very light gray dusting or fog.	IQ12
Ghosting	The image from a previous print appears on the current print.	IQ10
Cross process banding	Voids and streaks that appear as areas of horizontal bands.	IQ15
Incorrect margins	Image prints outside of the page margins.	IQ19
In process streaks	Extraneous dark lines/bands in the process direction.	IQ6

Table 1 Image defect definitions

Defect	Definition	Go To
Jagged characters	Text in image is fuzzy or blurry	IQ14
Lead edge paper damage	The page comes out with the leading edge damaged.	IQ18
Light prints	The overall image density is too light.	IQ2
Light-induced fatigue	Light fatigue pattern appearing across image	IQ11
Pitched dots	Recurring dots or spots in the process direction.	IQ8
Skewed images	Images in the output are not parallel to the edge of the printed sheet.	IQ20
Spots	There are random spots of toner on the page.	IQ4
Unfused image	Part or all of the image is unfused. Refer to the specification.	IQ3
In process deletions	Areas of image appear as blanks or deletions.	IQ9
Wrinkled paper	The paper comes out either wrinkled, creased, stained, or torn	IQ17

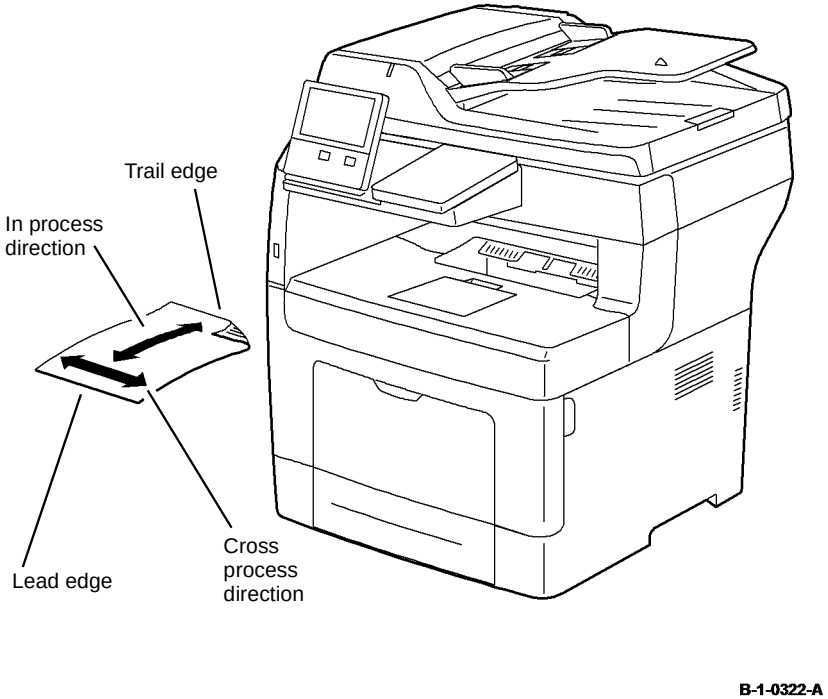

Figure 1 Print/copy definitions

IQ1 Internal Test Patterns

Table 2 describes the test patterns and the purpose for which they should be used to identify image quality defects.

To print the test print from the control panel, perform dC612Print Test Pattern.

Table 2 Internal test patterns

Internal Test Pattern Number	Name	Intended Use	Notes
51	Total Pattern	For Engineering/ Manufacturing use.	Screen must be set to: Gradation, Standard or Fineness.
52	Total Pattern (Manufacturer)	For Engineering/ Manufacturing use.	Screen must be set to: Gradation, Standard or Fineness.
53	All Solid (1-Sided)	For Engineering/ Manufacturing use.	Screen must be set to: Gradation, Standard or Fineness.

Table 2 Internal test patterns

Internal Test Pattern Number	Name	Intended Use	Notes
54	All Solid (2-Sided)	For Engineering/ Manufacturing use.	Screen must be set to: Gradation, Standard or Fineness.
55	Whole-page Halftone	Detection of banding and defect detection.	Screen must be set to: Gradation, Standard or Fineness.
57	Alignment	Checking alignment	Screen must be set to: Gradation, Standard or Fineness.
58	Gradation	General Image Quality problem isolation.	Screen must be set to: Gradation, Standard or Fineness.
63	Pitch Confirmation	General Image Quality problem and repeating defect isolation.	Screen must be set to: Gradation, Standard or Fineness.
64	Ghosting	Detection of Ghosting.	Screen must be set to: Gradation, Standard or Fineness.
112	IIT Analog Gradation	For Engineering/ Manufacturing use.	Screen must be set to: Copy Error Diffusion
115	Pre IPS/FS Increment	For Engineering/ Manufacturing use.	Screen must be set to: Copy Error Diffusion
119	Pre IPS/SS Increment	For Engineering/ Manufacturing use.	Screen must be set to: Copy Error Diffusion
120	Even Density of Whole Page	Detection of banding and defect detection.	Screen must be set to: Copy Error Diffusion
123	Pre IPS/Shading Data BW	For Engineering/ Manufacturing use.	Screen must be set to: Copy Error Diffusion
128	Post IPS/Grid/BW	Detection of skew and distortion defects.	Screen must be set to: Copy Error Diffusion

IQ2 Light or Undertoned Print RAP

The overall image density is too light, Figure 1.

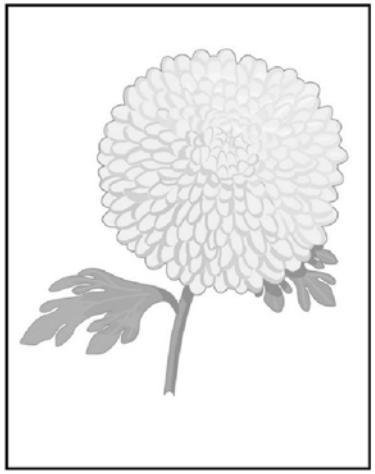

B-1-0305-A

Figure 1 Light or undertone print

Initial Actions

WARNING

Ensure that the electricity to the machine is switched off while performing tasks that do not need electricity. Refer to GP 10. Disconnect the power cord. Electricity can cause death or injury. Moving parts can cause injury.

WARNING

Do not touch the fuser while it is hot.

- Ensure that there are no obstructions in the laser light path.
- Advise the customer to ensure that Toner Saver is turned off in the print driver.
- Adjust the transfer setting for the loaded paper type. Refer to ADJ 1.1 Transfer Adjustment.

Procedure

Remove the CRU transfer roller assembly, PL 6.1 Item 1. Check for surface contamination or excessive wear, ensure the transfer roller is correctly seated. **The transfer roller is good.**

Y N

Install a new CRU transfer roller assembly, PL 6.1 Item 1.

Check the BTR plate spring on the HVPS, PL 18.2 Item 5. **The plate spring is clean and undamaged.**

Y N

As necessary, clean the plate spring or install a new HVPS, PL 18.2 Item 5.

Remove the Drum Cartridge, PL 8.1 Item 1. Refer to Wiring Diagram 8. Check the BCR and DB spring connectors on the HVPS, PL 18.2 Item 5. **The spring connectors are clean and undamaged.**

Y N

As necessary, clean the spring connectors or install a new HVPS, PL 18.2 Item 5.

Enter dC330, code 093-001 to run the toner dispenser motor, PL 5.1 Item 9. **The toner dispenser motor runs.**

Y N

Check the toner dispenser motor. Refer to:

- Wiring Diagram 6
- GP 6 How to Check a Motor.

If necessary, install a new toner dispenser motor, PL 5.1 Item 9.

Check the ATC sensor contact point on the Drum Cartridge, PL 8.1 Item 1 and the xerographic connector assembly, PL 5.1 Item 10. **The contact point is good.**

Y N

Install new components as necessary:

- Drum Cartridge, PL 8.1 Item 1.
- Xerographic connector assembly, PL 5.1 Item 10.

Ensure that all connectors on the ESS PWB, PL 18.1A Item 5 (B400) or PL 18.1B Item 5 (B405) and the MCU PWB, PL 18.2 Item 2 are securely connected. Ensure all surface mounted modules on the ESS PWB and MCU PWB are securely connected. **The image quality defect persists.**

Y N

Perform SCP 5 Final Actions.

Install new components as necessary:

- Drum Cartridge, PL 8.1 Item 1.
- HVPS, PL 18.2 Item 5.
- ROS unit, PL 2.1 Item 4.

IQ3 Unfused Image RAP

The printed image is not fully fused to the paper, Figure 1. The image rubs off easily. A cold environment affects the warm-up time, while high humidity has an adverse effect on fusing. Also, media weight and composition affect fusing performance.

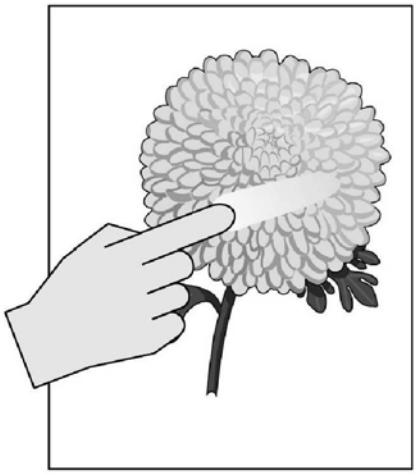

B-1-0306-A

Figure 1 Unfused image

Initial Actions

WARNING

Ensure that the electricity to the machine is switched off while performing tasks that do not need electricity. Refer to GP 10. Disconnect the power cord. Electricity can cause death or injury. Moving parts can cause injury.

WARNING

Do not touch the fuser while it is hot.

- Check the environment. A location that is too cold or humid reduces fusing performance.
- Set media type setting to the next heavier type.
- Ensure the green fuser nip release levers are in the locked position.
- Adjust the fuser temperature setting for the loaded paper type. Refer to ADJ 1.2 Fuser Adjustment.

Procedure

Rub the image with a soft cloth or tissue. **The image smears.**

Y N

Perform SCP 5 Final Actions.

Replace the media with new, dry media from an unopened ream. **The image smears.**

Y N

Perform SCP 5 Final Actions.

Remove the fuser unit, PL 7.1 Item 1. Check the fuser rolls for contamination. **The fuser rolls are clean.**

Y N

Clean the fuser rolls. If necessary, install a new fuser assembly, PL 7.1 Item 1.

Refer to Wiring Diagram 9. Check the fuser electrical connection and wiring. **The connector and wiring are good.**

Y N

Repair or install a new fuser harness assembly, PL 18.3A Item 9 (B400) or PL 18.3B Item 9 (B405).

Install a new fuser assembly, PL 7.1 Item 1.

IQ4 Random Spots RAP

There are spots of toner randomly scattered on the page, Figure 1.

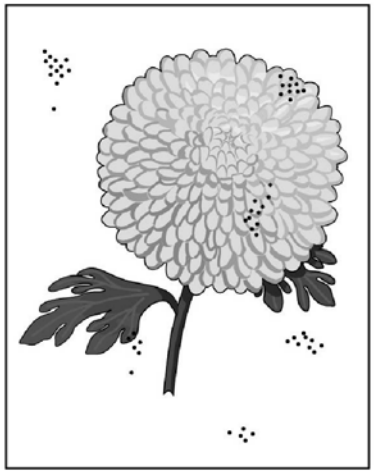

B-1-0307-A

Figure 1 Random spots

Initial Actions

WARNING

Ensure that the electricity to the machine is switched off while performing tasks that do not need electricity. Refer to GP 10. Disconnect the power cord. Electricity can cause death or injury. Moving parts can cause injury.

WARNING

Do not touch the fuser while it is hot.

- Check that the paper is clean, dry, and meets specifications.
- Check the drum surface for spots or contamination.
- Check the fuser unit for wear or contamination.

Procedure

Print a test pattern. **The image quality defect persists.**

Y N

Clean the document glass. If the fault persists, install a new IIT assembly, PL 21.1 Item 14.

Remove the CRU transfer roller assembly, PL 6.1 Item 1. Check for surface contamination or excessive wear, ensure the transfer roller is correctly seated. **The transfer roller is good.**

Y N

Install a new CRU transfer roller assembly, PL 6.1 Item 1.

A

Check the BTR plate spring on the HVPS, PL 18.2 Item 5. **The plate spring is clean and undamaged.**

Y N

As necessary, clean the plate spring or install a new HVPS, PL 18.2 Item 5.

Remove the Drum Cartridge, PL 8.1 Item 1. Refer to Wiring Diagram 8. Check the BCR and DB spring connectors on the HVPS, PL 18.2 Item 5. **The spring connectors are clean and undamaged.**

Y N

As necessary, clean the spring connectors or install a new HVPS, PL 18.2 Item 5.

Install new components as necessary:

- Fuser assembly, PL 7.1 Item 1.
- HVPS, PL 18.2 Item 5.

IQ5 Blank Print RAP

No visible image anywhere on the output, Figure 1.

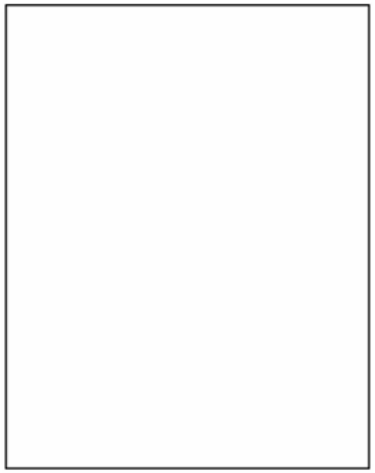

B-1-0323-A

Figure 1 Blank print

Initial Actions

WARNING

Ensure that the electricity to the machine is switched off while performing tasks that do not need electricity. Refer to GP 10. Disconnect the power cord. Electricity can cause death or injury. Moving parts can cause injury.

WARNING

Do not touch the fuser while it is hot.

- Clear any obstructions in the laser light path.

Procedure

Remove the CRU transfer roller assembly, PL 6.1 Item 1. Check for surface contamination or excessive wear, ensure the transfer roller is correctly seated. **The transfer roller is good.**

Y N

Install a new CRU transfer roller assembly, PL 6.1 Item 1.

Check the BTR plate spring on the HVPS, PL 18.2 Item 5. **The plate spring is clean and undamaged.**

Y N

As necessary, clean the plate spring or install a new HVPS, PL 18.2 Item 5.

A

A

Remove the Drum Cartridge, PL 8.1 Item 1. Refer to Wiring Diagram 8. Check the BCR and DB spring connectors on the HVPS, PL 18.2 Item 5. **The spring connectors are clean and undamaged.**

Y N

As necessary, clean the spring connectors or install a new HVPS, PL 18.2 Item 5.

Enter dC330, code 093-001 to run the toner dispenser motor, PL 5.1 Item 9. **The toner dispenser motor runs.**

Y N

Check the toner dispenser motor. Refer to:

- Wiring Diagram 6
- GP 6 How to Check a Motor.

If necessary, install a new toner dispenser motor, PL 5.1 Item 9.

Check the ATC sensor contact point on the Drum Cartridge, PL 8.1 Item 1 and the xerographic connector assembly, PL 5.1 Item 10. **The contact point is good.**

Y N

Install new components as necessary:

- Drum Cartridge, PL 8.1 Item 1.
- Xerographic connector assembly, PL 5.1 Item 10.

Ensure that all connectors on the ESS PWB, PL 18.1A Item 5 (B400) or PL 18.1B Item 5 (B405) and the MCU PWB, PL 18.2 Item 2 are securely connected. Ensure all surface mounted modules on the ESS PWB and MCU PWB are securely connected. **The image quality defect persists.**

Y N

Perform SCP 5 Final Actions.

Install new components as necessary:

- Drum Cartridge, PL 8.1 Item 1.
- HVPS, PL 18.2 Item 5.
- ROS unit, PL 2.1 Item 4.

IQ6 In Process Direction Streaks RAP

Extraneous dark lines or bands in the process direction, Figure 1.

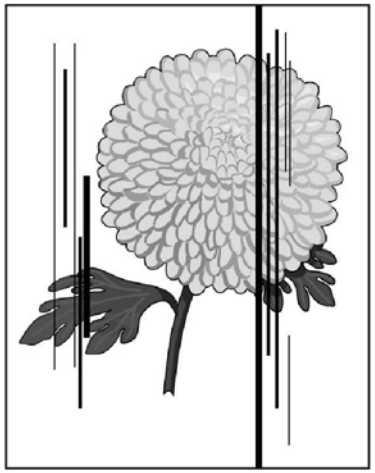

B-1-0308-A

Figure 1 Streaks

Procedure

WARNING

Ensure that the electricity to the machine is switched off while performing tasks that do not need electricity. Refer to GP 10. Disconnect the power cord. Electricity can cause death or injury. Moving parts can cause injury.

WARNING

Do not touch the fuser while it is hot.

Print a test pattern. **The image quality defect persists.**

Y N

Clean the document glass. If the steaks are the full length of the paper, clean the CVT glass (position to the left of the document glass). If the fault persists, install a new IIT assembly, PL 21.1 Item 14.

Remove the CRU transfer roller assembly, PL 6.1 Item 1. Check for surface contamination or excessive wear, ensure the transfer roller is correctly seated. **The transfer roller is good.**

Y N

Install a new CRU transfer roller assembly, PL 6.1 Item 1.

Check the BTR plate spring on the HVPS, PL 18.2 Item 5. **The plate spring is clean and undamaged.**

Y N

As necessary, clean the plate spring or install a new HVPS, PL 18.2 Item 5.

A

Remove the Drum Cartridge, PL 8.1 Item 1. Refer to Wiring Diagram 8. Check the BCR and DB spring connectors on the HVPS, PL 18.2 Item 5. **The spring connectors are clean and undamaged.**

Y N

As necessary, clean the spring connectors or install a new HVPS, PL 18.2 Item 5.

Install new components as necessary:

- Drum Cartridge, PL 8.1 Item 1.
- HVPS, PL 18.2 Item 5.
- ROS unit, PL 2.1 Item 4.

IQ7 Black Prints RAP

Black, or partially black image, Figure 1.

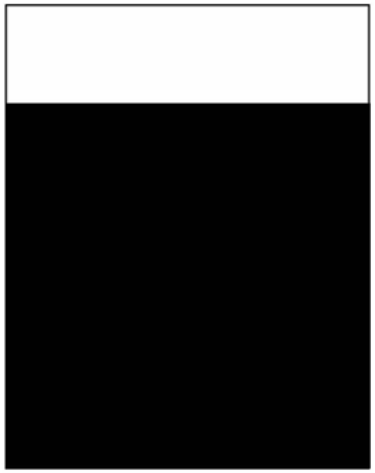

B-1-0324-A

Figure 1 Vertical process streak

Procedure

WARNING

Ensure that the electricity to the machine is switched off while performing tasks that do not need electricity. Refer to GP 10. Disconnect the power cord. Electricity can cause death or injury. Moving parts can cause injury.

WARNING

Do not touch the Fuser while it is hot.

Print a test pattern. **The image quality defect persists.**

Y N

Install a new IIT assembly, PL 21.1 Item 14.

Check the BTR plate spring on the HVPS, PL 18.2 Item 5. **The plate spring is clean and undamaged.**

Y N

As necessary, clean the plate spring or install a new HVPS, PL 18.2 Item 5.

Remove the Drum Cartridge, PL 8.1 Item 1. Refer to Wiring Diagram 8. Check the BCR and DB spring connectors on the HVPS, PL 18.2 Item 5. **The spring connectors are clean and undamaged.**

Y N

As necessary, clean the spring connectors or install a new HVPS, PL 18.2 Item 5.

Install new components as necessary:

- HVPS, PL 18.2 Item 5.
- ROS unit, PL 2.1 Item 4.

IQ8 Pitched Black Dots RAP

Recurring dots or spots in the process direction, Figure 1.

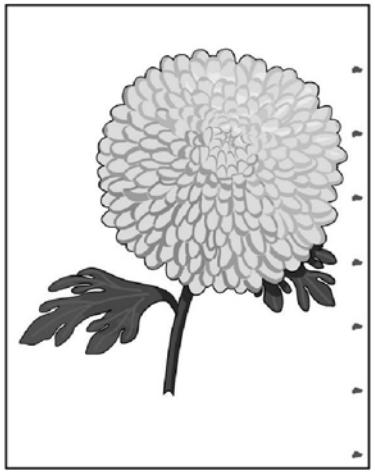

B-1-0309-A

Figure 1 Pitched dots

Procedure

WARNING

Ensure that the electricity to the machine is switched off while performing tasks that do not need electricity. Refer to GP 10. Disconnect the power cord. Electricity can cause death or injury. Moving parts can cause injury.

WARNING

Do not touch the fuser while it is hot.

Print test pattern 63, Pitch Confirmation. **The cause of the image quality defect can be determined from the test pattern.**

Y N

Print a test pattern. **The image quality defect persists.**

Y N

Clean the document glass and the DADF feed rolls. If the fault persists, install a new components as necessary:

- DADF feed roller assembly, PL 21.1 Item 3.
- IIT assembly, PL 21.1 Item 14.

Remove the CRU transfer roller assembly, PL 6.1 Item 1. Check for surface contamination or excessive wear, ensure the transfer roller is correctly seated. **The transfer roller is good.**

Y N

Install a new CRU transfer roller assembly, PL 6.1 Item 1.

A B

A B

Check the BTR plate spring on the HVPS, PL 18.2 Item 5. **The plate spring is clean and undamaged.**

Y N

As necessary, clean the plate spring or install a new HVPS, PL 18.2 Item 5.

Remove the Drum Cartridge, PL 8.1 Item 1. Refer to Wiring Diagram 8. Check the BCR and DB spring connectors on the HVPS, PL 18.2 Item 5. **The spring connectors are clean and undamaged.**

Y N

As necessary, clean the spring connectors or install a new HVPS, PL 18.2 Item 5.

Remove the fuser unit, PL 7.1 Item 1. Check the fuser rolls for contamination. **The fuser rolls are clean.**

Y N

Clean the fuser rolls. If necessary, install a new fuser assembly, PL 7.1 Item 1.

Install a new HVPS, PL 18.2 Item 5.

Clean the relevant component or install new components as necessary.

IQ9 In Process Deletions RAP

Deletions in the process direction, Figure 1.

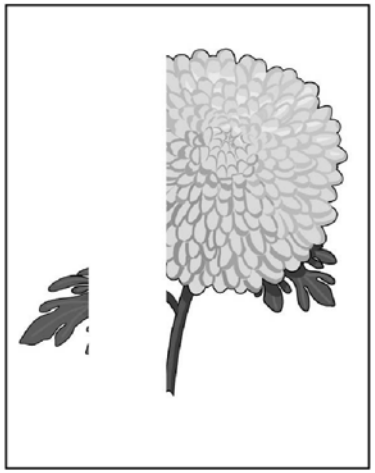

B-1-0310-A

Figure 1 Deletions

Initial Actions

WARNING

Ensure that the electricity to the machine is switched off while performing tasks that do not need electricity. Refer to GP 10. Disconnect the power cord. Electricity can cause death or injury. Moving parts can cause injury.

WARNING

Do not touch the fuser while it is hot.

- Check that rollers and other media path components are clean and unobstructed.
- If the deletions are small and align with the stripper fingers in the fuser, clean the stripper fingers. If necessary, install a new fuser unit, PL 7.1 Item 1.

Procedure

CAUTION

Do not touch the surface of the drum while cleaning the Drum Cartridge.

Remove the Drum Cartridge, PL 8.1 Item 1. Use a dry, lint free cloth to clean the rear side of the Drum Cartridge. Refer to Figure 2. Reinstall the Drum Cartridge. Make a copy from the document glass. **The image quality defect persists.**

Y N

Perform SCP 5 Final Actions.

Print a test pattern. **The image quality defect persists.**

Y N

Install a new IIT assembly, PL 21.1 Item 14.

Switch off the machine, GP 10. Use a dry, lint free cloth to clean the ROS window. Switch on the machine. Print a test pattern. **The image quality defect persists.**

Y N

Perform SCP 5 Final Actions.

Remove the CRU transfer roller assembly, PL 6.1 Item 1. Check for surface contamination or excessive wear, ensure the transfer roller is correctly seated. **The transfer roller is good.**

Y N

Install a new CRU transfer roller assembly, PL 6.1 Item 1.

Check the BTR plate spring on the HVPS, PL 18.2 Item 5. **The plate spring is clean and undamaged.**

Y N

As necessary, clean the plate spring or install a new HVPS, PL 18.2 Item 5.

Remove the Drum Cartridge, PL 8.1 Item 1. Refer to Wiring Diagram 8. Check the BCR and DB spring connectors on the HVPS, PL 18.2 Item 5. **The spring connectors are clean and undamaged.**

Y N

As necessary, clean the spring connectors or install a new HVPS, PL 18.2 Item 5.

Remove the fuser unit, PL 7.1 Item 1. Check the fuser rolls for contamination. **The fuser rolls are clean.**

Y N

Clean the fuser rolls. If necessary, install a new fuser assembly, PL 7.1 Item 1.

Install a new ROS unit, PL 2.1 Item 4.

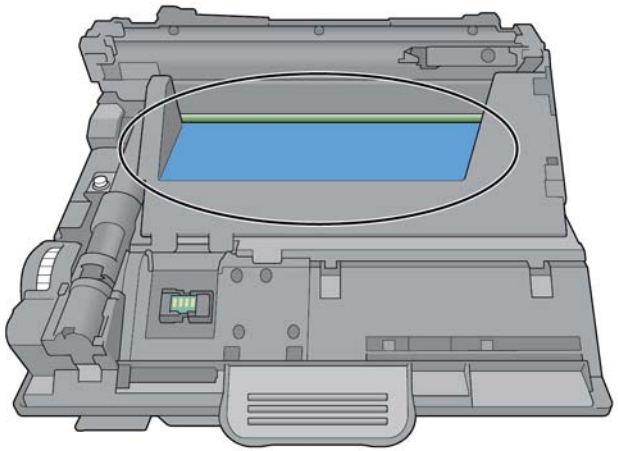

B-1-0325-A

Figure 2 Drum cartridge

IQ10 Ghosting RAP

The residual image from a previous print, or previous pager in the same print job appears on the current print, Figure 1.

B-1-0311-A

Figure 1 Ghosting

Initial Actions

WARNING

Ensure that the electricity to the machine is switched off while performing tasks that do not need electricity. Refer to GP 10. Disconnect the power cord. Electricity can cause death or injury. Moving parts can cause injury.

WARNING

Do not touch the fuser while it is hot.

- Ensure the green fuser nip release levers are in the locked position.
- Identify the type of ghosting, refer to Figure 2. If the ghosting is positive, increase the transfer voltage. If the ghosting is negative, decrease the transfer voltage. Refer to ADJ 1.1 Transfer Adjustment.

Procedure

Remove the CRU transfer roller assembly, PL 6.1 Item 1. Check for surface contamination or excessive wear, ensure the transfer roller is correctly seated. **The transfer roller is good.**

Y **N**

Install a new CRU transfer roller assembly, PL 6.1 Item 1.

Check the BTR plate spring on the HVPS, PL 18.2 Item 5. **The plate spring is clean and undamaged.**

Y N

As necessary, clean the plate spring or install a new HVPS, PL 18.2 Item 5.

Remove the Drum Cartridge, PL 8.1 Item 1. Refer to Wiring Diagram 8. Check the BCR and DB spring connectors on the HVPS, PL 18.2 Item 5. **The spring connectors are clean and undamaged.**

Y N

As necessary, clean the spring connectors or install a new HVPS, PL 18.2 Item 5.

Remove the fuser unit, PL 7.1 Item 1. Check the fuser rolls for contamination. **The fuser rolls are clean.**

Y N

Clean the fuser rolls. If necessary, install a new fuser assembly, PL 7.1 Item 1.

Install a new CRU transfer roller assembly, PL 6.1 Item 1.

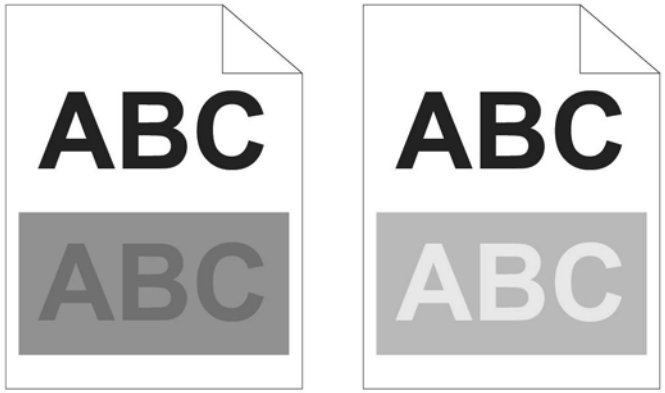

B-1-0327-A

Figure 2 Ghosting type

IQ11 Light Induced Fatigue RAP

Light fatigue pattern appearing across image, Figure 1.

B-1-0312-A

Figure 1 Light induced fatigue

Procedure

WARNING

Ensure that the electricity to the machine is switched off while performing tasks that do not need electricity. Refer to GP 10. Disconnect the power cord. Electricity can cause death or injury. Moving parts can cause injury.

Install a new Drum Cartridge, PL 8.1 Item 1.

IQ12 Fog, Background Contamination RAP

There is toner contamination on all or part of the page, Figure 1. The contamination appears as a very light dusting or fog.

B-1-0313-A

Figure 1 Background defect

Initial Actions

WARNING

Ensure that the electricity to the machine is switched off while performing tasks that do not need electricity. Refer to GP 10. Disconnect the power cord. Electricity can cause death or injury. Moving parts can cause injury.

WARNING

Do not touch the fuser while it is hot.

- Some glossy media or photo paper will exhibit high background. If the issue only occurs on a particular media, advise the customer to use a different brand.
- Ensure all covers and doors are in place and no outside light is entering the machine.

Procedure

Check the ATC sensor contact point on the Drum Cartridge, PL 8.1 Item 1 and the xerographic connector assembly, PL 5.1 Item 10. **The contact point is good.**

Y N

Install new components as necessary:

- Drum Cartridge, PL 8.1 Item 1.
- Xerographic connector assembly, PL 5.1 Item 10.

A

Ensure that all connectors on the HVPS, PL 18.2 Item 5 are securely connected. **The connections are good.**

Y N

Securely connect the connectors. If necessary, install a new HVPS, PL 18.2 Item 5.

Install new components as necessary:

- Drum Cartridge, PL 8.1 Item 1.
- Xerographic connector assembly, PL 5.1 Item 10.
- HVPS, PL 18.2 Item 5.

IQ13 Bead Carry-Out RAP

Multiple dots appearing across image, Figure 1.

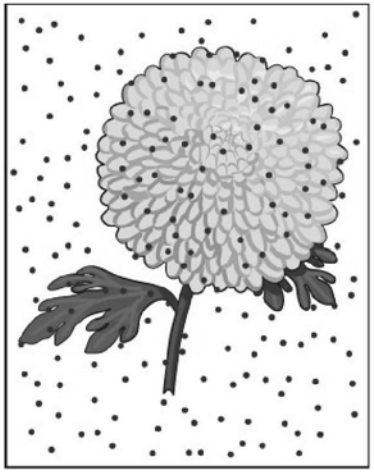

B-1-0314-A

Figure 1 Bead carry-out

Procedure

WARNING

Ensure that the electricity to the machine is switched off while performing tasks that do not need electricity. Refer to GP 10. Disconnect the power cord. Electricity can cause death or injury. Moving parts can cause injury.

WARNING

Do not touch the fuser while it is hot.

Ensure that all connectors on the HVPS, PL 18.2 Item 5 are securely connected. **The connections are good.**

Y N

Securely connect the connectors. If necessary, install a new HVPS, PL 18.2 Item 5.

Install new components as necessary:

- Drum Cartridge, PL 8.1 Item 1.
- HVPS, PL 18.2 Item 5.

IQ14 Jagged Characters RAP

Text in image is fuzzy or blurry, Figure 1.

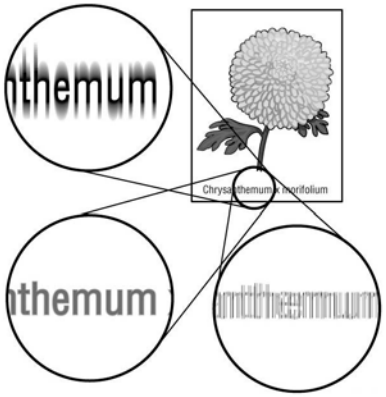

B-1-0315-A

Figure 1 Jagged characters

Procedure

WARNING

Ensure that the electricity to the machine is switched off while performing tasks that do not need electricity. Refer to GP 10. Disconnect the power cord. Electricity can cause death or injury. Moving parts can cause injury.

WARNING

Do not touch the fuser while it is hot.

Perform the steps that follow:

1. Refer to Wiring Diagram 7. Ensure PJ18 is securely connected to the MCU PWB.
2. If necessary, install a ROS unit, PL 2.1 Item 4.

IQ15 Cross Process Bands RAP

Use this procedure to correct defects that appear as areas of cross process bands, Figure 1.

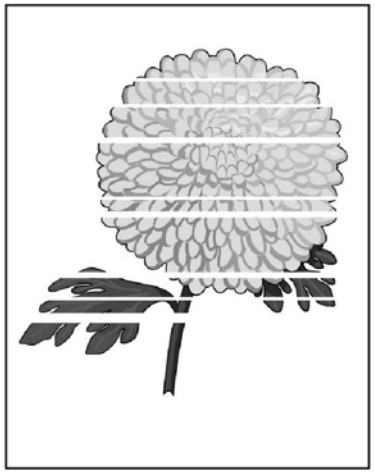

B-1-0316-A

Figure 1 Cross process bands

Procedure

WARNING

Ensure that the electricity to the machine is switched off while performing tasks that do not need electricity. Refer to GP 10. Disconnect the power cord. Electricity can cause death or injury. Moving parts can cause injury.

WARNING

Do not touch the fuser while it is hot.

Print a test pattern. **Cross process bands are visible on the test pattern.**

Y N

Clean the document glass. If the fault persists, install a new IIT assembly, PL 21.1 Item 14.

Print test pattern 63, Pitch Confirmation. **The cause of the image quality defect can be determined from the test pattern.**

Y N

Remove the CRU transfer roller assembly, PL 6.1 Item 1. Check for surface contamination or excessive wear, ensure the transfer roller is correctly seated. **The transfer roller is good.**

Y N

Install a new CRU transfer roller assembly, PL 6.1 Item 1.

A B

A B

Check the BTR plate spring on the HVPS, PL 18.2 Item 5. **The plate spring is clean and undamaged.**

Y N

As necessary, clean the plate spring or install a new HVPS, PL 18.2 Item 5.

Remove the Drum Cartridge, PL 8.1 Item 1. Refer to Wiring Diagram 8. Check the BCR and DB spring connectors on the HVPS, PL 18.2 Item 5. **The spring connectors are clean and undamaged.**

Y N

As necessary, clean the spring connectors or install a new HVPS, PL 18.2 Item 5.

Remove the fuser unit, PL 7.1 Item 1. Check the fuser rolls for contamination. **The fuser rolls are clean.**

Y N

Clean the fuser rolls. If necessary, install a new fuser assembly, PL 7.1 Item 1.

Install a new components as necessary:

- Main drive assembly, PL 3.1 Item 1.
- ROS unit, PL 2.1 Item 4.
- HVPS, PL 18.2 Item 5.

Clean the relevant component or install new components as necessary.

IQ16 Auger Marks RAP

Auger marks appear across output, Figure 1.

B-1-0317-A

Figure 1 Auger marks

Procedure

WARNING

Ensure that the electricity to the machine is switched off while performing tasks that do not need electricity. Refer to GP 10. Disconnect the power cord. Electricity can cause death or injury. Moving parts can cause injury.

WARNING

Do not touch the fuser while it is hot.

Install a new Drum Cartridge, PL 8.1 Item 1. **The image quality defect persists.**

Y N

Perform SCP 5 Final Actions.

Remove the Drum Cartridge, PL 8.1 Item 1. Refer to Wiring Diagram 8. Check the BCR and DB spring connectors on the HVPS, PL 18.2 Item 5. **The spring connectors are clean and undamaged.**

Y N

As necessary, clean the spring connectors or install a new HVPS, PL 18.2 Item 5.

Check the ATC sensor contact point on the Drum Cartridge, PL 8.1 Item 1 and the xerographic connector assembly, PL 5.1 Item 10. **The contact point is good.**

Y N

Install new components as necessary:

- Drum Cartridge, PL 8.1 Item 1.
- Xerographic connector assembly, PL 5.1 Item 10.

Escalate the problem to 2nd level support.

IQ17 Wrinkled or Stained Paper RAP

Prints are either wrinkled, creased, stained or torn, Figure 1.

B-1-0318-A

Figure 1 Wrinkled paper

Initial Actions

WARNING

Ensure that the electricity to the machine is switched off while performing tasks that do not need electricity. Refer to GP 10. Disconnect the power cord. Electricity can cause death or injury. Moving parts can cause injury.

WARNING

Do not touch the fuser while it is hot.

- If wrinkle is occurring when the customer prints on envelopes, ensure the machines settings are correct for printing on envelopes.

  NOTE: *Wrinkles within 30mm (1.25 inches) of the envelope edge are within specification.*

- Ensure the paper trays are correctly installed.

Procedure

Check the following components for damage or contamination. Clean or install new components as necessary:

- The rolls in the registration feeder transport assembly, PL 15.1A Item 6 (B400) or PL 15.1B Item 6 (B405).
- MSI feed rolls, PL 13.1.
- Tray 1 feed rolls, PL 9.2.
- CRU transfer roller assembly, PL 6.1 Item 1.
- Drum Cartridge, PL 8.1 Item 1.
- As necessary, the rolls in tray 2, 3 or 4, PL 11.2, PL 11.3 and PL 11.4.
- Exit roll assembly and pinch rolls, PL 17.1.
- Fuser unit, PL 7.1 Item 1.

IQ18 Lead Edge Damage RAP

Output has lead edge damage, Figure 1

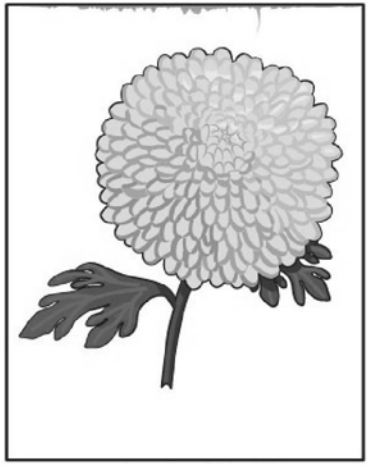

B-1-0319-A

Figure 1 Lead edge damage

Procedure

Perform the IQ17 Wrinkled or Stained Paper RAP.

IQ19 Incorrect Top and Side Margins RAP

Image prints outside of the page margins, Figure 1.

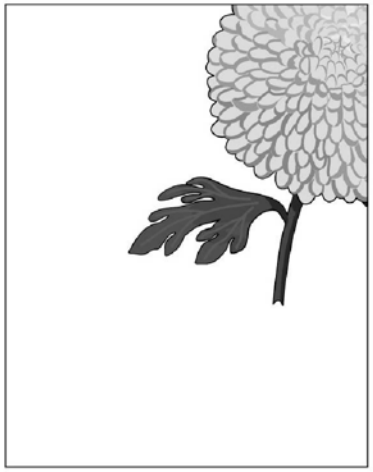

B-1-0320-A

Figure 1 Incorrect margins

Procedure

WARNING

Ensure that the electricity to the machine is switched off while performing tasks that do not need electricity. Refer to GP 10. Disconnect the power cord. Electricity can cause death or injury. Moving parts can cause injury.

The fault only occurs during printing.

Y **N**

The fault only occurs when feeding an original through the DADF.

Y **N**

Install a new IIT assembly, PL 21.1 Item 14.

Check the DADF feed roller assembly, PL 21.1 Item 3. **The feed roller assembly is damaged or contaminated.**

Y **N**

Install a new scanner assembly, PL 21.1 Item 1.

Clean or install a new DADF feed roller assembly as necessary, PL 21.1 Item 3.

Install a new Drum Cartridge, PL 8.1 Item 1. **The image quality defect persists.**

Y **N**

Perform SCP 5 Final Actions.

A

A

Install a new CRU transfer roller assembly, PL 6.1 Item 1. **The image quality defect persists.**

Y **N**

Perform SCP 5 Final Actions.

Install a new ROS unit, PL 2.1 Item 4.

IQ20 Skewed Images RAP

Images are not parallel to the edge of the printed sheet, Figure 1.

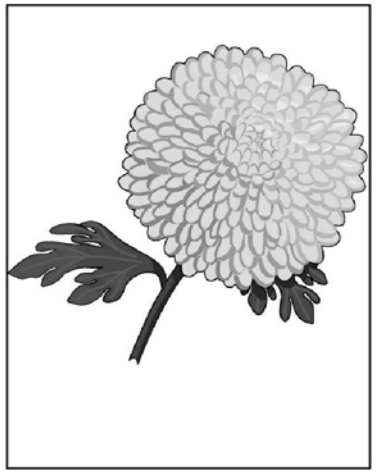

B-1-0321-A

Figure 1 Skewed image

Procedure

WARNING

Ensure that the electricity to the machine is switched off while performing tasks that do not need electricity. Refer to GP 10. Disconnect the power cord. Electricity can cause death or injury. Moving parts can cause injury.

WARNING

Do not touch the fuser while it is hot.

Print a test pattern. **The image is skewed.**

Y **N**

Make a copy from the document glass. **The image is skewed.**

Y **N**

Clean or install a new DADF feed roller assembly as necessary, PL 21.1 Item 3. If the image quality defect persist, install a new IIT assembly, PL 21.1 Item 14.

Install a new scanner assembly, PL 21.1 Item 1.

Check the following components for damage or contamination. Clean or install new components as necessary:

- MSI feed rolls, PL 13.1.
- Tray 1 feed rolls, PL 9.2.
- As necessary, the rolls in tray 2, 3 or 4, PL 11.2, PL 11.3 and PL 11.4.

- The rolls in the registration feeder transport assembly, PL 15.1A Item 6 (B400) or PL 15.1B Item 6 (B405).
- CRU transfer roller assembly, PL 6.1 Item 1.
- Drum Cartridge, PL 8.1 Item 1.
- Fuser unit, PL 7.1 Item 1.

IQ21 Repeating Defects Procedure

Purpose

This is an image quality hardware defects detection procedure. Perform this procedure to identify if one of the following assemblies, xerographic development assembly, PL 8.1, fuser, PL 7.1, transfer assembly PL 6.1, or duplex assembly, PL 14.1, are the cause of horizontal streaks or spots that appear in a constant cycle on defective output prints and copies.

Procedure

1. At the device user interface, enter service mode, GP 1.
2. Touch Device.
3. Touch Support.
4. Touch Support Pages.
5. Touch Repeating Defects.
6. The device will print a Repeating Defects check print.
7. Refer to the instructions on the Repeating Defects check print.

   NOTE: *The repeating defect must be measured accurately to ensure the correct assembly is identified.*

8. Install new components as necessary:
   - Xerographic development assembly, PL 8.1.
   - Fuser assembly, PL 7.1.
   - Transfer belt assembly, PL 6.1.
   - Duplex assembly, PL 14.1.

IQ22 Skew Check

Use this RAP to check the skew for prints and copies.

Procedure

IOT Print Skew

1. Print the test page, Figure 1.
2. Measure from the edge of the paper to the 10mm line at points 1 and 2, then 5 and 6.
3. The skew is the difference between the two measurements for that side.
4. Verify the difference is within the tolerance value as given in Table 1 for IOT (Internal Print).

Copy Skew

1. Print one test page, Figure 1, mark the page **side 1**.
2. Measure from the edge of the paper to the 10mm line at points 1 and 2, then 5 and 6.
3. Copy the page, then mark the copy **side 2**.
4. Measure from the edge of the paper to the 10mm line at points 1 and 2, then 5 and 6.
5. Compare the side 1 and side 2 skew difference. Verify the difference is within the tolerance in Table 1.

Table 1 Copy skew tolerance value

	Flatbed Copy (From Platen)	DADF Copy	IIT Scan from platen to file	IIT + DADF (Scan) Scan to file	IOT (Internal Print)
Lead Edge (180mm edge)	±1.3mm	±2.7mm	±0.6mm	±2.4mm	±1.1mm
Side Edge (280mm edge)	±2.2mm	±3.5mm	±0.9mm	±2.8mm	±2.0mm

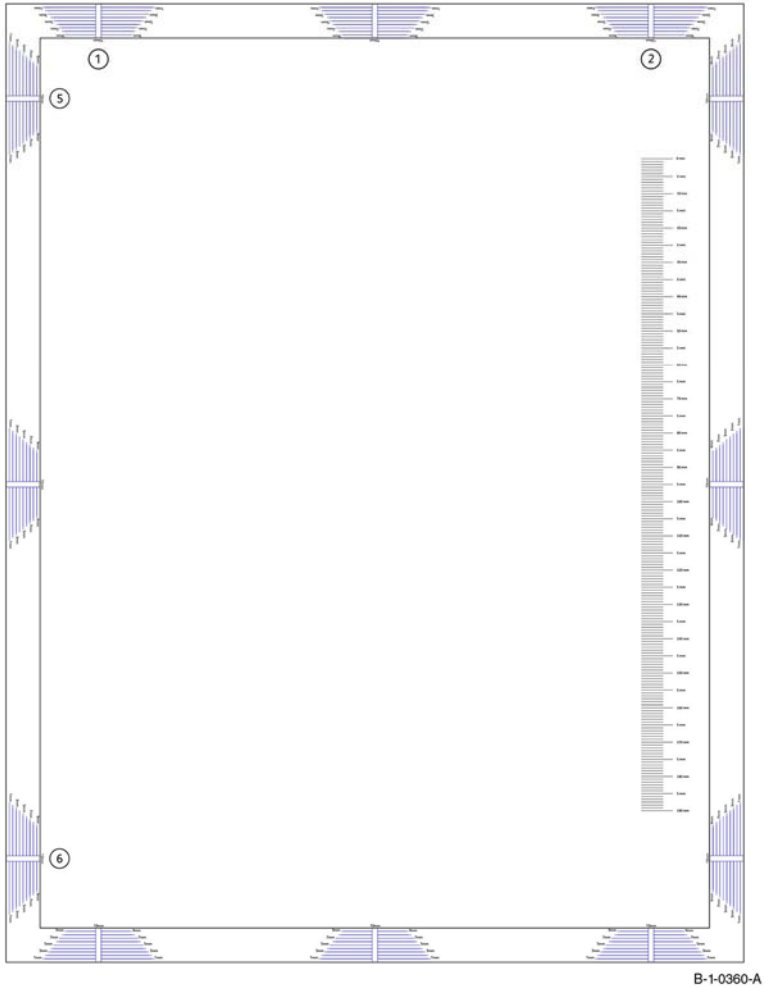

Figure 1 Skew Check

IQ23 Registration Check

Use this RAP to check the registration for prints and copies.

Procedure

IOT Print Registration

1. Print one test page, Figure 1.
2. Measure the print from the edge of the paper to the 10mm line at points 3 and 4.
3. The registration is the difference between the points 3 and 4.
4. Make sure that the difference is within the tolerance value as given in Table 1 for IOT (Internal Print).

Copy Registration

1. Print one test page, Figure 1, mark the page **side 1**.
2. Measure the print from the edge of the paper to the 10mm line at points 3 and 4.
3. Copy the page, then mark the copy **side 2**.
4. Measure the print from the edge of the paper to the 10mm line at points 3 and 4.
5. Compare the side 1 and side 2 registration difference. Verify the difference is within the tolerance in Table 1.

Table 1 Copy registration tolerance value

	Flatbed Copy (From Platen)	DADF Copy	IIT Scan from platen to file	IIT + DADF (Scan) Scan to file	IOT (Internal Print)
Lead Edge (180mm edge) regis-tration	±2.3mm	±2.9mm	±1.0mm	±2.0mm	±2.0mm
Side Edge (280mm edge) Registration	±2.7mm	±3.0mm	±1.0mm	±1.5mm	±2.5mm

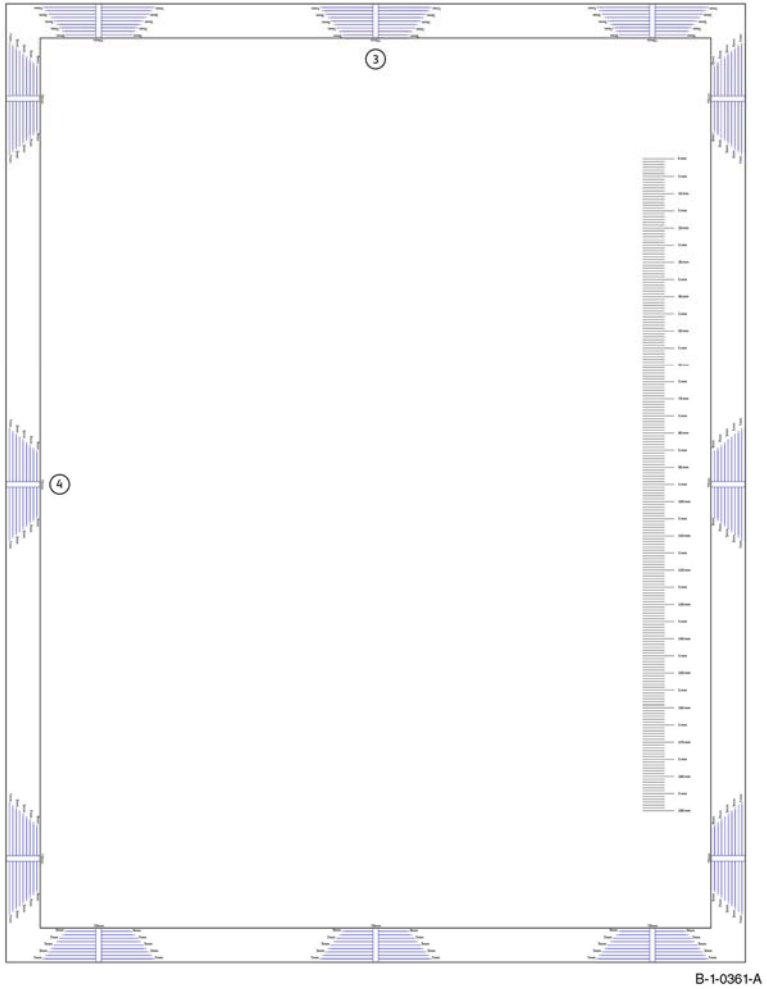

Figure 1 Registration Check

4 Repairs / Adjustments

REPs 1 - UI

REP 1.1 UI Access Door, UI Console Assembly, ICCR Cover, UI Top Cover, IIT Front Top Cover, IIT Left Cover B405 4-3
REP 1.2 UI Harness Assembly, UI Speaker, UI Bottom Frame B405 4-5
REP 1.3 UI Console Assembly B400 4-8
REP 1.4 UI Front Cover, UI Left Cover B400 4-9
REP 1.5 UI Speaker B400 4-10
REP 1.6 UI Harness Assembly B400 4-11

REPs 2 - ROS

REP 2.1 ROS Assembly B405 4-13
REP 2.2 ROS Assembly B400 4-15

REPs 3 - Drive

REP 3.1 Main Drive Assembly B405 4-17
REP 3.2 Main Drive Assembly B400 4-18
REP 3.3 T24 Inverter Clutch Assembly, Exit Out Drive Holder Assembly B405 4-20
REP 3.4 T24 Inverter Clutch Assembly, Exit Out Drive Holder Assembly B400 4-24
REP 3.5 T21 Exit Clutch Assembly, Exit In Drive Holder Assembly B405 4-28
REP 3.6 T21 Exit Clutch Assembly, Exit In Drive Holder Assembly B400 4-32
REP 3.7 Duplex in Gear B405 4-36
REP 3.8 Duplex in Gear B400 4-37

REPs 4 - NOHAD

REP 4.1 Front Right Link, Right Link Shaft, Connector Link B405 4-39
REP 4.2 Front Right Link, Right Link Shaft, Link Connector B400 4-40
REP 4.3 Front Left Link, Left Link Shaft, Connector Link B405 4-41
REP 4.4 Front Left Link, Left Link Shaft, Connector Link B400 4-44

REPs 5 - Dispenser

REP 5.1 CRUM Housing Assembly B405 4-47
REP 5.2 CRUM Housing Assembly B400 4-49
REP 5.3 Dispenser Drive Assembly B405 4-51
REP 5.4 Dispenser Drive Assembly B400 4-53
REP 5.5 Dispenser Motor B405 4-54
REP 5.6 Dispenser Motor B400 4-56
REP 5.7 Xerographic Connector Assembly B405 4-59
REP 5.8 Xerographic Connector Assembly B400 4-60

REPs 6 - Transfer

REP 6.1 CRU Transfer Roller Assembly B405 4-61
REP 6.2 CRU Transfer Roller Assembly B400 4-61

REPs 7 - Fusing

REP 7.1 Fuser B405 4-63
REP 7.2 Fuser B400 4-63

REPs 8 - Xerographics

REP 8.1 Drum Cartridge B405 4-65
REP 8.2 Drum Cartridge B400 4-66

REPs 9 - Tray 1

REP 9.1 Retard Holder Assembly B405 4-67
REP 9.2 Retard Holder Assembly B400 4-67
REP 9.3 Feed Roll Assembly B405 4-68
REP 9.4 Feed Roll Assembly B400 4-68
REP 9.5 Tray 1 Lock Spring 4-69

REPs 11 - Option Feeder

REP 11.1 Option Feeder Assembly B405 4-71
REP 11.2 Option Feeder Assembly B400 4-72
REP 11.3 Option Feeder Left Cover B405 4-72
REP 11.4 Option Feeder Left Cover B400 4-73
REP 11.5 Option Feeder PWB Assembly B405 4-73
REP 11.6 Option Feeder PWB Assembly B400 4-74
REP 11.7 Option Feeder Right Cover B405 4-75
REP 11.8 Option Feeder Right Cover B400 4-76
REP 11.9 Option Feeder Rear Cover B405 4-77
REP 11.10 Option Feeder Rear Cover B400 4-78
REP 11.11 Option Feeder Motor Assembly B405 4-79
REP 11.12 Option Feeder Motor Assembly B400 4-81
REP 11.13 Option Feeder B405 4-82
REP 11.14 Option Feeder B400 4-84
REP 11.15 Option Feeder Clutch Assembly B405 4-85
REP 11.16 Option Feeder Clutch Assembly B400 4-86
REP 11.17 Option Feeder Feed Roll Assembly B405 4-87
REP 11.18 Option Feeder Feed Roll Assembly B400 4-88
REP 11.19 Option Feeder Takeaway Clutch Assembly B405 4-89
REP 11.20 Option Feeder Takeaway Clutch Assembly B400 4-90
REP 11.21 Option Feeder No Paper Sensor B405 4-91
REP 11.22 Option Feeder No Paper Sensor B400 4-92
REP 11.23 Option Feeder Path Sensor B405 4-93
REP 11.24 Option Feeder Path Sensor B400 4-94
REP 11.25 Option Feeder No Paper Actuator B405 4-94
REP 11.26 Option Feeder No Paper Actuator B400 4-95
REP 11.27 Option Feeder Take Away Roll Assembly B405 4-95
REP 11.28 Option Feeder Takeaway Roll Assembly B400 4-96
REP 11.29 Option Feeder Tray Lock Spring 4-96

REPs 13 - MSI

REP 13.1 MSI Retard Roll Assembly, MSI Cover B405 4-99
REP 13.2 MSI Retard Roll Assembly, MSI Cover B400 4-100
REP 13.3 MSI Feed Solenoid B405 4-101
REP 13.4 MSI Feed Solenoid B400 4-103
REP 13.5 Pick Up Holder Assembly B405 4-105
REP 13.6 Pick Up Holder Assembly B400 4-106

REPs 14 - Duplex

REP 14.1 Duplex Chute Assembly B405 4-107
REP 14.2 Duplex Chute Assembly B400 4-108

REPs 15 - Registration

REP 15.1 Registration Transport Assembly B405 4-109
REP 15.2 Registration Transport Assembly B400 4-115
REP 15.3 Rear Interlock Switch Assembly B405 4-122
REP 15.4 Rear Interlock Switch Assembly B400 4-125
REP 15.5 Feed Roll Assembly B405 4-128
REP 15.6 Feed Roll Assembly B400 4-129
REP 15.7 Feeder Assembly B405 4-130
REP 15.8 Feeder Assembly B400 4-131
REP 15.9 Rubber Roll Assembly, Registration Clutch B405 4-133
REP 15.10 Rubber Roll Assembly, Registration Clutch B400 4-135

REPs 17 - Exit

REP 17.1 Exit Roll Assembly B405 4-139
REP 17.2 Exit Roll Assembly, Exit Chute Assembly B400 4-140
REP 17.3 Left and Right Pinch Assembly B405 4-141
REP 17.4 Left and Right Pinch Assembly B400 4-142
REP 17.5 Exit Chute Assembly B405 4-143

REPs 18 - Electrical

REP 18.1 ESS PWB Assembly B405 4-147
REP 18.2 ESS PWB Assembly B400 4-150
REP 18.3 MCU PWB Assembly B405 4-153
REP 18.4 MCU PWB Assembly B400 4-154
REP 18.5 HVPS B405 4-156
REP 18.6 HVPS B400 4-157
REP 18.7 LVPS PWB B405 4-159
REP 18.8 LVPS PWB B400 4-160
REP 18.9 Front USB Harness B405 4-161
REP 18.10 Front USB Harness B400 4-162
REP 18.11 Inlet Harness Assembly B405 4-164
REP 18.12 Inlet Harness Assembly B400 4-165
REP 18.13 Front Interlock Switch Assembly B405 4-167
REP 18.14 Front Interlock Switch Assembly B400 4-168
REP 18.15 Hard Disk Drive (HDD) 4-169

REPs 19 - Covers

REP 19.1 Front Cover Assembly B405 4-171
REP 19.2 Front Cover Assembly B400 4-172
REP 19.3 ESS Window Cover Assembly B405 4-173
REP 19.4 ESS Window Cover Assembly B400 4-173
REP 19.5 Cover Extension B405 4-174
REP 19.6 Cover Extension B400 4-175
REP 19.7 Right Cover B405 4-176
REP 19.8 Right Cover B400 4-177
REP 19.9 Exit Top Cover Assembly B405 4-178
REP 19.10 Exit Top Cover Assembly B400 4-179
REP 19.11 Left Cover B405 4-180
REP 19.12 Left Cover B400 4-181
REP 19.13 Rear-Cover Assembly B405 4-182
REP 19.14 Rear-Cover Assembly B400 4-183
REP 19.15 Rear Fan B405 4-185
REP 19.16 Rear Fan B400 4-186
REP 19.17 Rear Under Cover B405 4-188
REP 19.18 Rear Under Cover B400 4-189
REP 19.19 WiFi Cap Cover B405 4-190
REP 19.20 WiFi Cap Cover B400 4-190

REPs 21 - Scanner

REP 21.1 IIT Assembly B405 4-191
REP 21.2 Left/Right Hinge Assembly B405 4-193
REP 21.3 Separation Pad B405 4-194
REP 21.4 DADF Roller Assembly B405 4-195
REP 21.5 DADF Top Cover B405 4-196
REP 21.6 DADF Tray Assembly B405 4-197
REP 21.7 Scanner Front Bottom Cover B405 4-198

ADJs 1 - Adjustments

ADJ 1.1 Transfer Adjustment 4-199
ADJ 1.2 Fuser Adjustment 4-199
ADJ 1.3 Altitude Adjustment 4-200

REP 1.1 UI Access Door, UI Console Assembly, ICCR Cover, UI Top Cover, IIT Front Top Cover, IIT Left Cover B405

Parts List on PL 1.1B and PL 1.2B

Removal

WARNING

Switch off the electricity to the machine, GP 10. Disconnect the power cord from the customer supply while performing tasks that do not need electricity. Electricity can cause death or injury. Moving parts can cause injury.

WARNING

Take care during this procedure. Sharp edges may be present that can cause injury.

1. Remove the left cover, REP 19.11.
2. Remove the IIT left cover, Figure 1.
3. Remove the IIT front top cover, Figure 1.

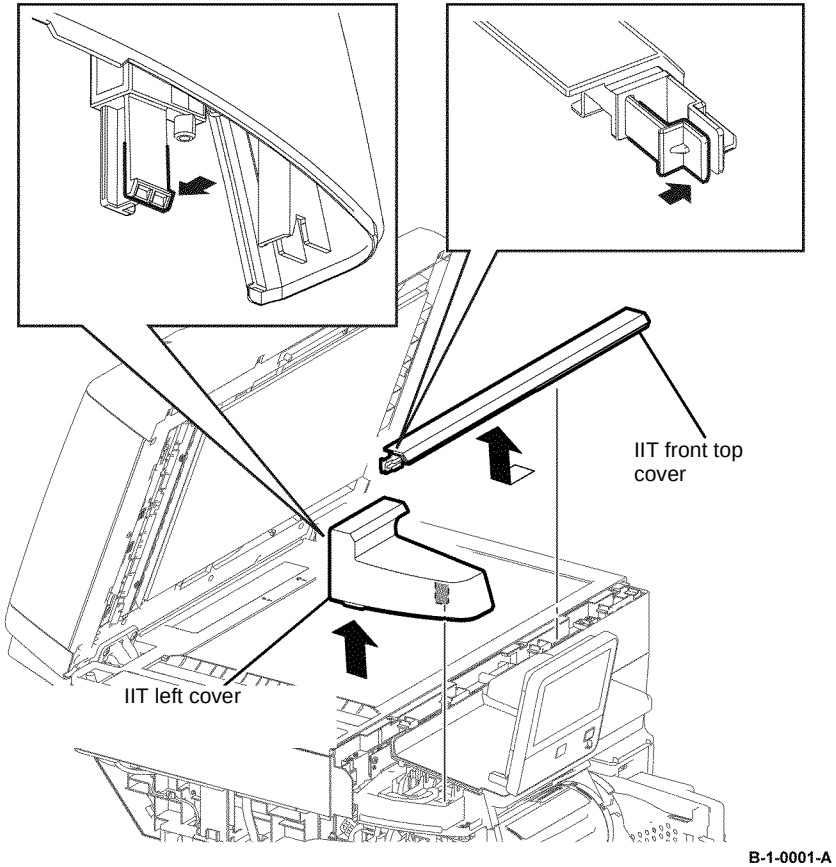

Figure 1 IIT cover removal

4. Remove the ICCR cover, Figure 2.
5. Remove one screw (black, tapping, 6mm), then remove the UI top cover, Figure 2.

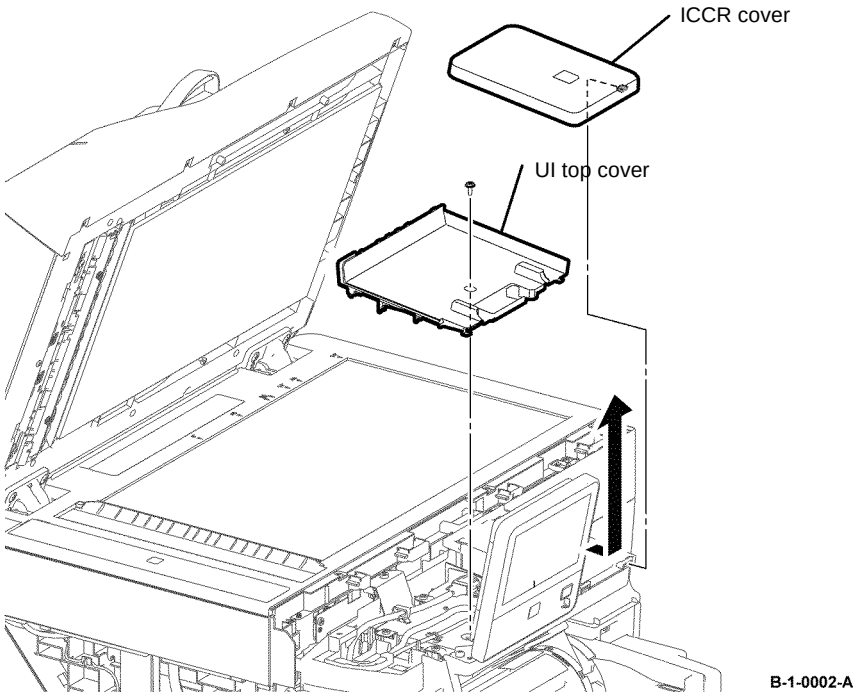

Figure 2 ICCR and UI cover removal

6. Slide the UI access door in the arrowed direction, then remove it from the UI console assembly, Figure 3.
7. Disengage PJ1 of the UI harness assembly, Figure 3.
8. Disengage PJ4 of the UI speaker, Figure 3.
9. Remove two screws (silver, M4, 6mm), then remove the UI console assembly, Figure 3.

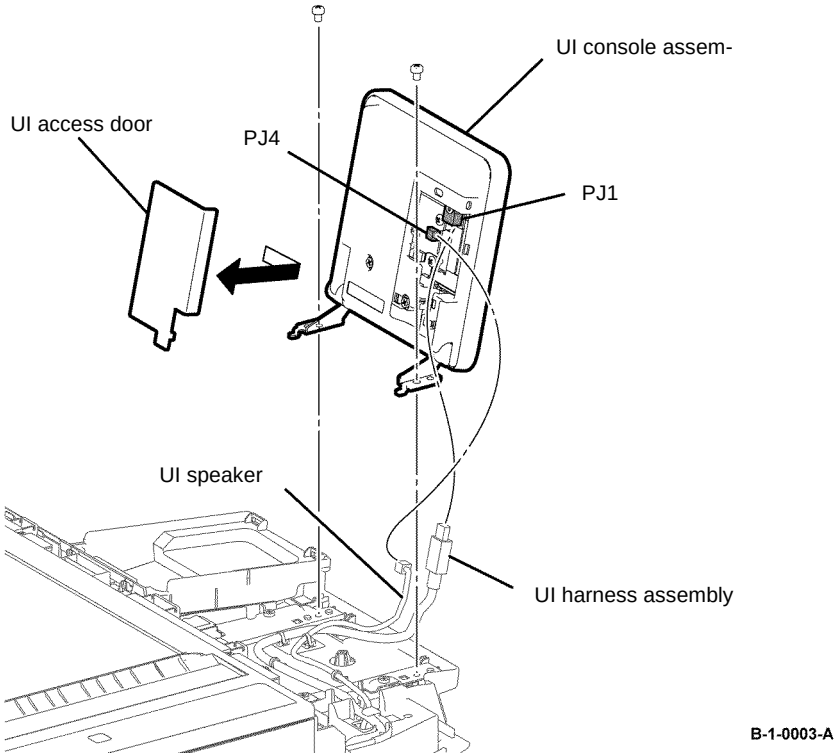

Figure 3 UI console assembly removal

Replacement

The replacement is the reverse of the removal procedure.

REP 1.2 UI Harness Assembly, UI Speaker, UI Bottom Frame B405

Parts List on PL 1.1B and PL 1.2B

Removal

WARNING

Switch off the electricity to the machine, GP 10. Disconnect the power cord from the customer supply while performing tasks that do not need electricity. Electricity can cause death or injury. Moving parts can cause injury.

WARNING

Take care during this procedure. Sharp edges may be present that can cause injury.

1. Open the MSI cover, PL 13.2 Item 3.
2. Pull the MSI tray assembly, PL 13.2 Item 9, out of the printer.
3. Remove the front cover, REP 19.1.
4. Remove the rear cover assembly, REP 19.13.
5. Remove the ESS window cover assembly, REP 19.3.
6. Remove the WIFI cap cover, REP 19.19.
7. Remove the UI access door, UI console assembly, ICCR cover, UI top cover IIT front top cover and IIT left cover, REP 1.1.
8. Remove the left cover, REP 19.11.
9. Remove seven screws (silver, M3, 6mm), then remove the ESS lower window plate and the WIFI release lever, Figure 1.
10. Remove two screws (silver, M3, 6mm), then remove the ESS top plate, Figure 1.

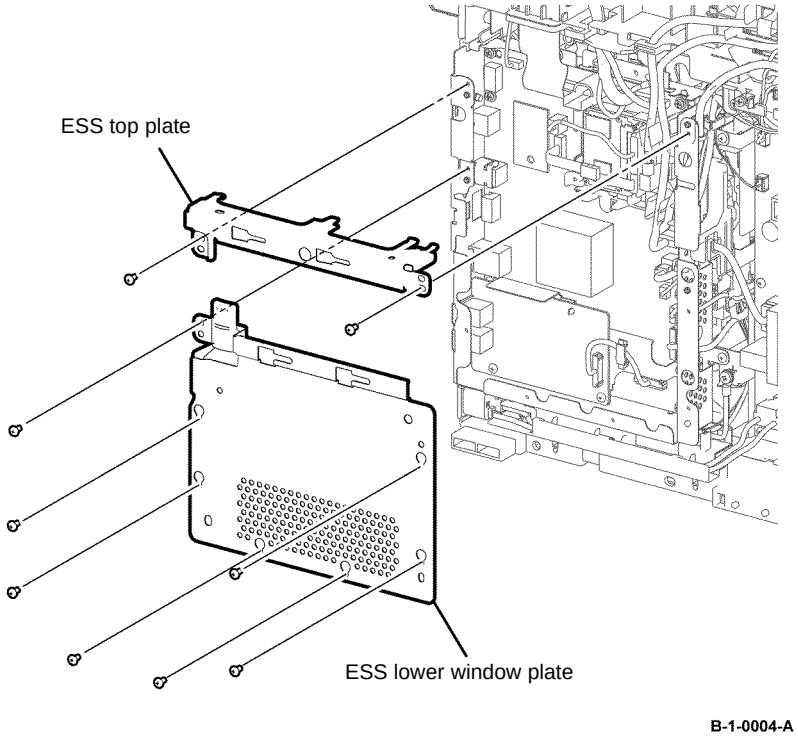

Figure 1 ESS Top and lower plate removal

11. Disengage P/J632, then release the ICCR USB harness from the harness guide, Figure 2.
12. Disengage P/J441, then release the UI harness assembly from the harness guide, Figure 2.

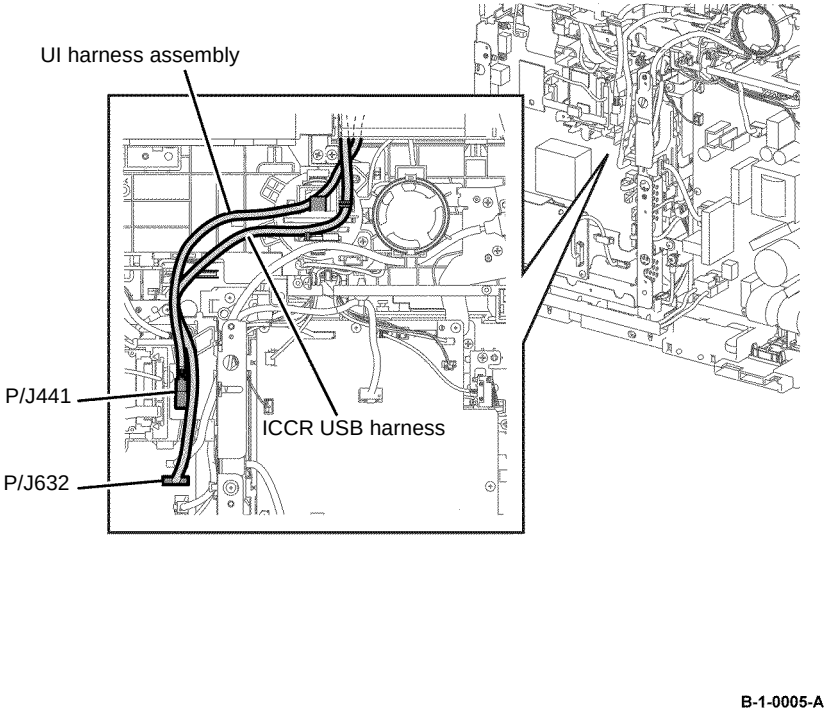

Figure 2 ICCR USB and UI harnesses disengage

13. Release one clamp, remove two screws (silver, M3, 6mm), then remove ICCR USB harness, Figure 3.
14. Release two push ties, then remove the UI harness assembly, Figure 3.

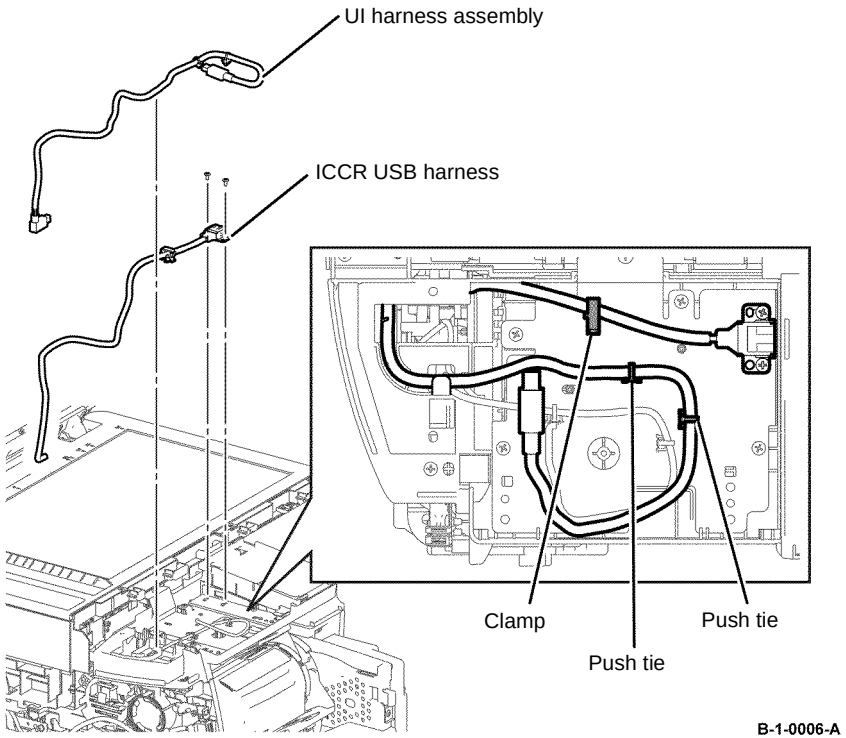

Figure 3 ICCR USB and UI harnesses removal

15. Release the two push ties of the UI speaker, Figure 4.

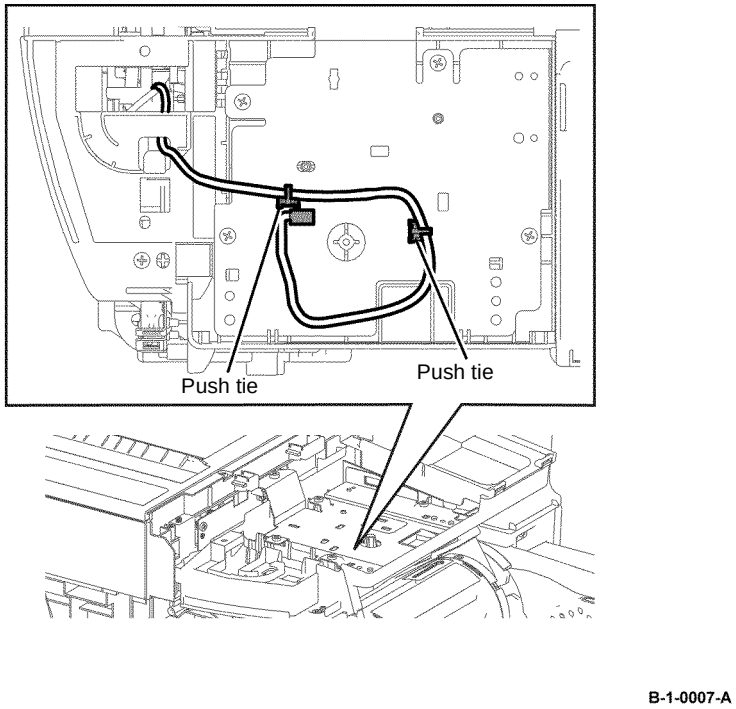

Figure 4 Speaker push ties release

16. Remove one screw (silver, tapping, 8mm), then remove the ICCR inner cover, Figure 5.
17. Remove five screws (silver, tapping, 8mm), then remove the UI bottom frame, Figure 5.

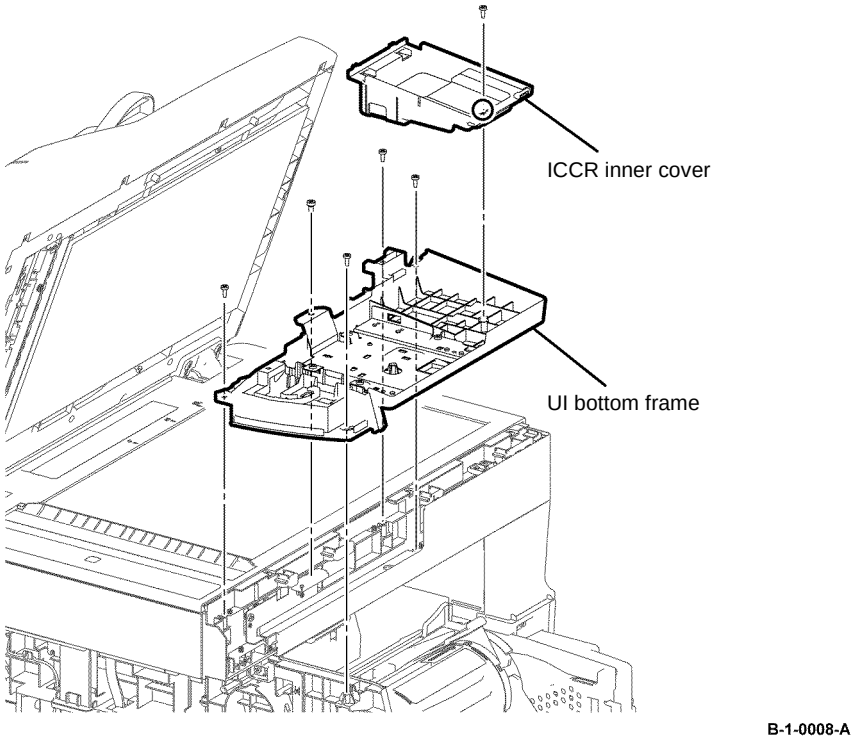

Figure 5 Inner ICCR cover and UI bottom frame removal

Replacement

1. The replacement is the reverse of the removal procedure.
2. If the speaker cover, PL 18.1B Item 20, is accidentally removed. Install the speaker cover, with the LVPS fan harness assembly, the UI speaker and the speaker assembly. Refer to Figure 6.

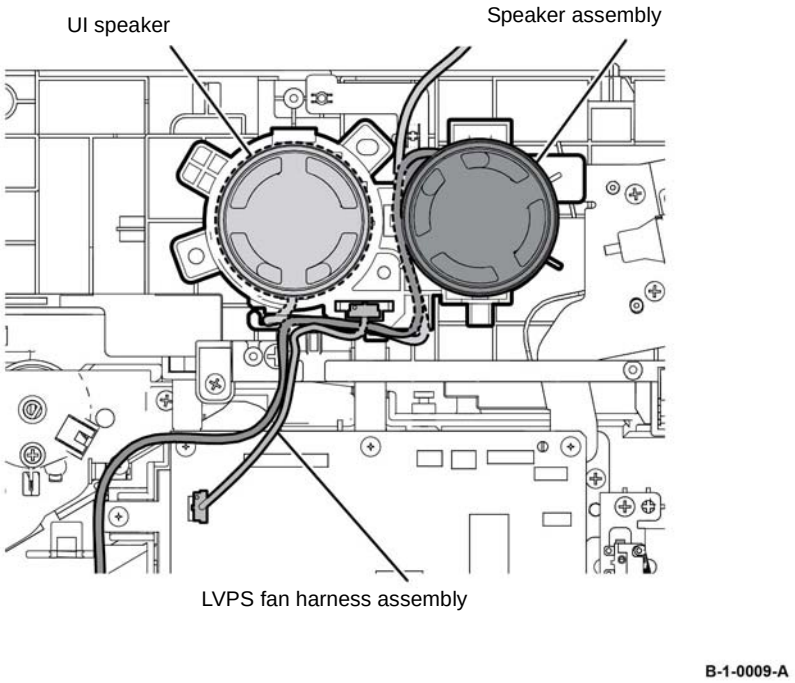

Figure 6 Replacement

REP 1.3 UI Console Assembly B400

Parts List on PL 1.1A and PL 1.2A

Removal

WARNING

Switch off the electricity to the machine, GP 10. Disconnect the power cord from the customer supply while performing tasks that do not need electricity. Electricity can cause death or injury. Moving parts can cause injury.

WARNING

Take care during this procedure. Sharp edges may be present that can cause injury.

1. Remove one screw (black, tapping, 6mm), then remove the UI top cover, Figure 1.

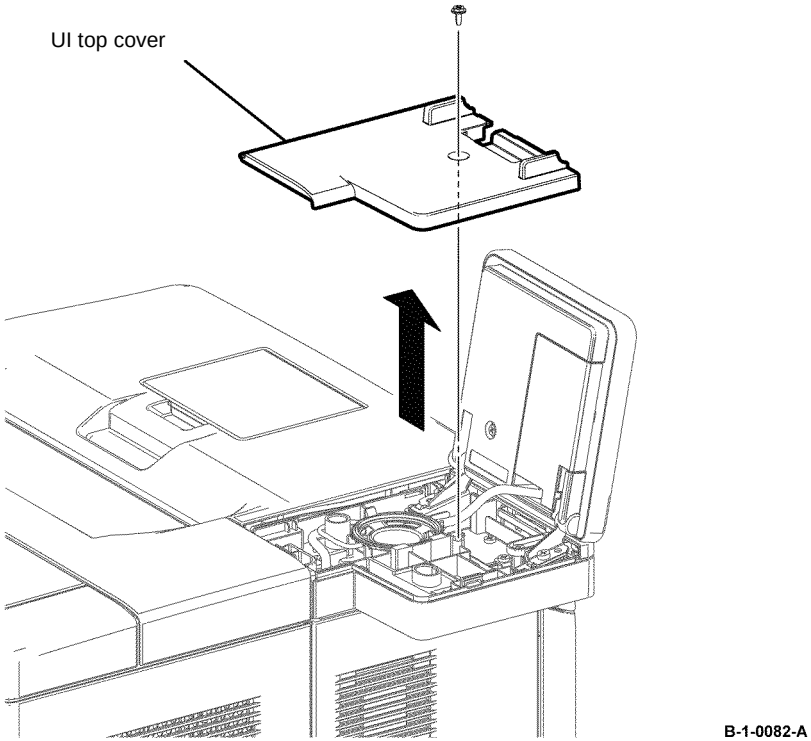

Figure 1 UI Top cover removal

2. Slide the UI access door in the direction shown, then remove it from the UI console assembly, Figure 2.
3. Disengage P/J1 of the UI harness assembly, Figure 2.
4. Disengage P/J4 of the UI speaker, Figure 2.
5. Remove two screws (silver, M4, 6mm), then remove the UI console assembly, Figure 2.

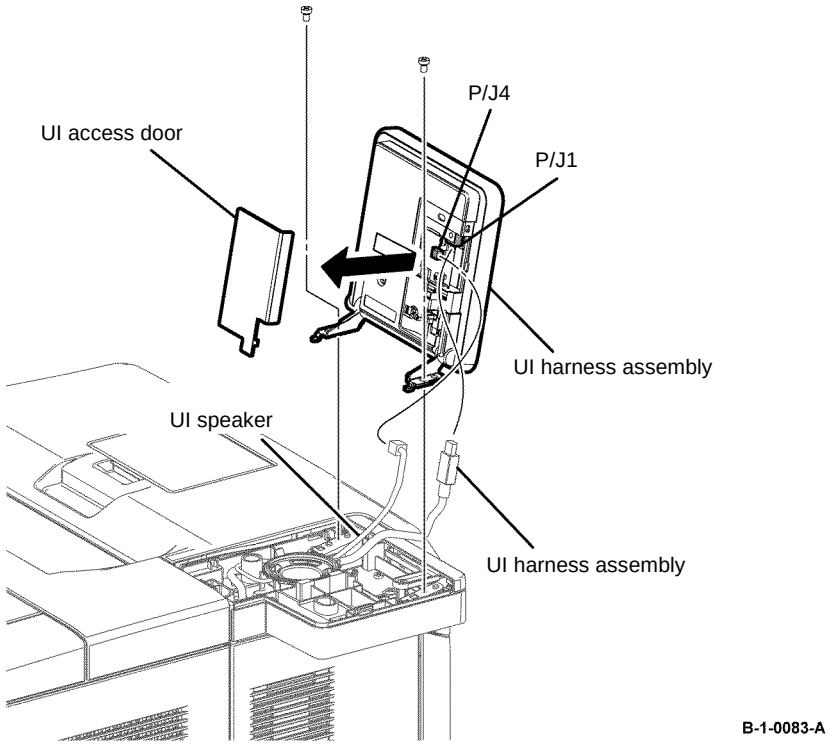

Figure 2 UI console assembly removal

Replacement

The replacement is the reverse of the removal procedure.

REP 1.4 UI Front Cover, UI Left Cover B400

Parts List on PL 1.2A

Removal

WARNING

Switch off the electricity to the machine, GP 10. Disconnect the power cord from the customer supply while performing tasks that do not need electricity. Electricity can cause death or injury. Moving parts can cause injury.

WARNING

Take care during this procedure. Sharp edges may be present that can cause injury.

1. Remove the UI console assembly, REP 1.3.
2. Open the front cover, PL 19.1A Item 2.
3. Remove one screw (silver, tapping, 8mm), then remove the UI front cover, Figure 1.

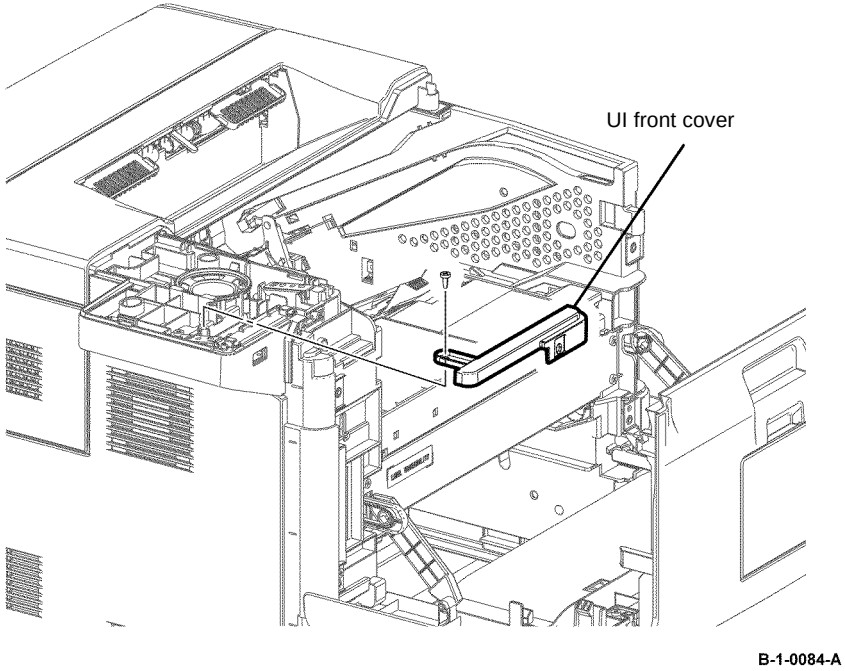

Figure 1 UI front cover removal

4. Remove one screw (silver, tapping, 8mm), then remove the UI left cover, in the arrowed direction, Figure 2.

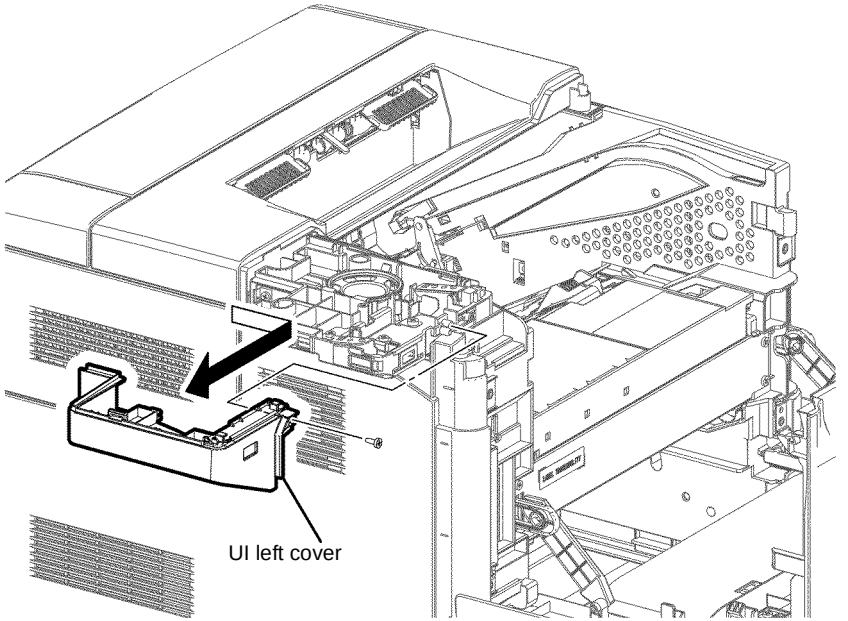

B-1-0085-A

Figure 2 UI left cover removal

Replacement

The replacement is the reverse of the removal procedure.

REP 1.5 UI Speaker B400

Parts List on PL 1.1A

Removal

WARNING

Switch off the electricity to the machine, GP 10. Disconnect the power cord from the customer supply while performing tasks that do not need electricity. Electricity can cause death or injury. Moving parts can cause injury.

WARNING

Take care during this procedure. Sharp edges may be present that can cause injury.

1. Remove the UI console assembly, REP 1.3.
2. Release the hook, then remove the UI speaker, Figure 1.

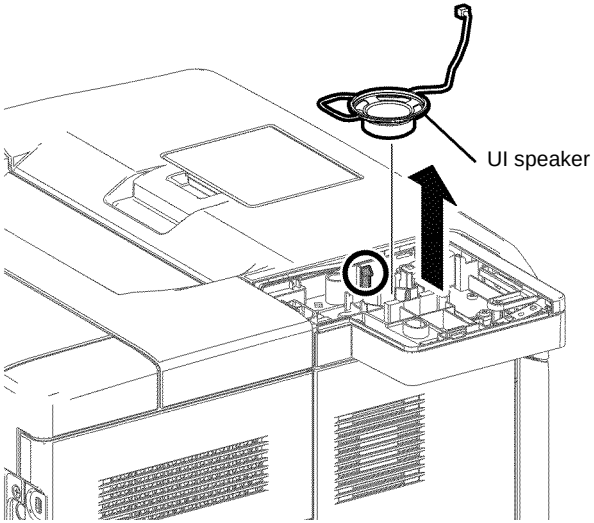

B-1-0086-A

Figure 1 UI speaker removal

Replacement

The replacement is the reverse of the removal procedure.

REP 1.6 UI Harness Assembly B400

Parts List on PL 1.1A

Removal

WARNING

Switch off the electricity to the machine, GP 10. Disconnect the power cord from the customer supply while performing tasks that do not need electricity. Electricity can cause death or injury. Moving parts can cause injury.

WARNING

Take care during this procedure. Sharp edges may be present that can cause injury.

1. Open the MSI cover, PL 13.2 Item 99.
2. Pull the MSI tray assembly, PL 13.2 Item 9, out of the printer.
3. Remove the UI console assembly, REP 1.3.
4. Remove the front/left UI cover assembly, REP 1.4.
5. Remove the front cover assembly, REP 19.2.
6. Remove the rear cover assembly, REP 19.14.
7. Remove the exit top cover assembly, REP 19.10.
8. Remove the WIFI cap cover, REP 19.20.
9. Remove the ESS window cover assembly, REP 19.4.
10. Remove the left cover assembly, REP 19.12.
11. Remove seven screws (silver, M3, 6mm), then remove the ESS lower window plate and WIFI release lever, Figure 1.
12. Remove two screws (silver, M3, 6mm), then remove the ESS top plate, Figure 1.

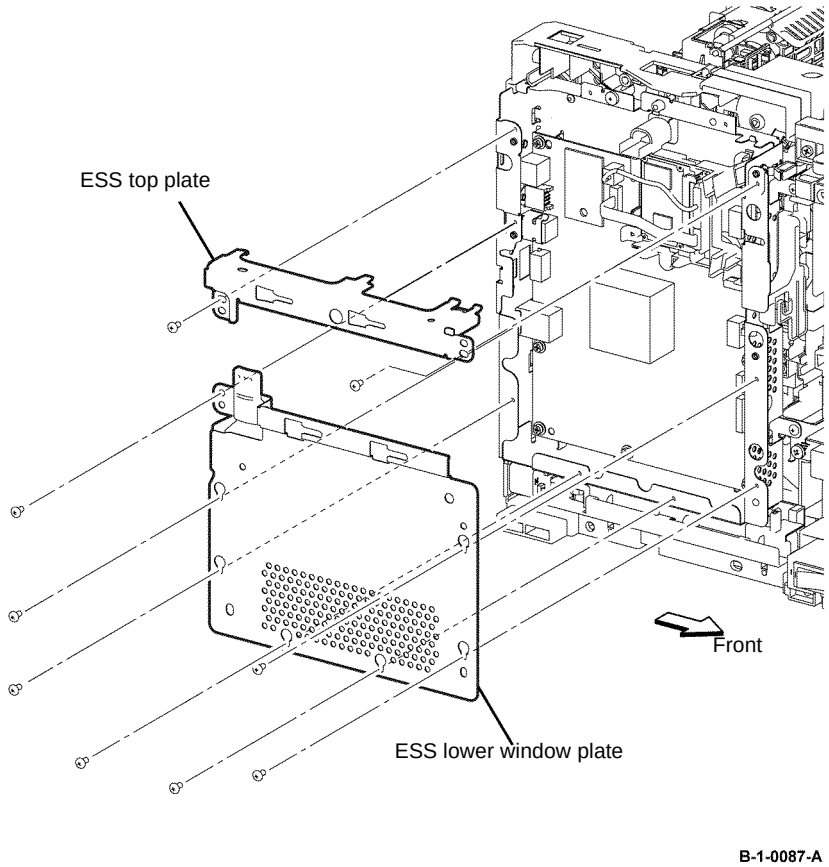

Figure 1 ESS top and lower window plate removal

13. Disengage P/J631, then release the harness from the HDD bracket, Figure 2.
14. Disengage P/J302 and P/J310, then remove the optional HDD, Figure 2.
15. Remove one screw (silver, M3, 6mm), then release the three bosses to remove the HDD bracket, Figure 2.

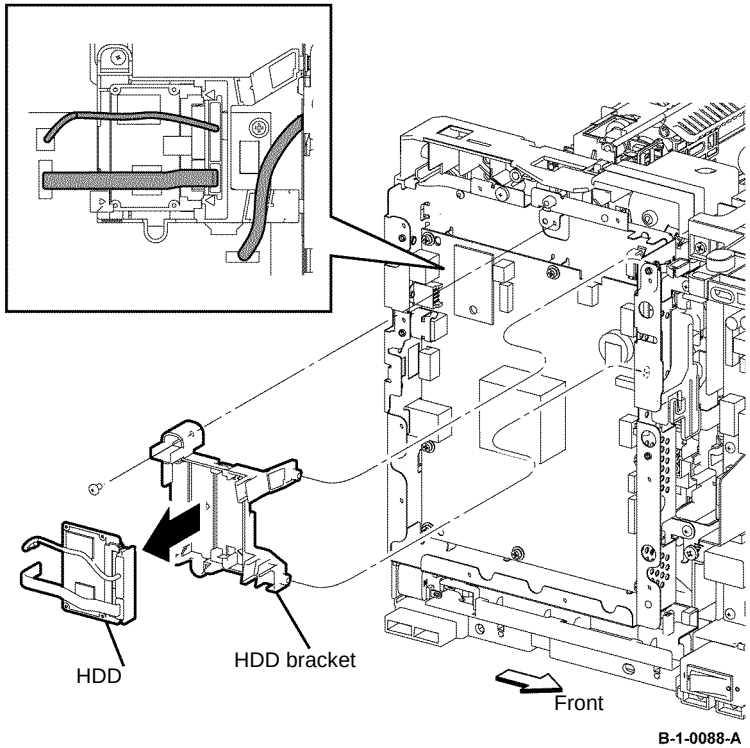

Figure 2 Optional HDD and bracket removal

16. Disengage P/J1362, release one push tie, then remove the UI harness assembly, Figure 3.

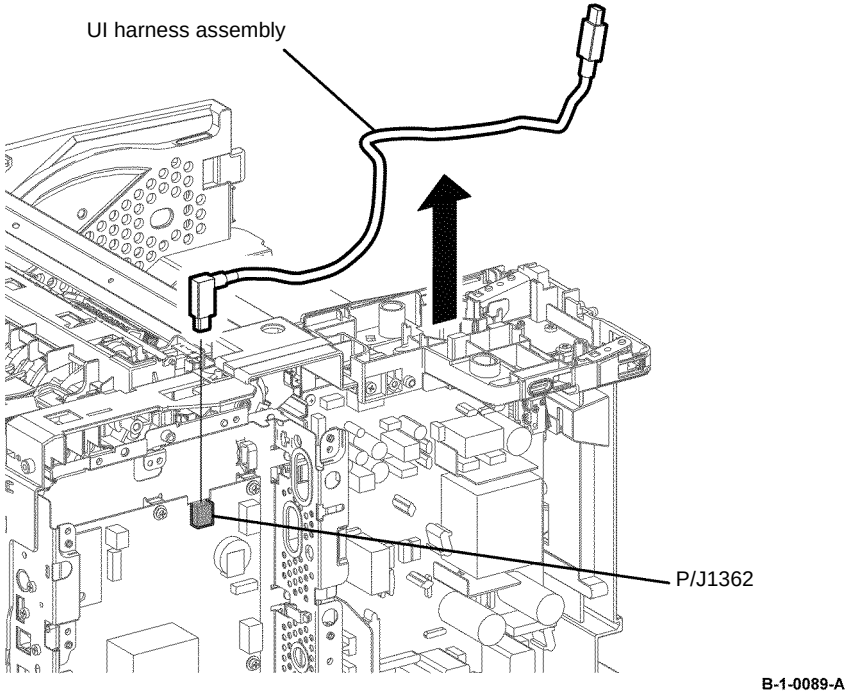

Figure 3 UI harnesses assembly removal

Replacement

The replacement is the reverse of the removal procedure.

REP 2.1 ROS Assembly B405

Parts List on PL 2.1

Removal

WARNING

Switch off the electricity to the machine, GP 10. Disconnect the power cord from the customer supply while performing tasks that do not need electricity. Electricity can cause death or injury. Moving parts can cause injury.

WARNING

Take care during this procedure. Sharp edges may be present that can cause injury.

Figure 1 ESD symbol

CAUTION

Observe ESD procedures during this procedure.

1. Disengage all connectors from the MCU PWB, PL 18.2 Item 2.
2. Disengage P/J253 from the CRUM housing assembly, REP 5.1.
3. Release the harness from the harness guide installed on the MCU housing, PL 18.2 Item 4.
4. Remove two screws (silver, M3, 6mm) that fix the MCU housing, Figure 2.

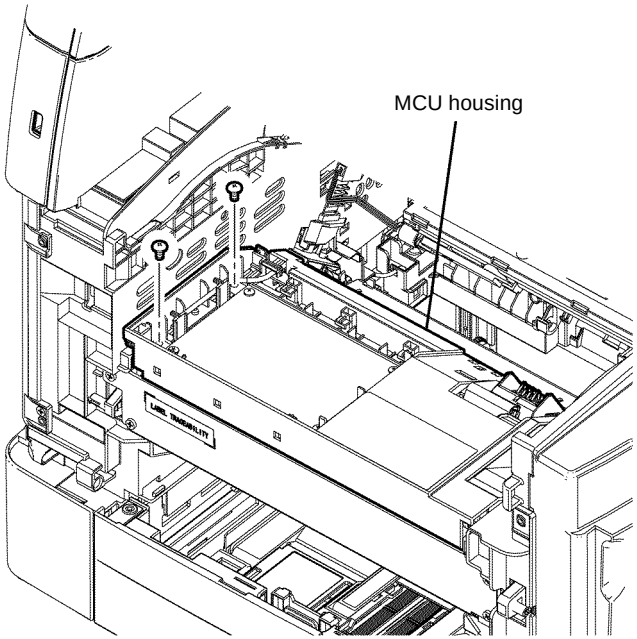

B-10010-A

Figure 2 MCU housing location

5. Rotate the MCU housing in the arrowed direction, release the hook, then remove the MCU housing from the printer, Figure 3.

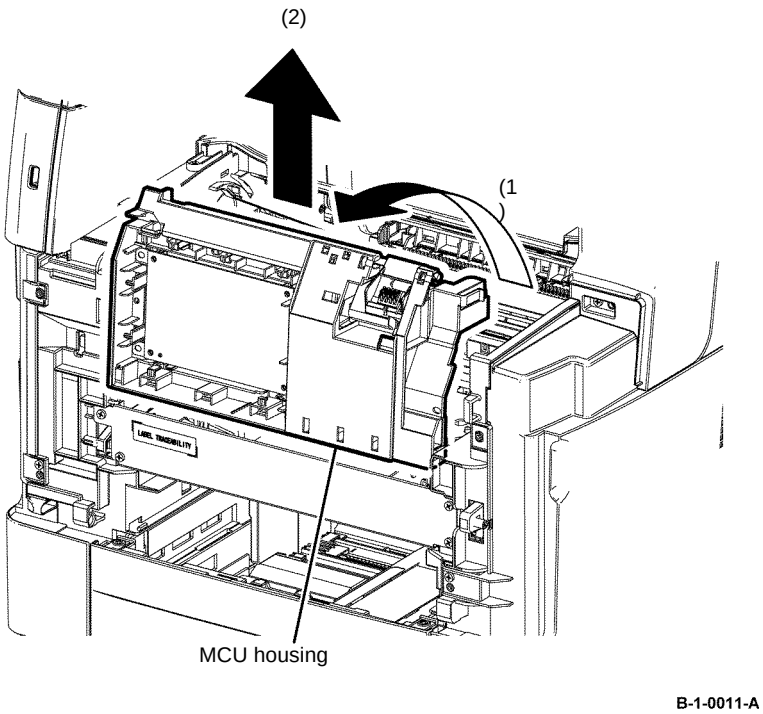

Figure 3 MCU housing removal

6. Remove the four screws (silver, flanged, M3, 10mm) that fix the ROS assembly, disengage PJ502, then remove the ROS assembly from the printer, Figure 4.

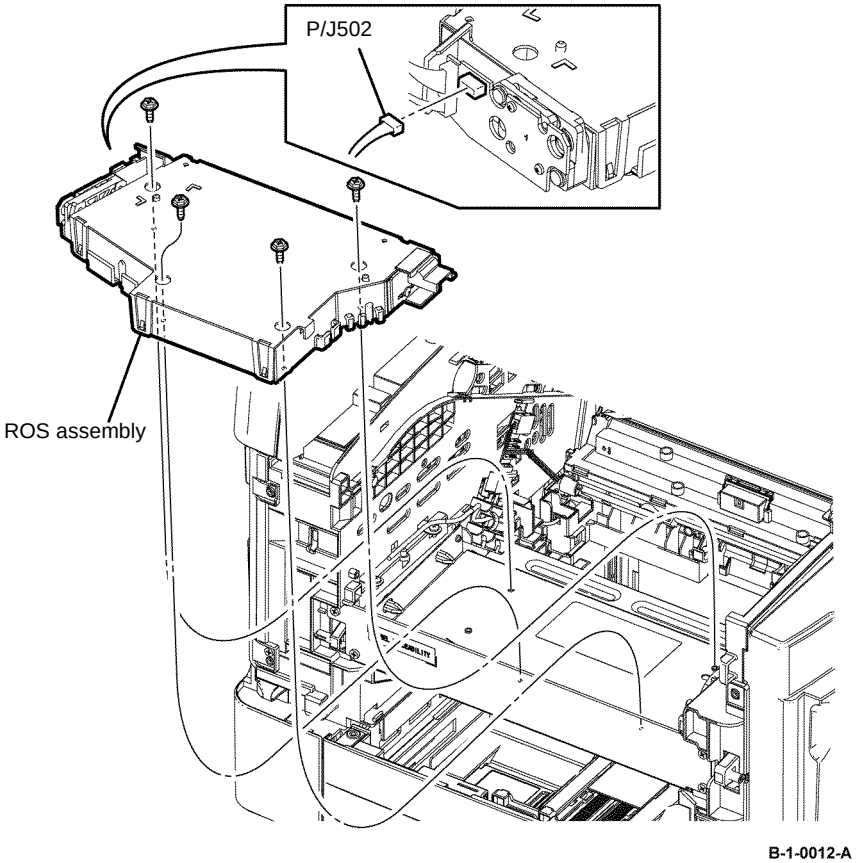

Figure 4 ROS assembly removal

Replacement

The replacement is the reverse of the removal procedure.

REP 2.2 ROS Assembly B400

Parts List on PL 2.1

Removal

WARNING

Switch off the electricity to the machine, GP 10. Disconnect the power cord from the customer supply while performing tasks that do not need electricity. Electricity can cause death or injury. Moving parts can cause injury.

WARNING

Take care during this procedure. Sharp edges may be present that can cause injury.

Figure 1 ESD symbol

CAUTION

Observe ESD procedures during this procedure.

1. Disengage all connectors from the MCU PWB, PL 18.2 Item 2.
2. Disengage P/J253 from the CRUM housing assembly, REP 5.1.
3. Release the harness from the harness guide installed on the MCU housing, PL 18.2 Item 4.
4. Remove two screws (silver, M3, 6mm) that fix the MCU housing, Figure 2.

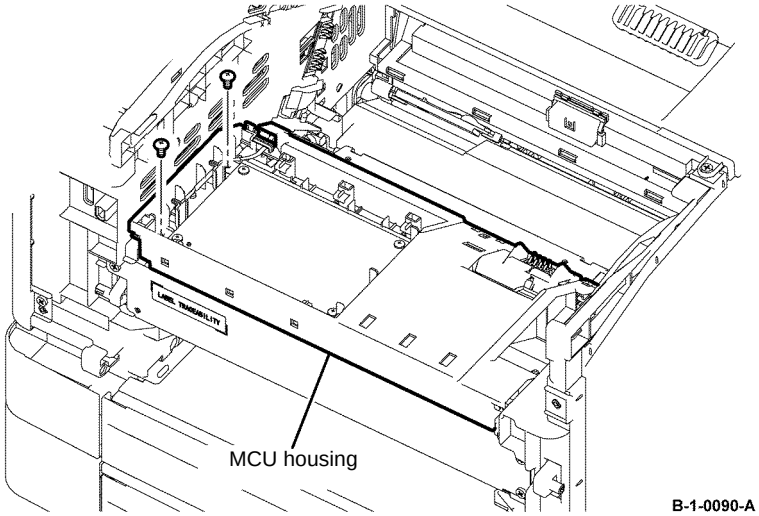

Figure 2 MCU housing location

5. Rotate the MCU housing in the arrowed direction, release the hook, then remove the MCU housing from the printer, Figure 3.

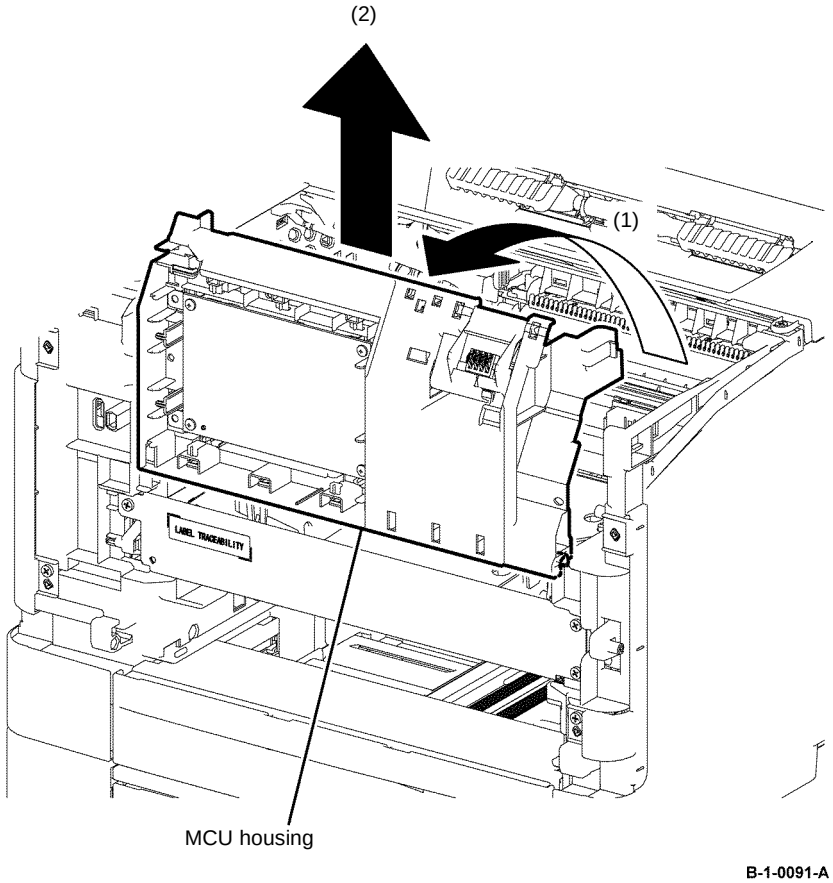

Figure 3 MCU housing removal

6. Remove four screws (silver, flanged, M3, 10mm) that fix the ROS assembly, disengage PJ502, then remove the ROS assembly from the printer, Figure 4.

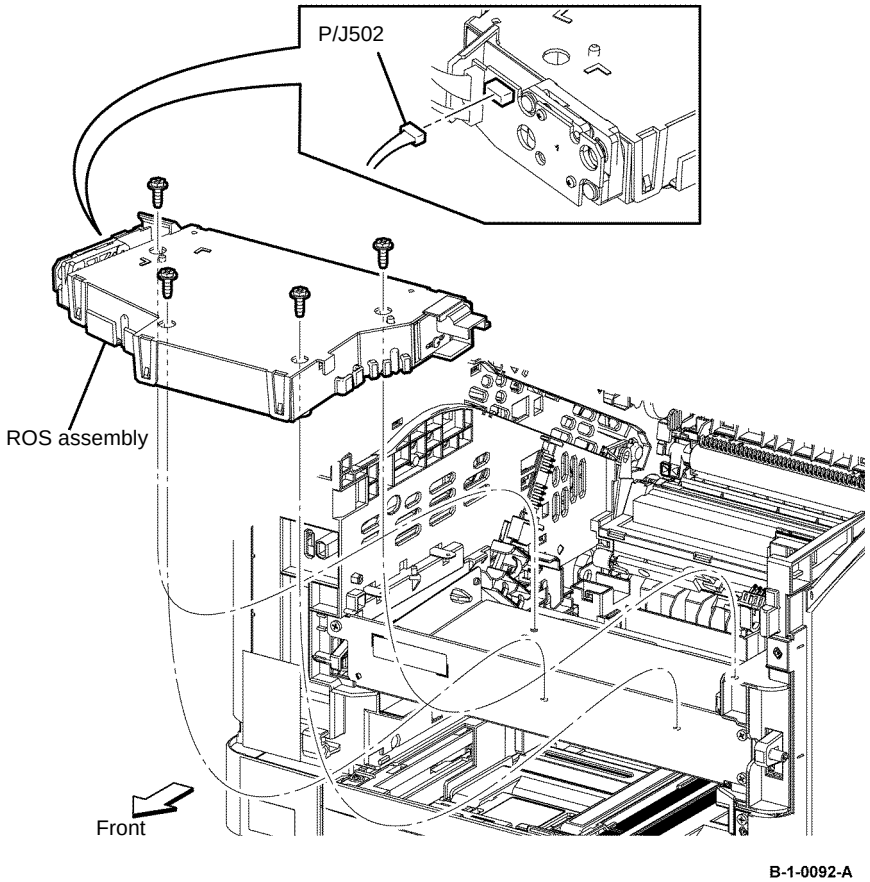

Figure 4 ROS assembly removal

Replacement

The replacement is the reverse of the removal procedure.

REP 3.1 Main Drive Assembly B405

Parts List on PL 3.1

Removal

WARNING

Switch off the electricity to the machine, GP 10. Disconnect the power cord from the customer supply while performing tasks that do not need electricity. Electricity can cause death or injury. Moving parts can cause injury.

WARNING

Take care during this procedure. Sharp edges may be present that can cause injury.

1. Open the MSI cover, PL 13.2 Item 99.
2. Pull out the MSI tray assembly, PL 13.2 Item 9.
3. Remove the front cover assembly, REP 19.1.
4. Remove the rear cover assembly, REP 19.13.
5. Remove the ESS window cover assembly, REP 19.3.
6. Remove the WIFI cap cover, REP 19.19.
7. Remove the left cover, REP 19.11.
8. Remove the ESS PWB, REP 18.1.
9. Remove the fuser, REP 7.1.
10. Remove six screws (silver, M3, 6mm) and one screw (silver, tapping, M4, 10mm), that fix the ESS housing, then remove the ESS housing from the printer, Figure 1.

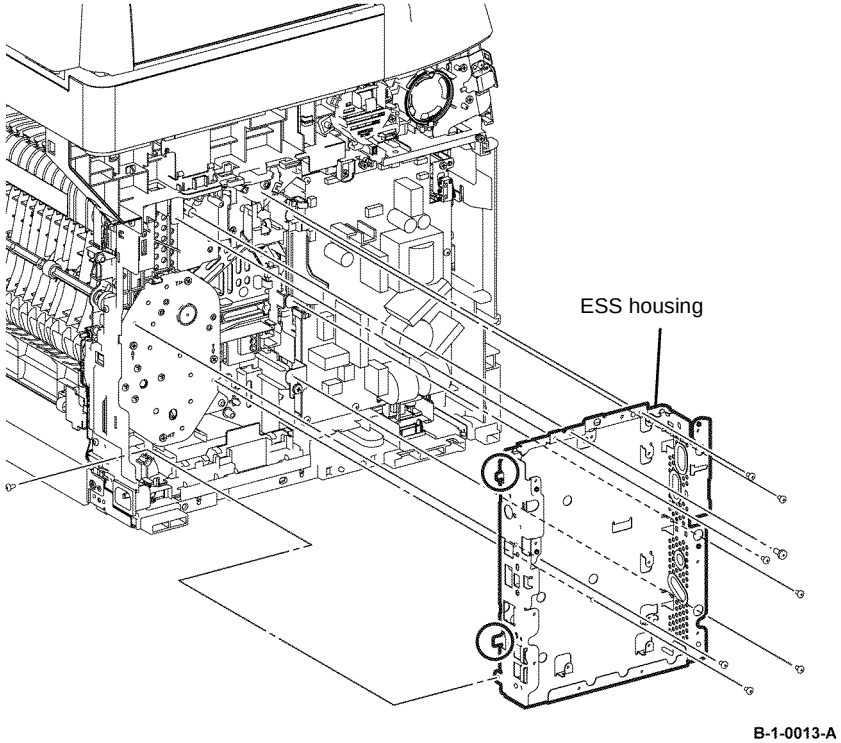

Figure 1 ESS housing removal

11. Push the left front link fully into the printer to disengage the main motor harness assembly, PL 18.3B Item 11 from the clamp.

12. Remove the four screws (silver, tapping, 8mm) that fix the main drive assembly, then remove the LM main drive assembly from the printer, Figure 2.
13. Disengage P/J101 from the LM main drive assembly, Figure 2.

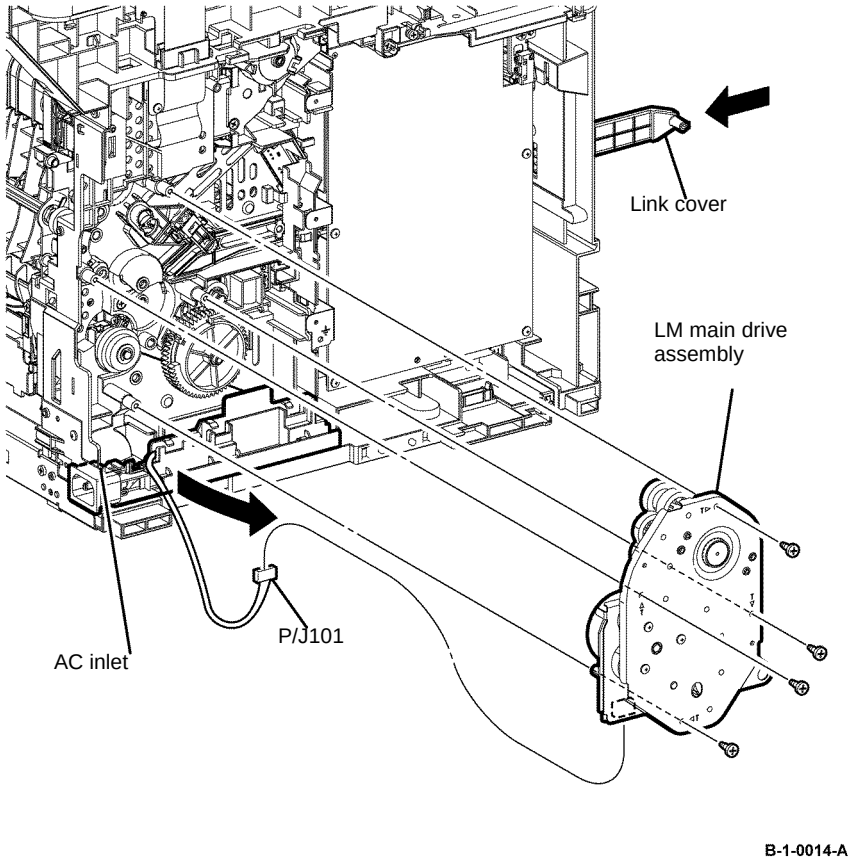

Figure 2 Main drive assembly removal

NOTE: *Keep the link cover with the printer.*

Replacement

The replacement is the reverse of the removal procedure.

REP 3.2 Main Drive Assembly B400

Parts List on PL 3.1

Removal

WARNING

Switch off the electricity to the machine, GP 10. Disconnect the power cord from the customer supply while performing tasks that do not need electricity. Electricity can cause death or injury. Moving parts can cause injury.

WARNING

Take care during this procedure. Sharp edges may be present that can cause injury.

1. Open the MSI cover, PL 13.2 Item 99.
2. Pull out the MSI tray assembly, PL 13.2 Item 9.
3. Remove the front cover assembly, REP 19.2.
4. Remove the rear cover assembly, REP 19.14.
5. Remove the UI console assembly, REP 1.3.
6. Remove the exit top cover assembly, REP 19.10.
7. Remove the WIFI cap cover, REP 19.20.
8. Remove the ESS window cover assembly, REP 19.4.
9. Remove the front/left UI cover assembly, REP 1.4.
10. Remove the left cover, REP 19.12.
11. Remove the ESS PWB, REP 18.2.
12. Remove the fuser, REP 7.2.

13. Remove six screws (silver, M3, 6mm) and one screw (silver, tapping, M4, 10mm), that fix the ESS housing. Release the two tabs from the frame, then remove the ESS housing from the printer, Figure 1.

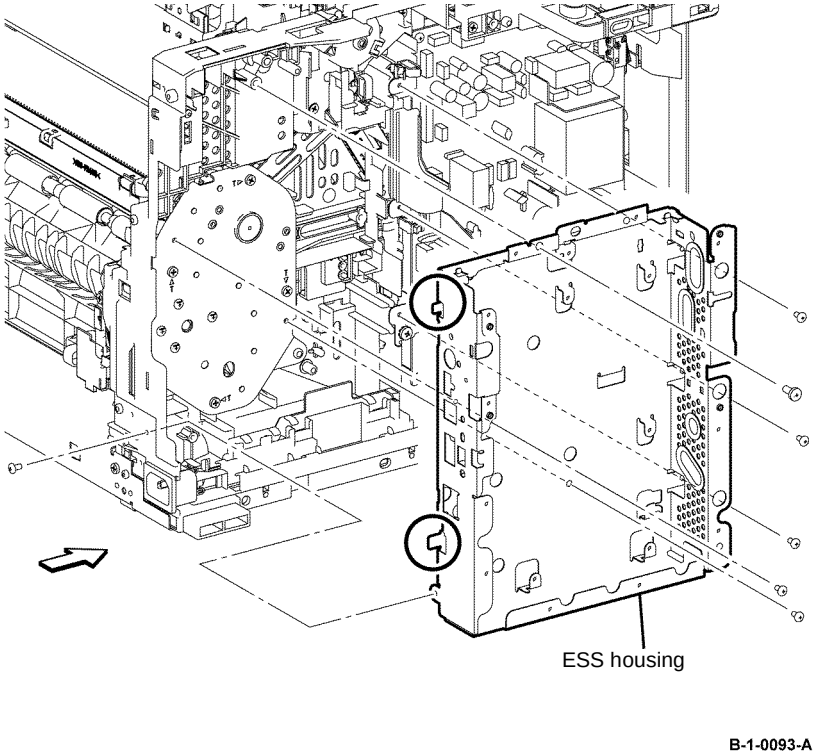

Figure 1 ESS housing removal

14. Disengage the main motor harness assembly, PL 18.3A Item 11, from the clamp.

15. Remove four screws (silver, tapping, 8mm) that fix the main drive assembly, then remove the LM main drive assembly from the printer, Figure 2.
16. Disengage P/J101 from the LM main drive assembly, Figure 2.

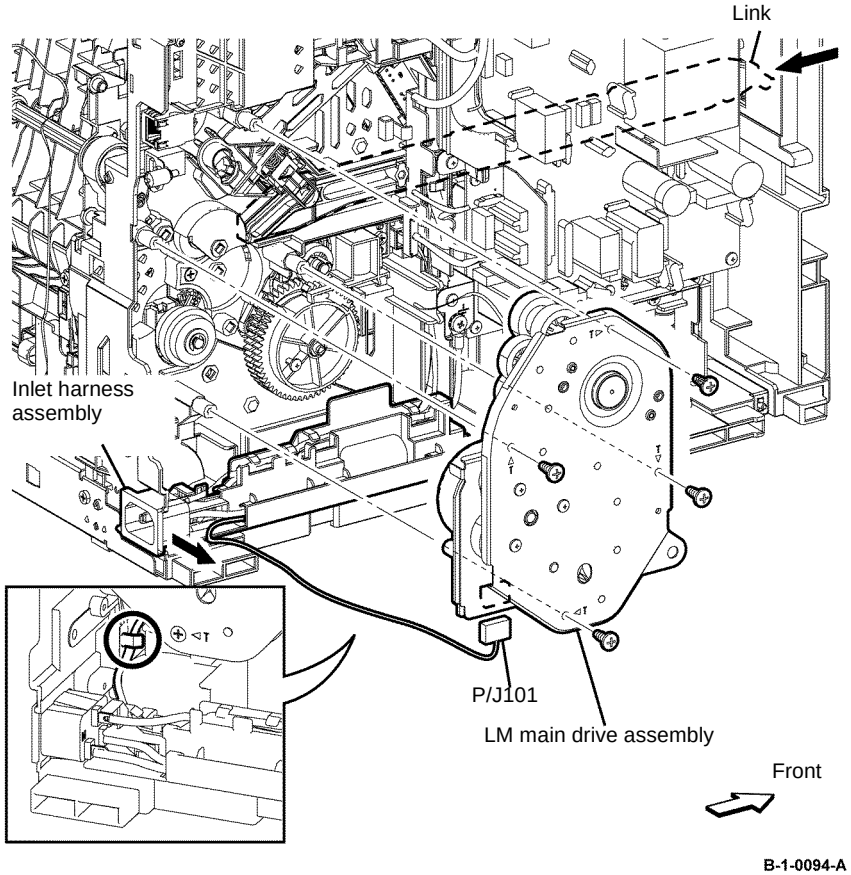

Figure 2 Main drive assembly removal

NOTE: *Keep the link cover with the printer.*

Replacement

The replacement is the reverse of the removal procedure.

REP 3.3 T24 Inverter Clutch Assembly, Exit Out Drive Holder Assembly B405

Parts List on PL 3.1

Removal

WARNING

Switch off the electricity to the machine, GP 14. Disconnect the power cord from the customer supply while performing tasks that do not need electricity. Electricity can cause death or injury. Moving parts can cause injury.

WARNING

Take care during this procedure. Sharp edges may be present that can cause injury.

1. Open the MSI cover, PL 13.2 Item 99.
2. Pull out the MSI tray assembly, PL 13.2 Item 9.
3. Remove the front cover assembly, REP 19.1.
4. Remove the Drum Cartridge. REP 8.1.
5. Remove the rear cover assembly, REP 19.13.
6. Remove the ESS window cover assembly, REP 19.3.
7. Remove the WIFI cap cover, REP 19.19.
8. Remove the left cover, REP 19.11.
9. Remove the ESS PWB, REP 18.1.
10. Remove the fuser, REP 7.1.
11. Remove six screws (silver, M3, 6mm) and one screw (silver, tapping, M4, 10mm), that fix the ESS housing. Release the two tabs from the frame, then remove the ESS housing from the printer, Figure 1.

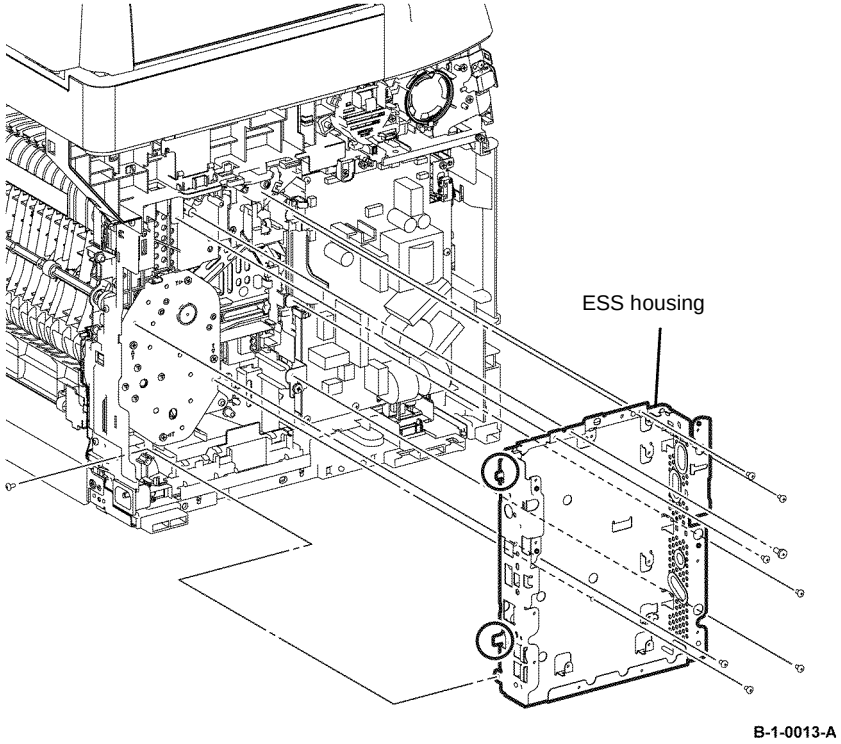

Figure 1 ESS housing removal

12. Release the hook that fixes the FSR harness assembly from above, then move the FSR harness assembly in the arrowed direction, Figure 2.
13. Disengage P/J233 from the FSR harness assembly, Figure 2.

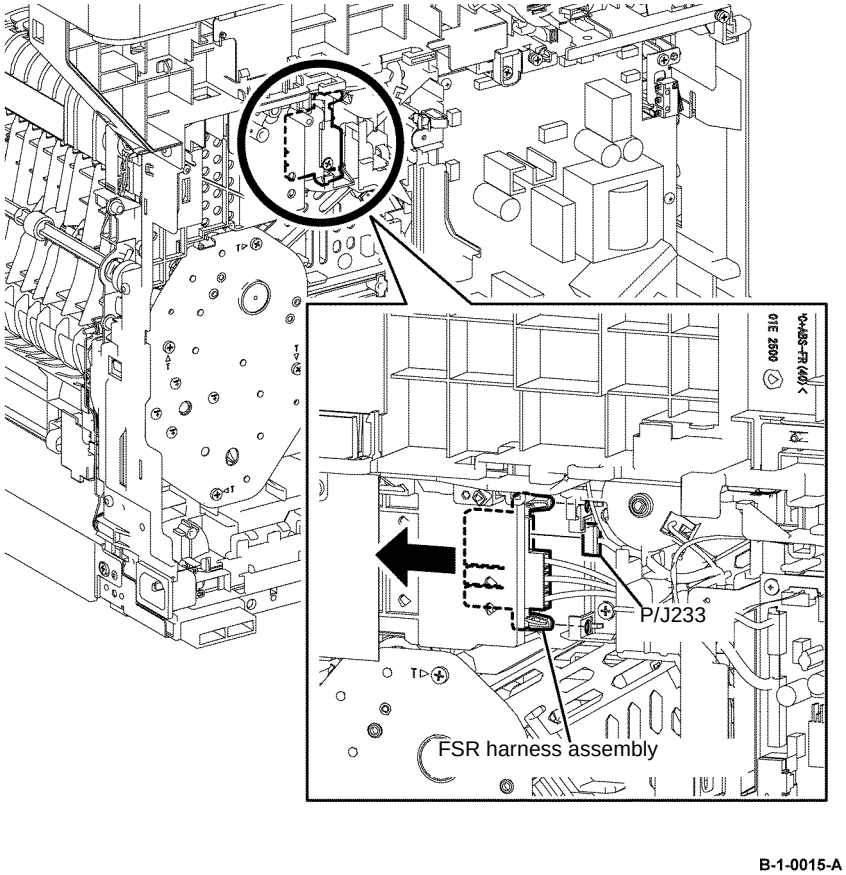

Figure 2 FSR harness assembly removal

14. Release the four hooks that fix the MSI top frame, then remove the MSI top frame, Figure 3.
15. Remove the MCU cover by releasing the hook. Disengage P/J17 from the MCU PWB, then release the harness of the T21 exit clutch assembly from the harness guide, Figure 3.

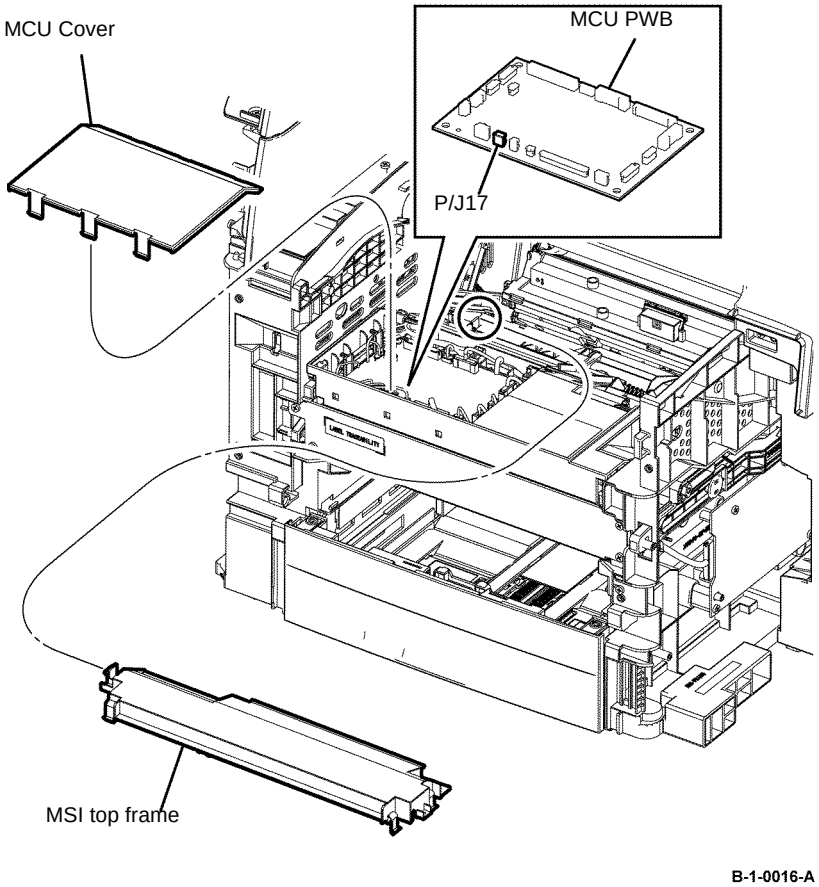

Figure 3 T21 exit clutch harness assembly release

16. Remove one screw (silver, M3, 6mm) that fixes the left upper corner of the LVPS PWB, then lift the earth plate.

17. Remove two screws (silver, tapping, 8mm) that fix the exit out drive holder assembly. Release the harness from the harness guide installed on the exit out drive holder assembly, then remove the exit out drive holder assembly by releasing the hook, Figure 4.

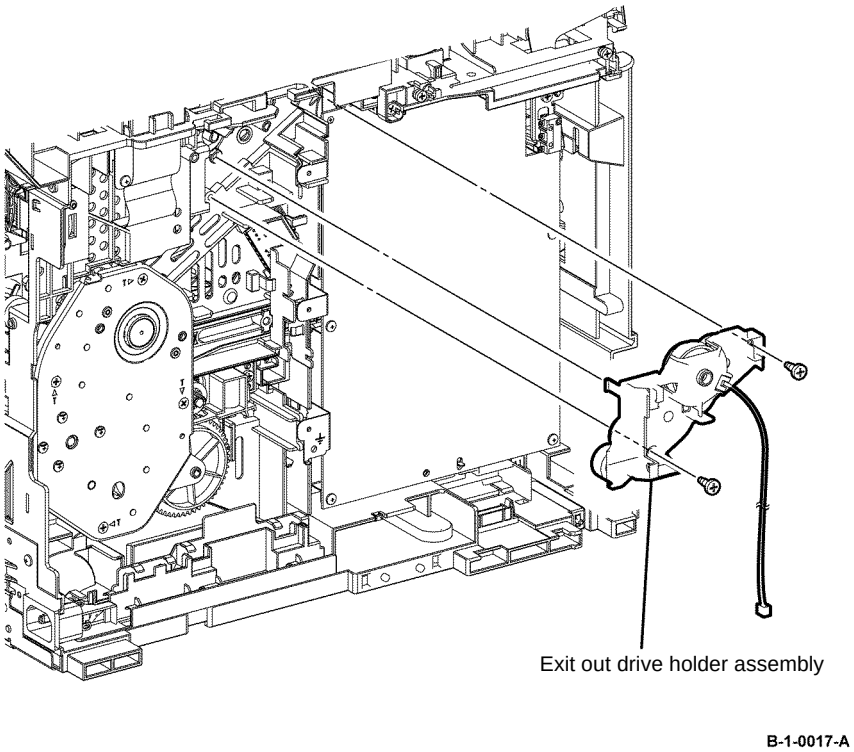

Figure 4 Exit out drive holder assembly removal

18. Release the hook that fixes the E3 gear, from the exit out drive holder assembly. Remove the E3 gear and E3 Z gear. Remove the T24 inverter clutch assembly, Figure 5.

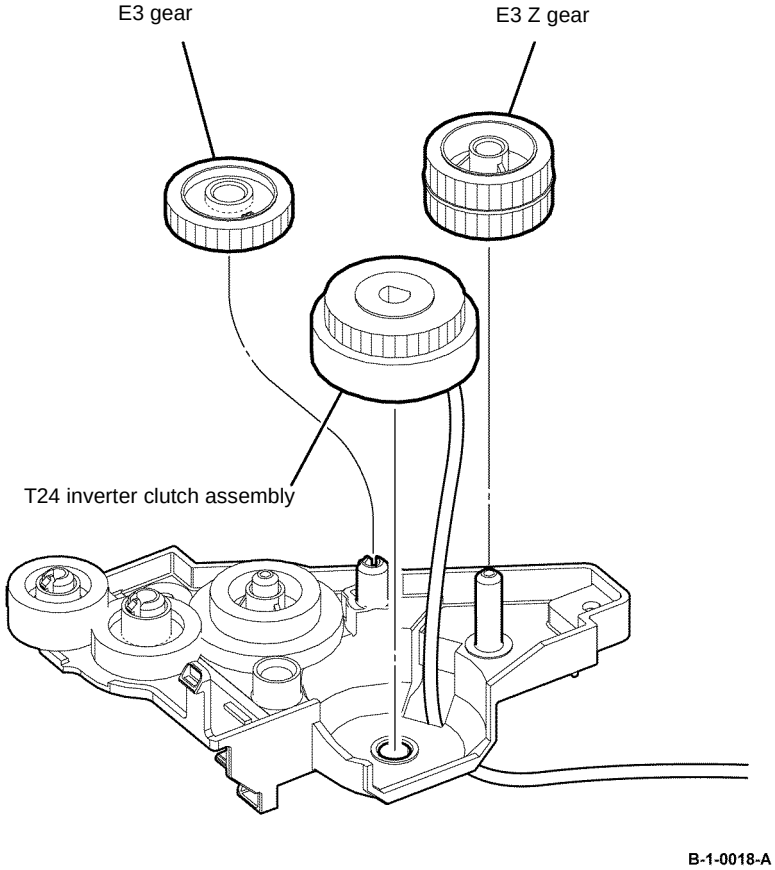

Figure 5 T24 inverter clutch assembly removal

Replacement

1. The replacement is the reverse of the removal procedure.
2. During replacement, insert the earth plate between the LVPS PWB and the frame.

3. When installing the exit out drive holder assembly, fit the D-shaped shaft of the exit in drive S3 holder into the D-shaped hole of the T24 inverter clutch assembly, Figure 6.

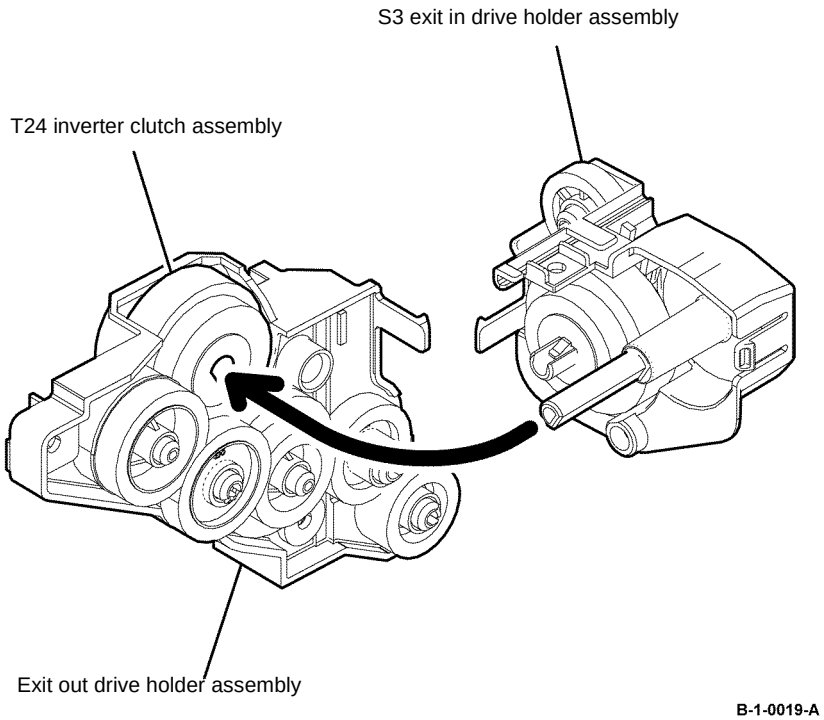

Figure 6 Exit out drive holder assembly installation

4. When installing the MSI top frame, position the printer to be resting on its right side. Ensure that the MSI no paper actuator, coupled with the MSI top frame fits into the hole on the printer and the MSI in lock touches the pickup holder assembly, Figure 7.

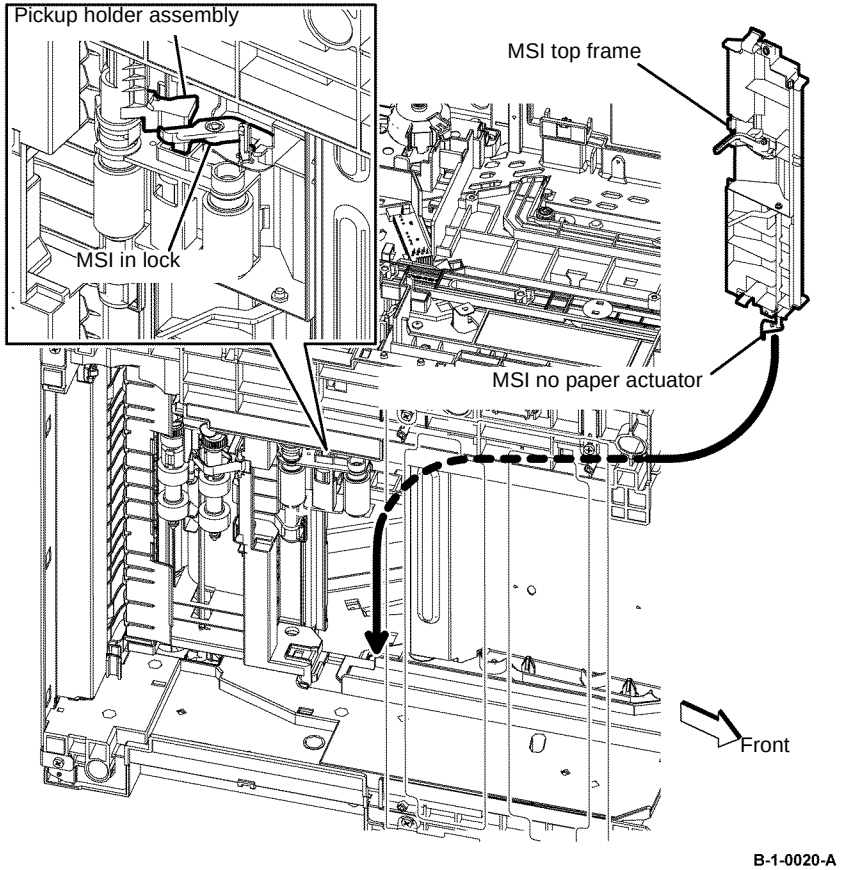

Figure 7 MSI top frame installation

REP 3.4 T24 Inverter Clutch Assembly, Exit Out Drive Holder Assembly B400

Parts List on PL 3.1

Removal

WARNING

Switch off the electricity to the machine, GP 14. Disconnect the power cord from the customer supply while performing tasks that do not need electricity. Electricity can cause death or injury. Moving parts can cause injury.

WARNING

Take care during this procedure. Sharp edges may be present that can cause injury.

1. Open the MSI cover, PL 13.2 Item 99.
2. Pull out the MSI tray assembly, PL 13.2 Item 9.
3. Remove the front cover assembly, REP 19.2.
4. Remove the Drum Cartridge. REP 8.2.
5. Remove the rear cover assembly, REP 19.14.
6. Remove the UI console assembly, REP 1.3.
7. Remove the exit top cover assembly, REP 19.10.
8. Remove the WIFI cap cover, REP 19.20.
9. Remove the ESS window cover assembly, REP 19.4.
10. Remove the front/left UI cover assembly, REP 1.4.
11. Remove the left cover, REP 19.12.
12. Remove the ESS PWB, REP 18.2.
13. Remove the fuser, REP 7.2.
14. Remove six screws (silver, M3, 6mm) and one screw (silver, tapping, M4, 10mm), that fix the ESS housing. Release the two tabs from the frame, then remove the ESS housing from the printer, Figure 1.

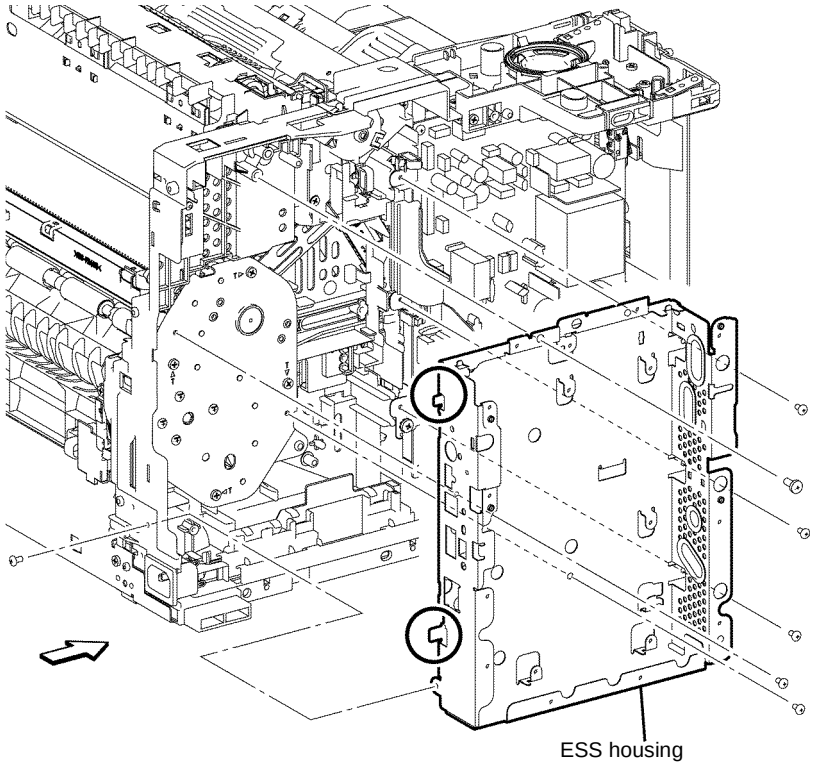

Figure 1 ESS housing removal

15. Release the hook that fixes the FSR harness assembly from above. Disengage P/J233 from the FSR harness assembly, Figure 2.
16. Release the two hooks that fix the harness guide to the printer. Remove the harness guide, Figure 2.

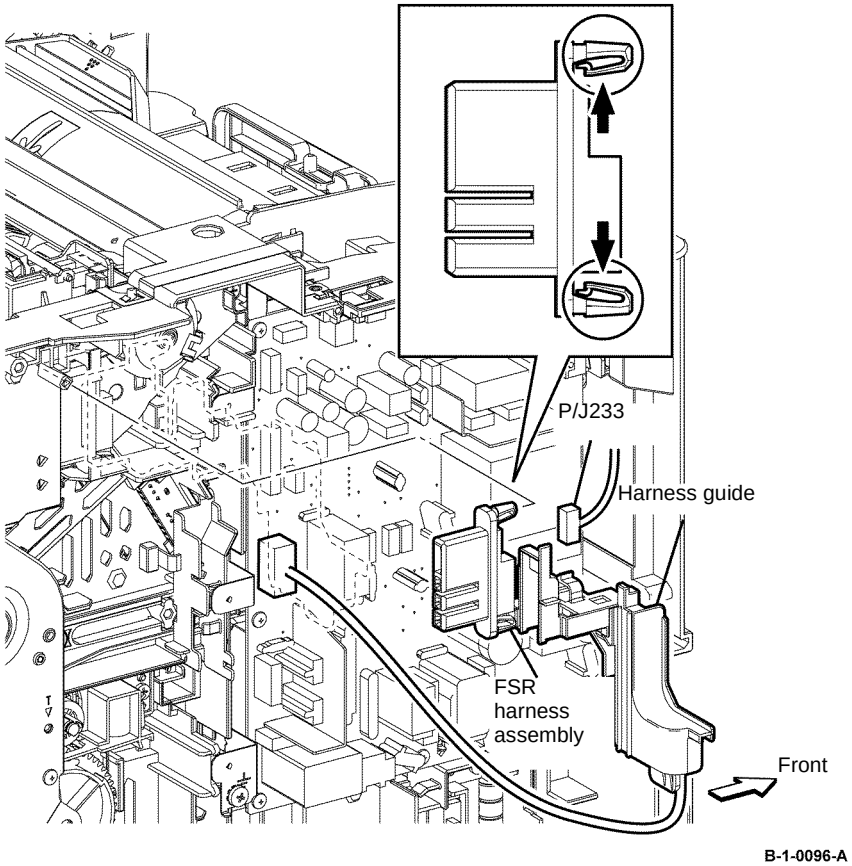

Figure 2 FSR harness assembly removal

17. Release the four hooks that fix the MSI top frame. Remove the MSI top frame, Figure 3.
18. Release the three hooks that fix the MCU cover to the printer. Disengage PJ17 from the MCU PWB, then release the harness of the T21 exit clutch assembly from the harness guide, Figure 3.

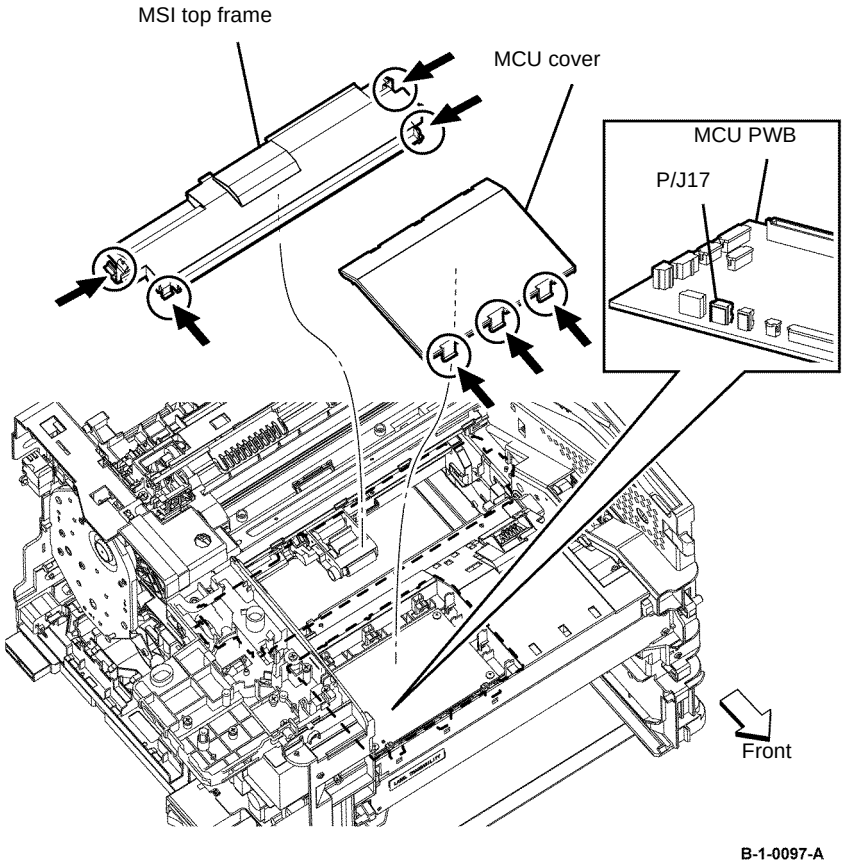

Figure 3 T21 exit clutch harness assembly release

19. Remove one screw (silver, M3, 6mm) that fixes the left upper corner of the LVPS PWB, then lift the earth plate Figure 4.
20. Remove two screws (silver, tapping, 6mm) that fix the exit out drive holder assembly to the printer. Release one hook, then release the harness of the T21 exit clutch assembly. Remove the exit out drive holder assembly, Figure 4.

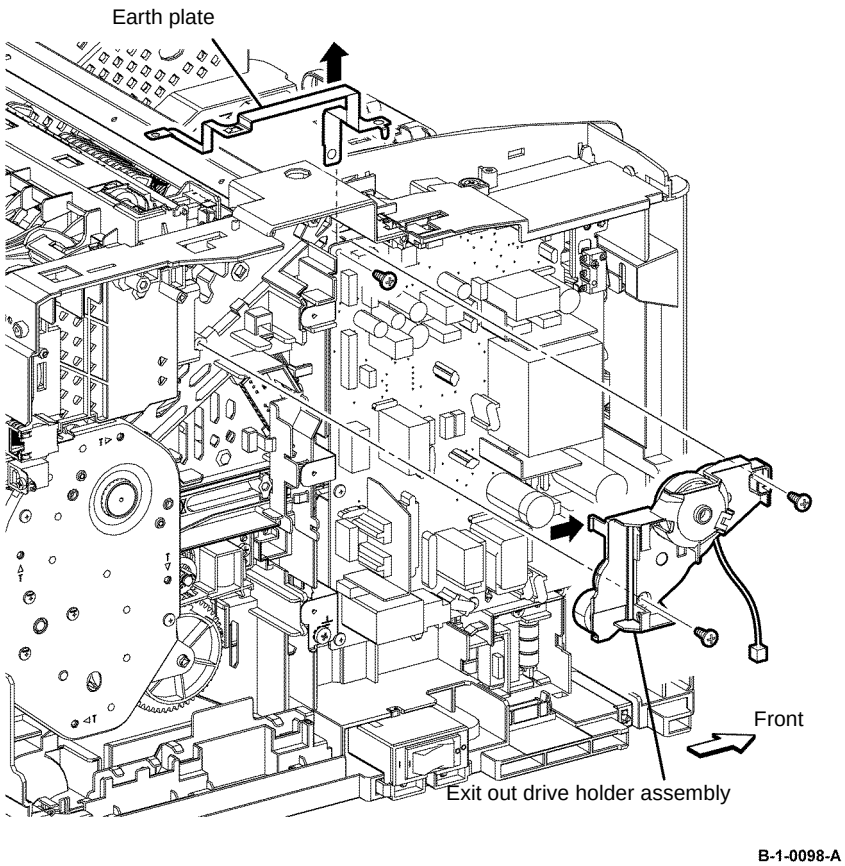

Figure 4 Exit out drive holder assembly removal

21. Release the hook that fixes the E3 gear to the exit out drive holder assembly. Remove the E3 gear and E3 Z gear. Remove the T24 inverter clutch assembly, Figure 5.
22. Remove the T24 inverter clutch assembly, Figure 5.

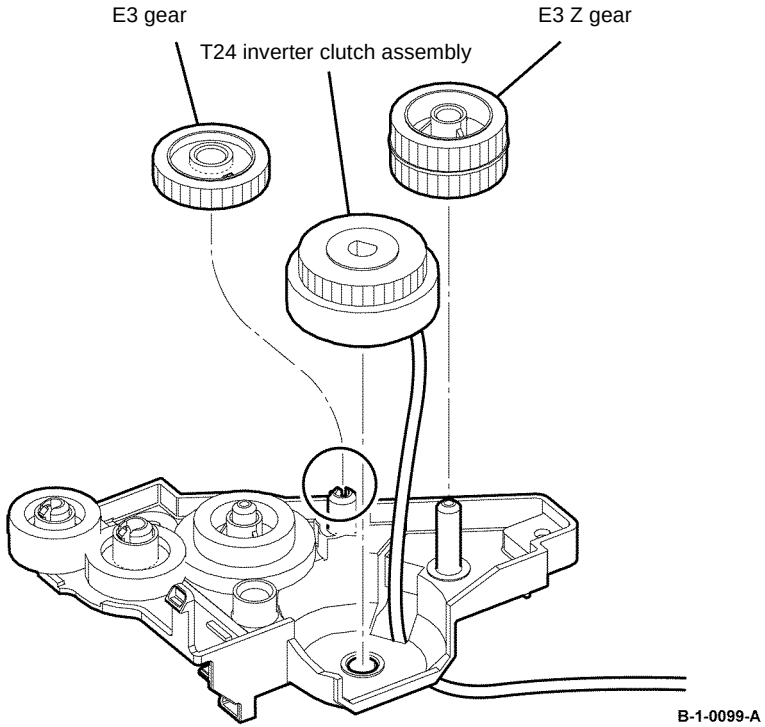

Figure 5 T24 inverter clutch assembly removal

Replacement

1. The replacement is the reverse of the removal procedure.
2. During replacement, insert the earth plate between the LVPS PWB and the frame.

3. When installing the exit out drive holder assembly, fit the D-shaped shaft of the exit in drive S3 holder into the D-shaped hole of the T24 inverter clutch assembly, Figure 6.

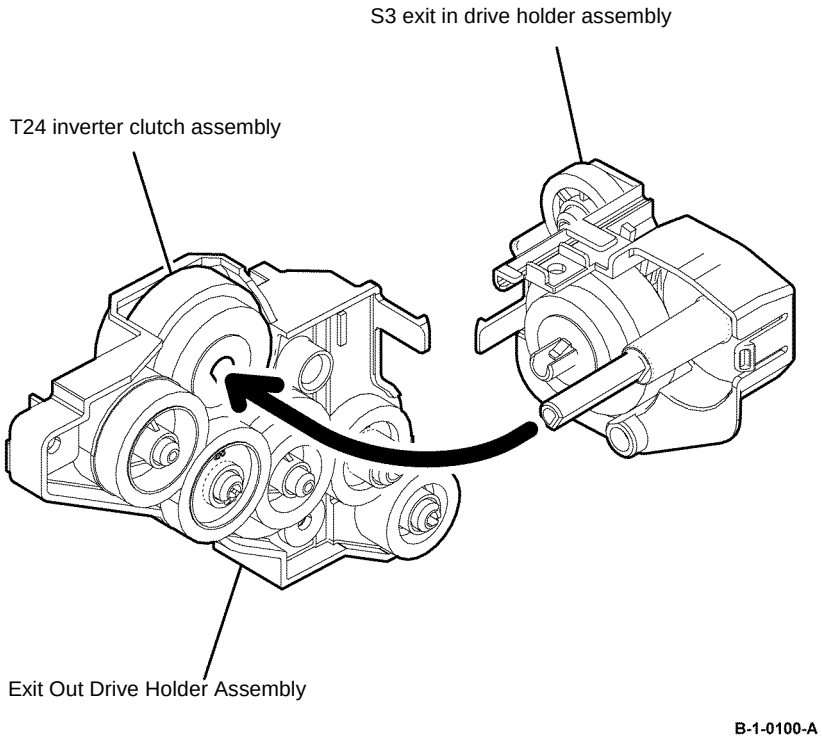

Figure 6 Exit out drive holder assembly installation

4. When installing the MSI top frame, position the printer to be resting on its right side. Ensure that the MSI no paper actuator, coupled with the MSI top frame fits into the hole on the printer and the MSI in lock touches the pickup holder assembly, Figure 7.

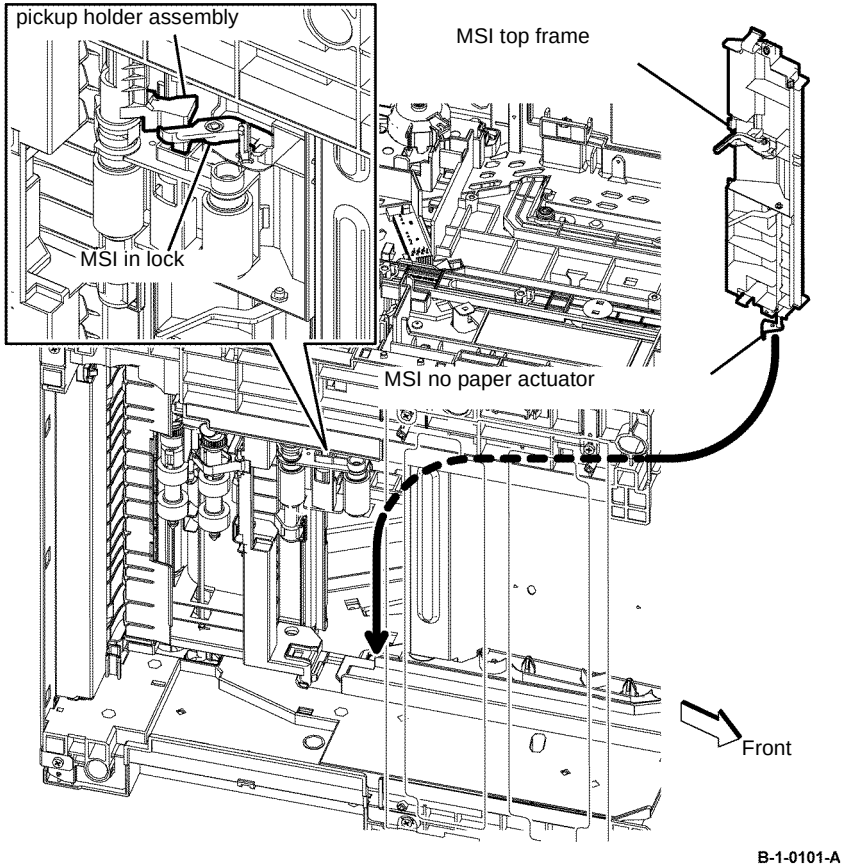

Figure 7 MSI top frame installation

REP 3.5 T21 Exit Clutch Assembly, Exit In Drive Holder Assembly B405

Parts List on PL 3.1

Removal

WARNING

Switch off the electricity to the machine, GP 10. Disconnect the power cord from the customer supply while performing tasks that do not need electricity. Electricity can cause death or injury. Moving parts can cause injury.

WARNING

Take care during this procedure. Sharp edges may be present that can cause injury.

1. Open the MSI cover, PL 13.2 Item 99.
2. Pull out the MSI tray assembly, PL 13.2 Item 9.
3. Remove the front cover assembly, REP 19.1.
4. Remove the Drum Cartridge. REP 8.1.
5. Remove the rear cover assembly, REP 19.13.
6. Remove the ESS window cover assembly, REP 19.3.
7. Remove the WIFI cap cover, REP 19.19.
8. Remove the left cover, REP 19.11.
9. Remove the right cover assembly, REP 19.7.
10. Remove the exit top cover assembly. REP 19.9.
11. Remove the ESS PWB, REP 18.1.
12. Remove six screws (silver, M3, 6mm) and one screw (silver, tapping, M4, 10mm) that fix the ESS housing. Release the two tabs from the frame, then remove the ESS housing from the printer, Figure 1.

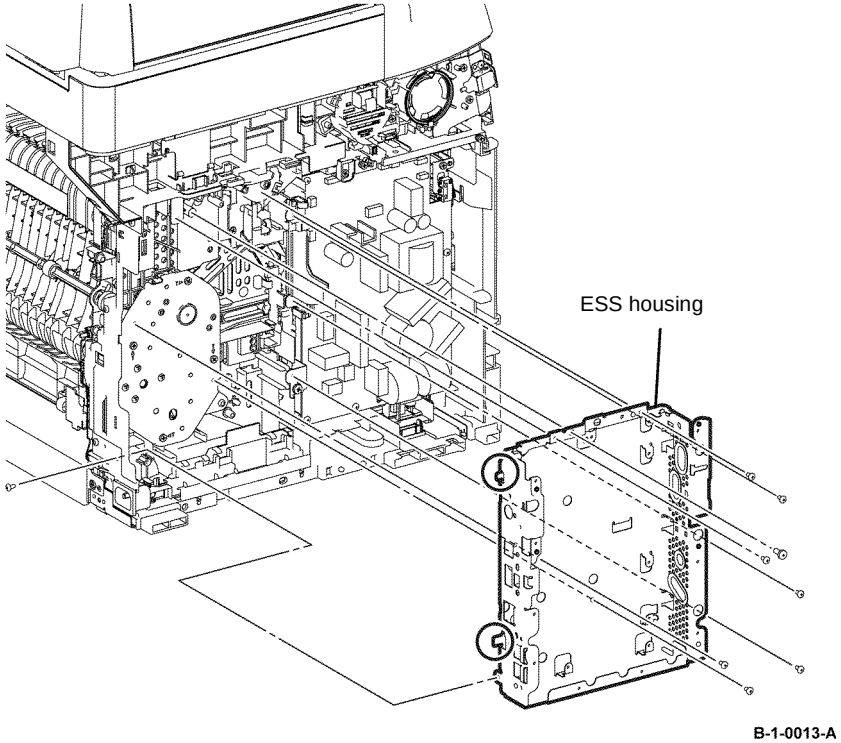

Figure 1 ESS housing removal

13. Release the four hooks that fix the MSI top frame, then remove the MSI top frame, Figure 2.

14. Remove the MCU cover by releasing the hook. Disengage PJ16 from the MCU PWB, then release the harness of the T24 inverter clutch assembly from the harness guide, Figure 2.

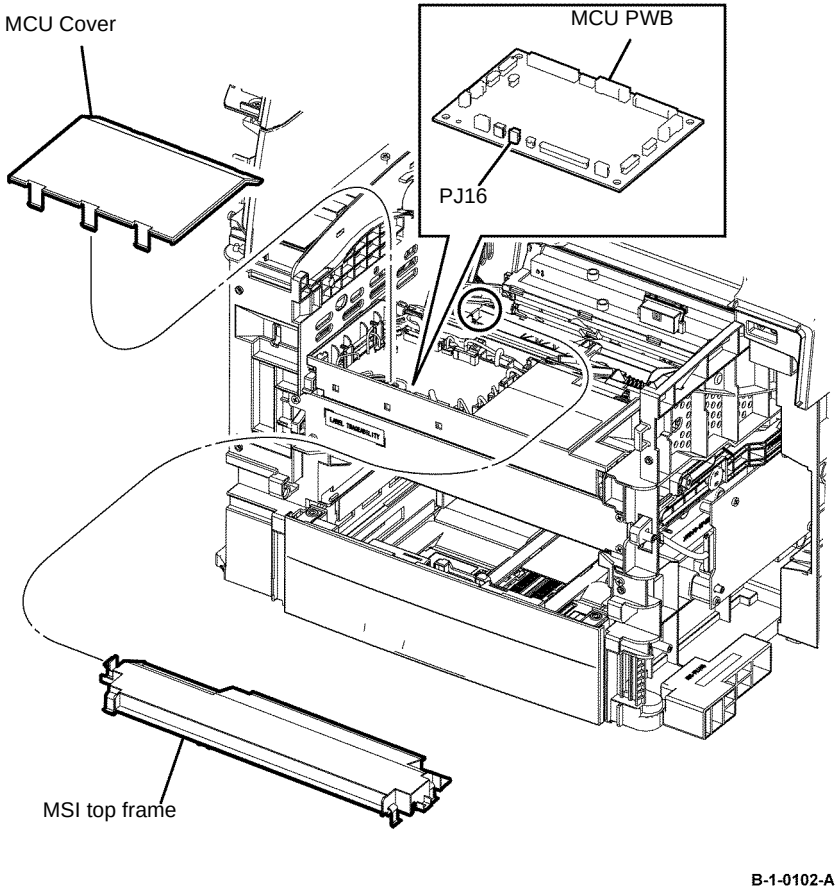

Figure 2 T24 inverter clutch assembly harness release

15. Remove one screw (silver, tapping, 8mm) that fixes the exit in drive holder assembly, then remove the exit in drive holder assembly from the printer, Figure 3.

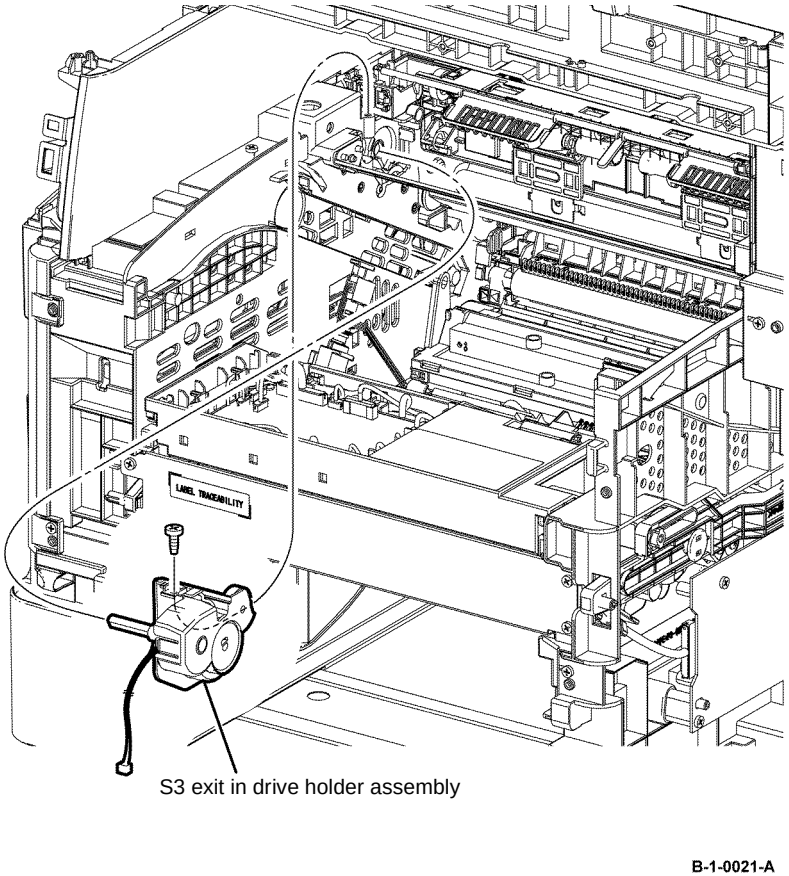

Figure 3 Exit in drive holder assembly removal

16. Release the harness from the harness guide installed on the exit in drive holder assembly.

17. Release the hook on the shaft, and then remove the T21 exit clutch assembly, Figure 4.

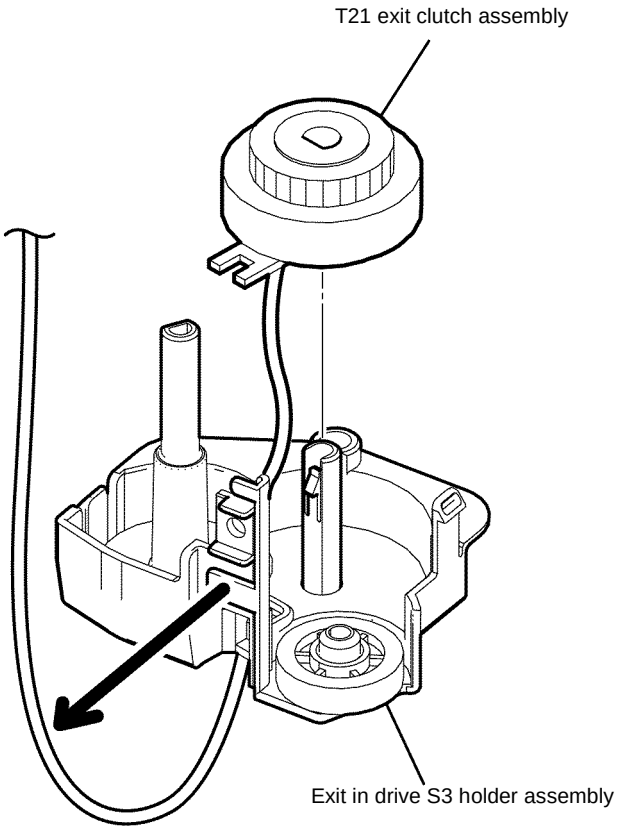

Figure 4 T21 exit clutch assembly removal

Replacement

1. The replacement is the reverse of the removal procedure.

2. When installing the T21 exit clutch assembly, fit the tab into the stopper of the exit in drive holder assembly, Figure 5.

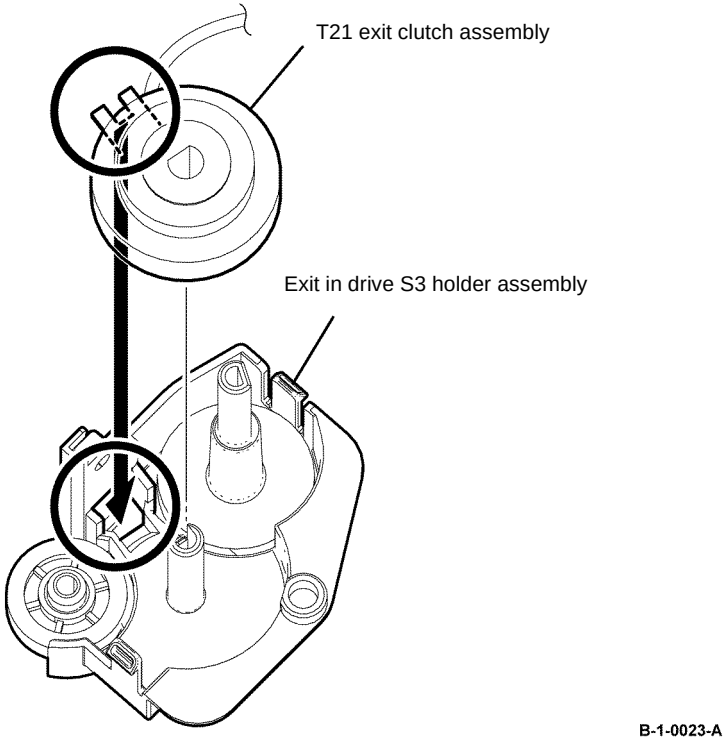

Figure 5 T21 exit clutch assembly installation

3. When installing the exit in drive holder assembly, fit the D-shaped shaft of the exit in drive holder assembly into the D-shaped hole of the T24 inverter clutch assembly, Figure 6.

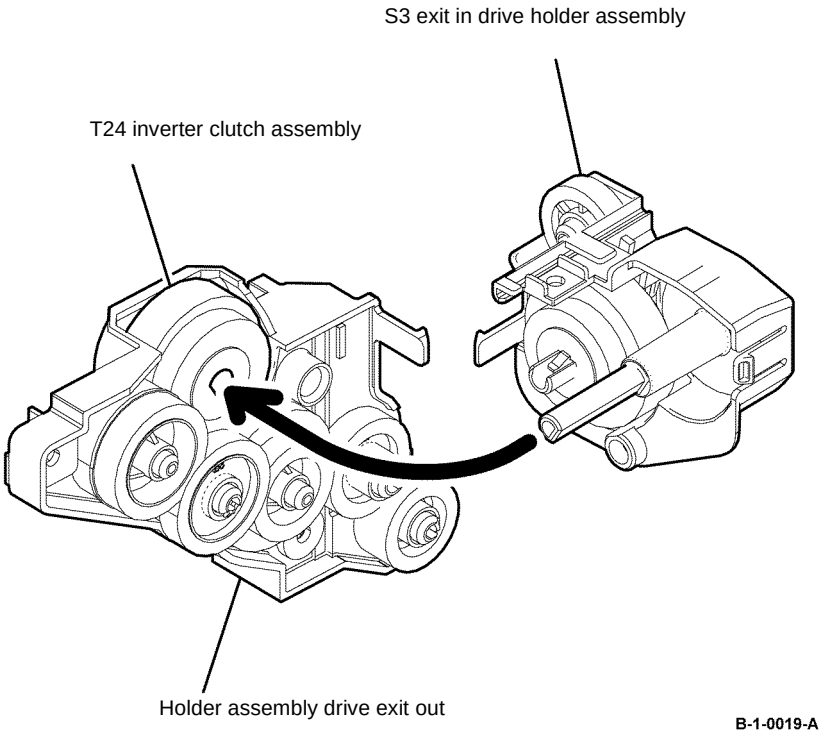

Figure 6 Exit in drive holder assembly installation

4. When installing the MSI top frame, position the printer to be resting on its right side. Ensure that the MSI no paper actuator, coupled with the MSI top frame fits into the hole on the printer and the MSI in lock touches the pickup holder assembly, Figure 7.

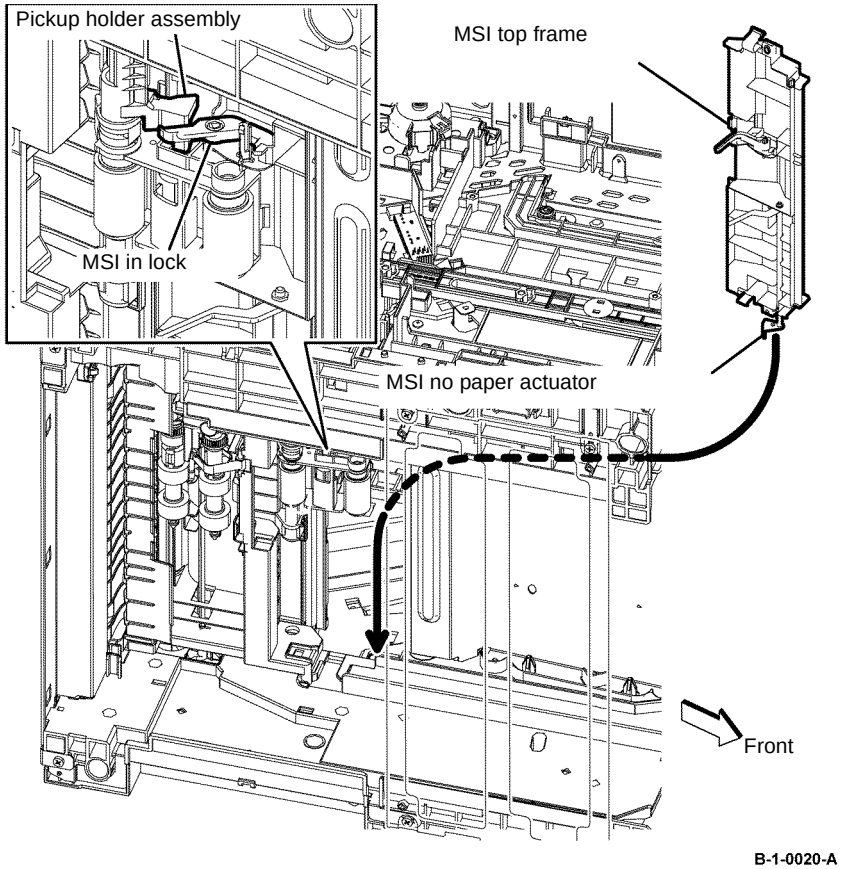

Figure 7 MSI top frame installation

REP 3.6 T21 Exit Clutch Assembly, Exit In Drive Holder Assembly B400

Parts List on PL 3.1

Removal

WARNING

Switch off the electricity to the machine, GP 10. Disconnect the power cord from the customer supply while performing tasks that do not need electricity. Electricity can cause death or injury. Moving parts can cause injury.

WARNING

Take care during this procedure. Sharp edges may be present that can cause injury.

1. Open the MSI cover, PL 13.2 Item 99.
2. Pull out the MSI tray assembly, PL 13.2 Item 9.
3. Remove the front cover assembly, REP 19.2.
4. Remove the rear cover assembly, REP 19.14.
5. Remove the UI console assembly, REP 1.3.
6. Remove the exit top cover assembly, REP 19.10.
7. Remove the WIFI cap cover, REP 19.20.
8. Remove the ESS window cover assembly, REP 19.4.
9. Remove the front/left UI cover assembly, REP 1.4.
10. Remove the left cover, REP 19.12.
11. Remove the ESS PWB, REP 18.2.
12. Remove six screws (silver, M3, 6mm) and one screw (silver, tapping, M4, 10mm) that fix the ESS housing. Release the two tabs from the frame, then remove the ESS housing from the printer, Figure 1.

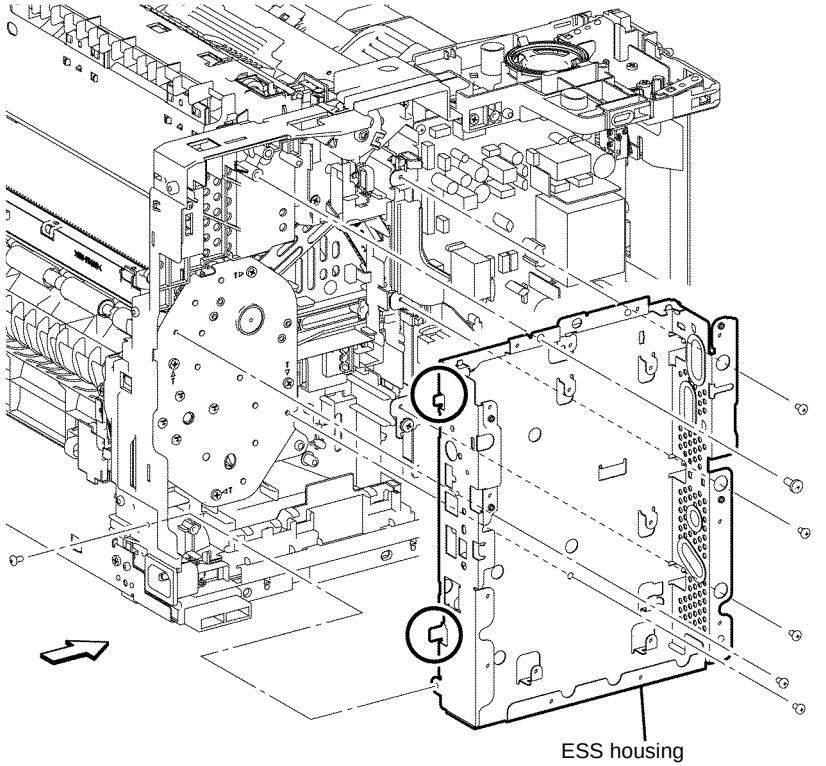

Figure 1 ESS housing removal

13. Release the four hooks that fix the MSI top frame, then remove the MSI top frame, Figure 2.
14. Remove the MCU cover by releasing the three hooks. Disengage P/J16 from the MCU PWB, then release the harness of the T24 inverter clutch assembly from the harness guide, Figure 2.

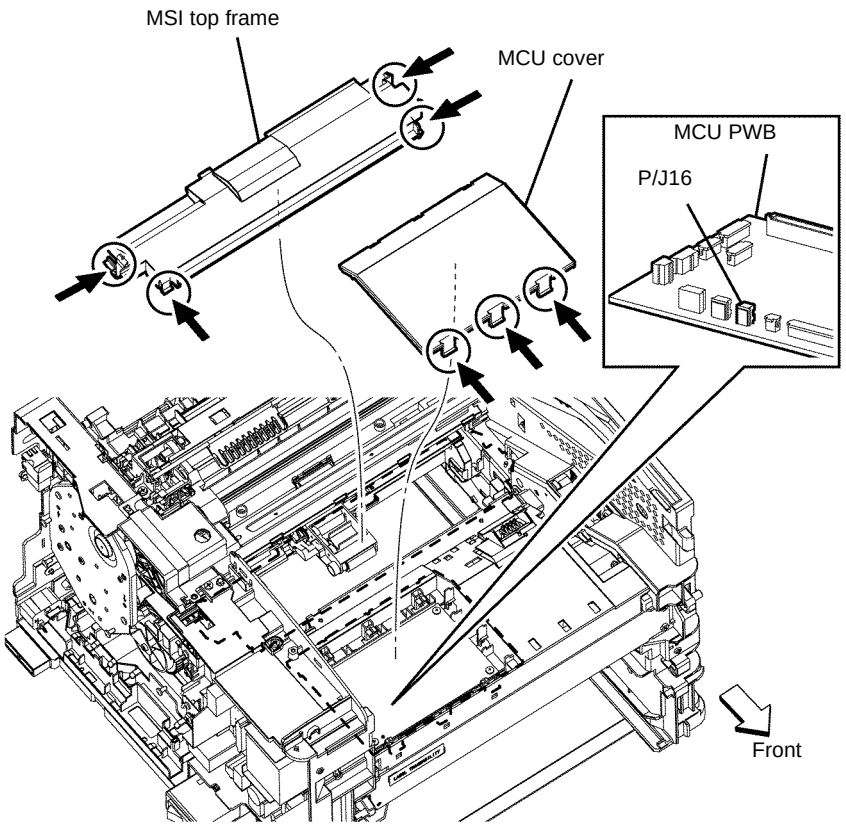

B-1-0104-A

Figure 2 T24 inverter clutch harness assembly release

15. Remove one screw (silver, tapping, 6mm) that fixes the exit in drive holder assembly to the printer. Release the two hooks, release the harness of the T21 exit clutch assembly, then remove the exit in drive holder assembly from the printer, Figure 3.

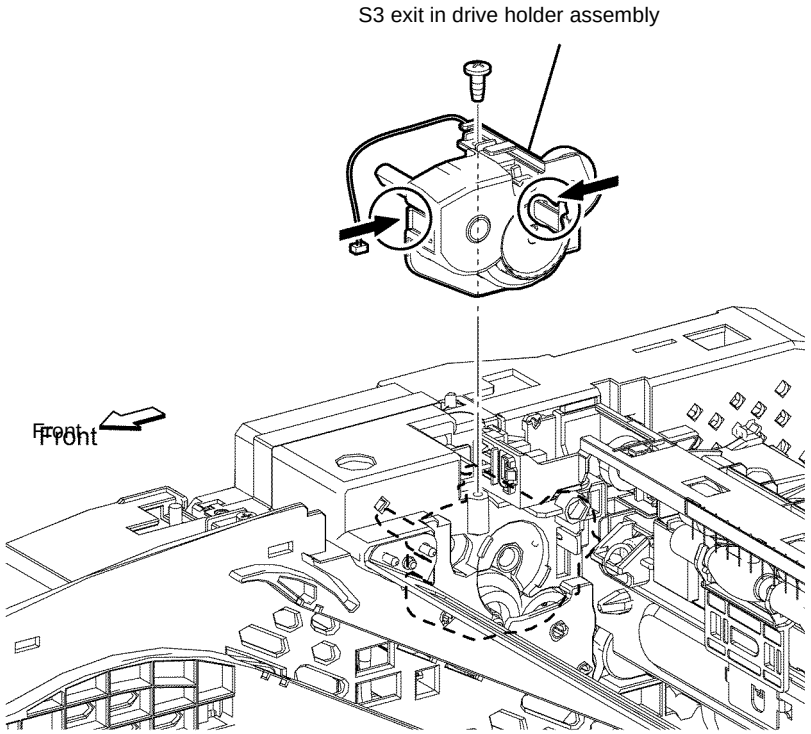

B-1-0105-A

Figure 3 Exit in drive holder assembly removal

16. Release the harness of the T21 exit clutch assembly from the exit in drive holder assembly.

17. Release the hook on the E5 gear, then remove the T21 exit clutch assembly, Figure 4.

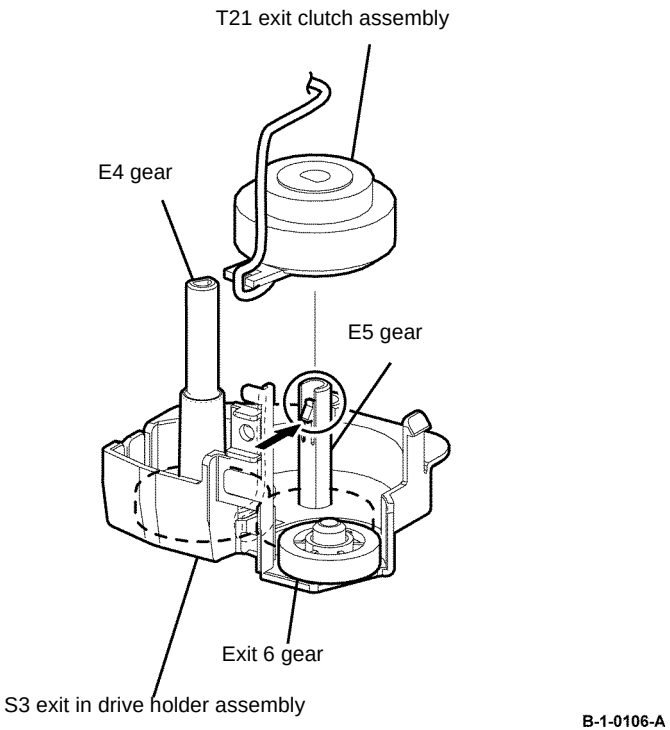

Figure 4 T21 exit clutch assembly removal

Replacement

1. The replacement is the reverse of the removal procedure.

2. When installing the T21 exit clutch assembly, fit the tab into the stopper of the exit in drive holder assembly, Figure 5.

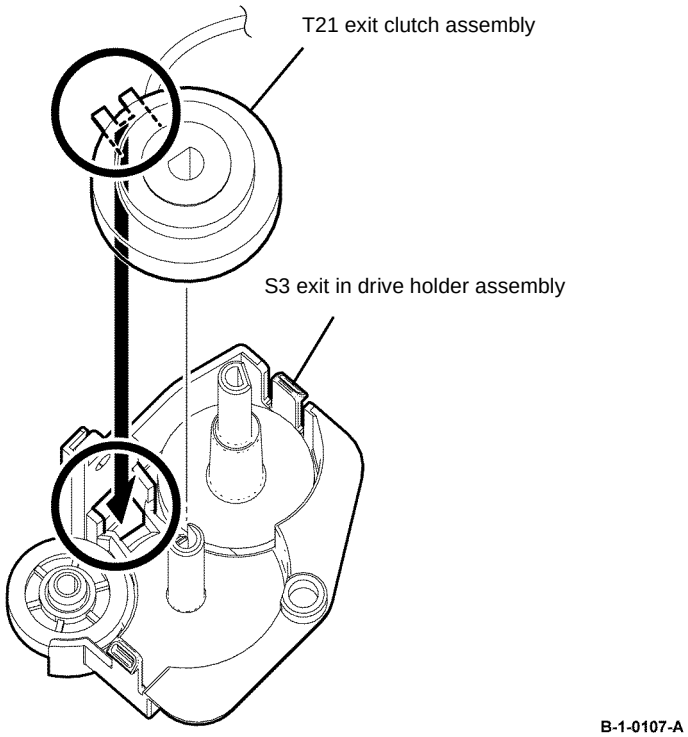

Figure 5 T21 exit clutch assembly installation

3. When installing the exit in drive holder assembly, fit the D-shaped shaft of the exit in drive holder assembly into the D-shaped hole of the T24 inverter clutch assembly, Figure 6.

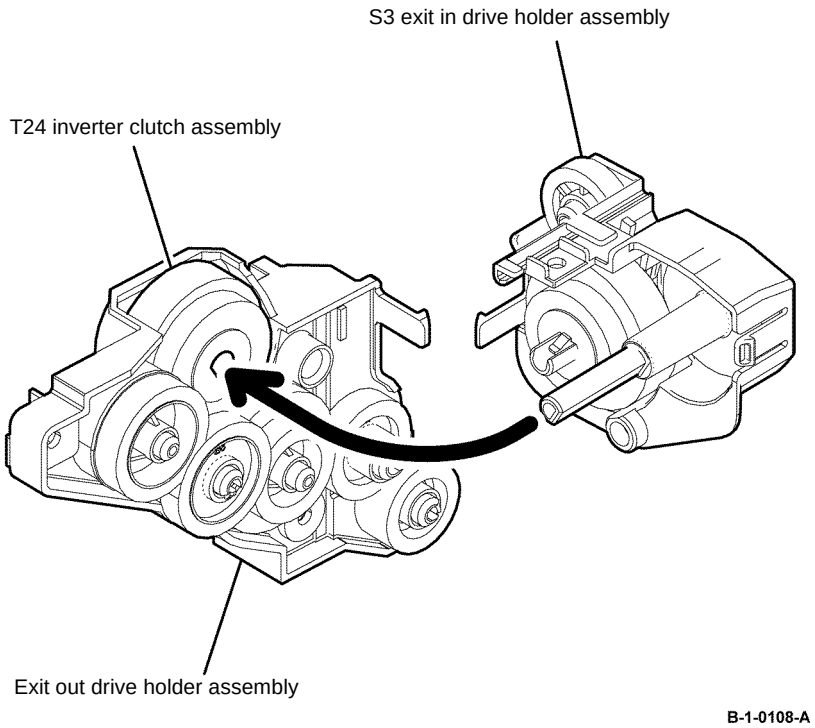

Figure 6 Exit in drive holder assembly installation

4. When installing the MSI top frame, position the printer to be resting on its right side. Ensure that the MSI no paper actuator, coupled with the MSI top frame fits into the hole on the printer and the MSI in lock touches the pickup holder assembly, Figure 7.

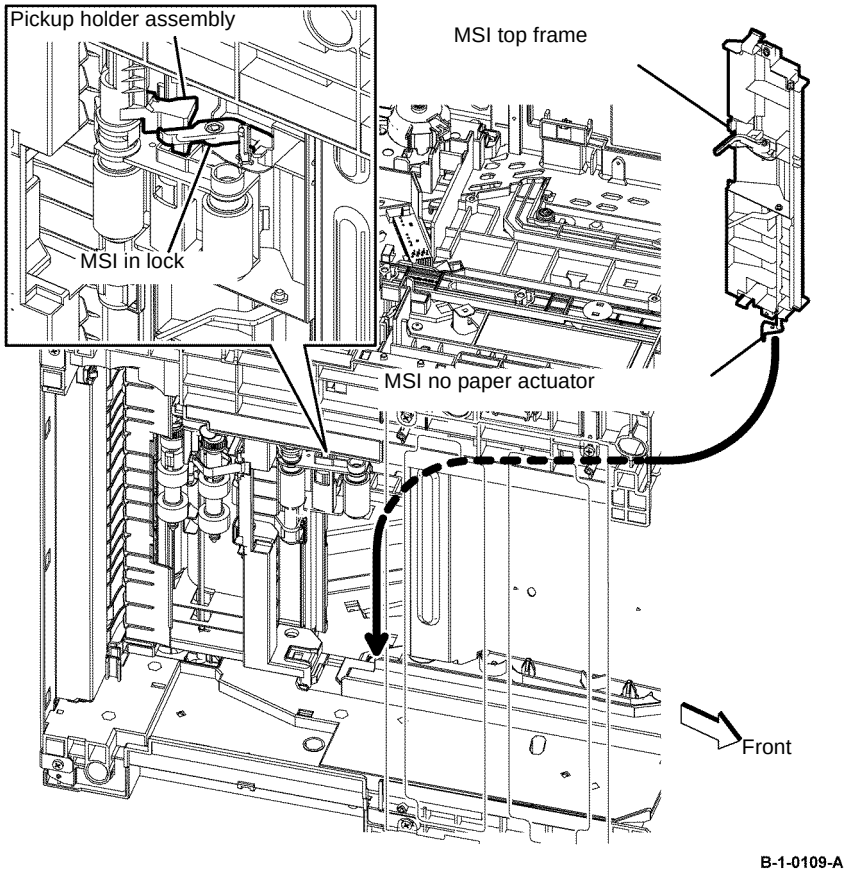

Figure 7 MSI top frame installation

REP 3.7 Duplex in Gear B405

Parts List on PL 3.1

Removal

WARNING

Switch off the electricity to the machine, GP 10. Disconnect the power cord from the customer supply while performing tasks that do not need electricity. Electricity can cause death or injury. Moving parts can cause injury.

WARNING

Take care during this procedure. Sharp edges may be present that can cause injury.

1. Open the rear cover, PL 19.2B Item 99.
2. Rotate the duplex gear holder, clockwise while pulling the tab, Figure 1.

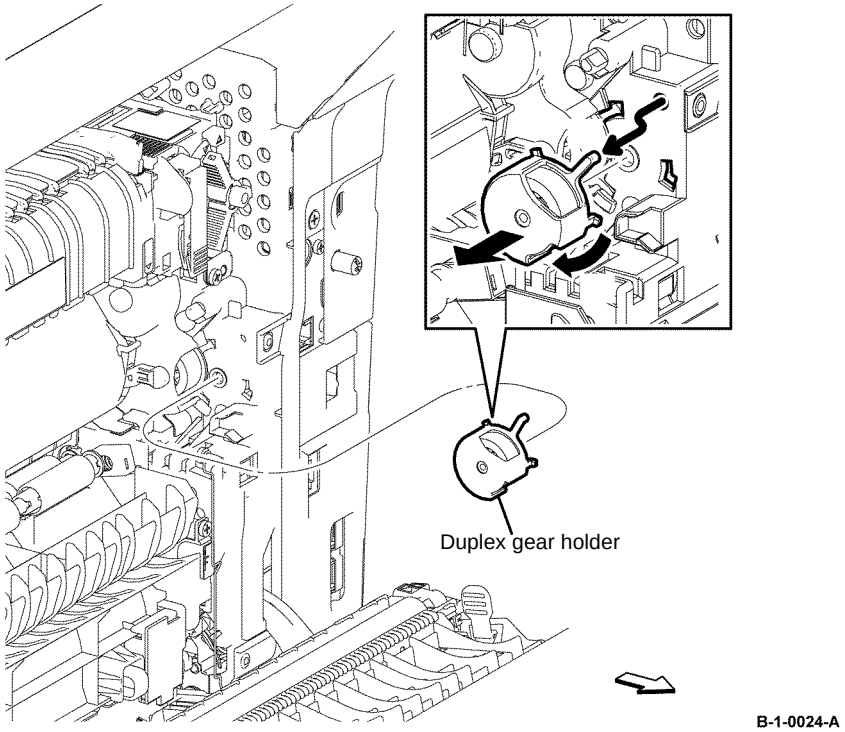

Figure 1 Duplex gear holder removal

3. Remove the duplex in gear from the duplex gear holder, Figure 2.

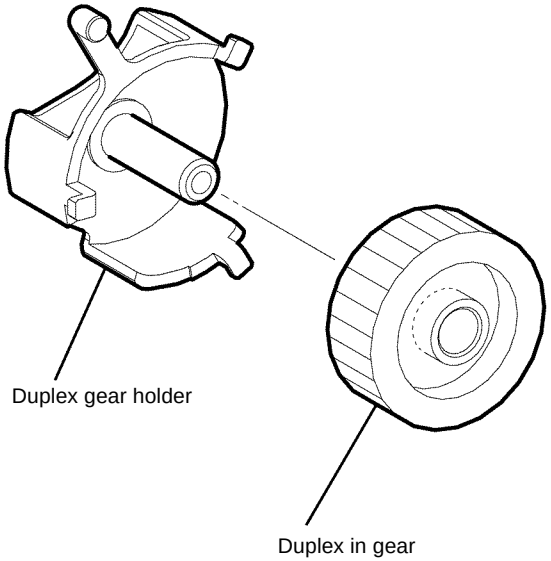

Figure 2 Duplex in gear removal

Replacement

The replacement is the reverse of the removal procedure.

REP 3.8 Duplex in Gear B400

Parts List on PL 3.1

Removal

WARNING

Switch off the electricity to the machine, GP 10. Disconnect the power cord from the customer supply while performing tasks that do not need electricity. Electricity can cause death or injury. Moving parts can cause injury.

WARNING

Take care during this procedure. Sharp edges may be present that can cause injury.

1. Open the rear cover, PL 19.2A Item 99.

2. Rotate the duplex gear holder, clockwise while pulling the tab, Figure 1.

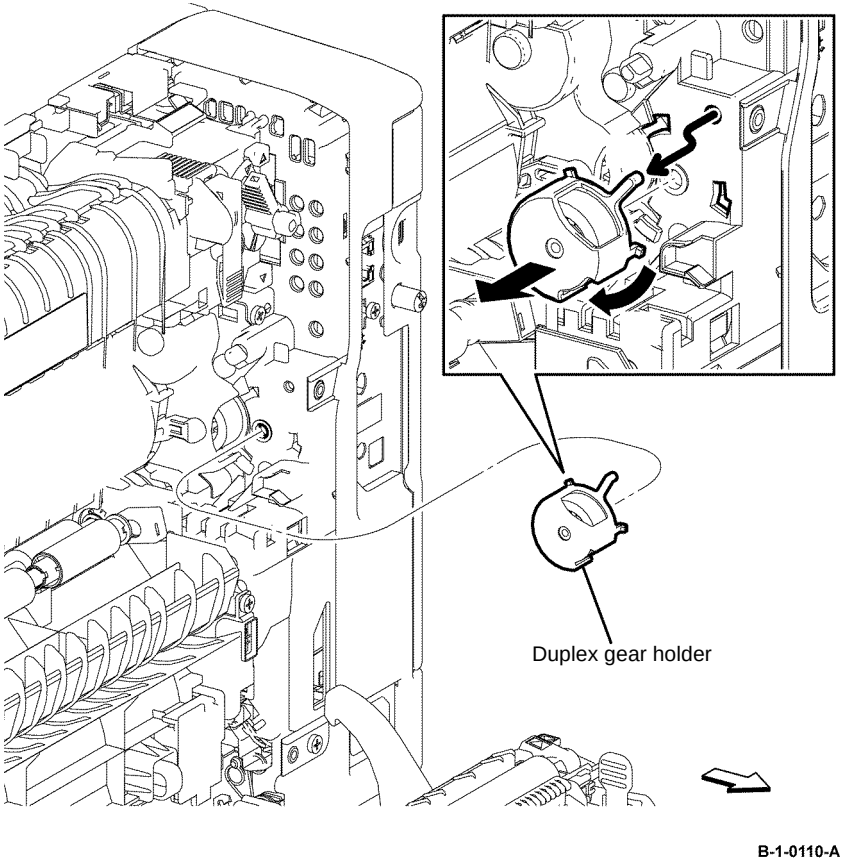

Figure 1 Duplex gear holder removal

3. Remove the duplex in gear from the duplex gear holder, Figure 2.

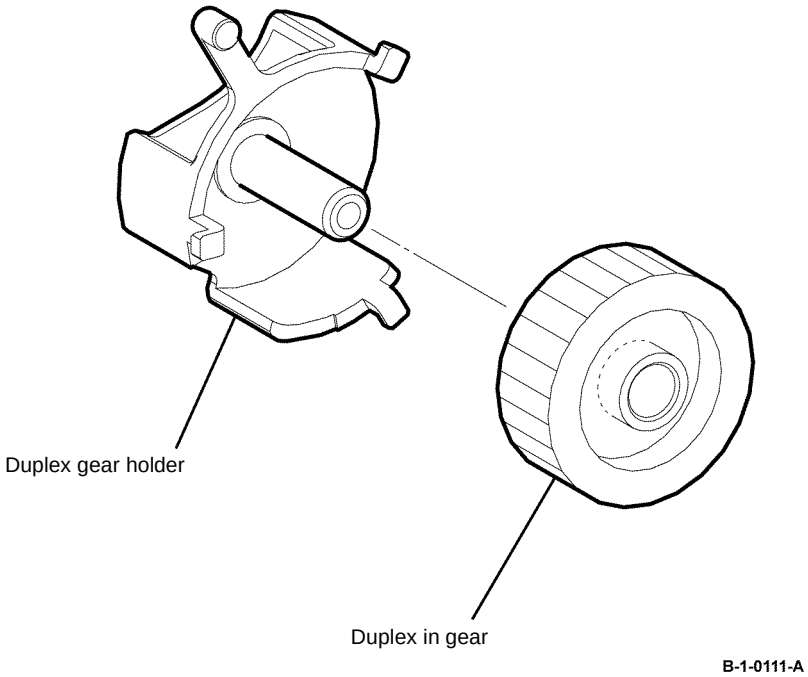

Figure 2 Duplex in gear removal

Replacement

The replacement is the reverse of the removal procedure.

REP 4.1 Front Right Link, Right Link Shaft, Connector Link B405

Parts List on PL 4.1B

Removal

WARNING

Switch off the electricity to the machine, GP 10. Disconnect the power cord from the customer supply while performing tasks that do not need electricity. Electricity can cause death or injury. Moving parts can cause injury.

WARNING

Take care during this procedure. Sharp edges may be present that can cause injury.

1. Open the MSI cover, PL 13.2 Item 99.
2. Pull out the MSI tray assembly, PL 13.2 Item 9.
3. Remove the front cover assembly, REP 19.1.
4. Remove the rear cover assembly, REP 19.13.
5. Remove the right cover, REP 19.7.
6. Remove the scanner assembly, REP 21.1.
7. Remove the six screws (silver, tapping, 8mm) that fix the right chassis, release the hole on the right chassis from the boss on the frame, and then remove the right chassis from the printer, Figure 1.

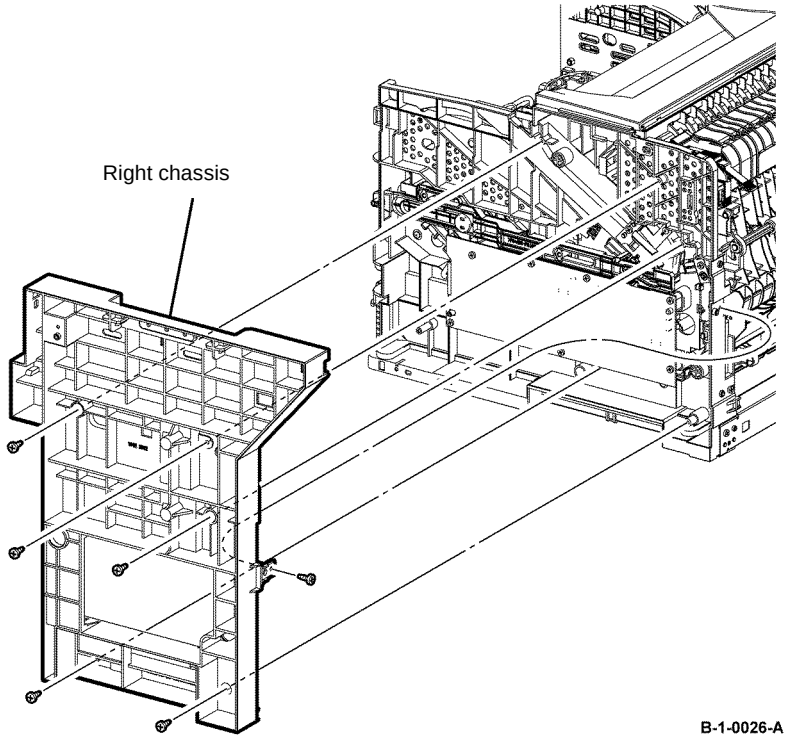

Figure 1 Right chassis removal

8. Release the hook on the link connector, then remove the front right link.

9. Remove the right link shaft by bending it outside from inside the printer, Figure 2.

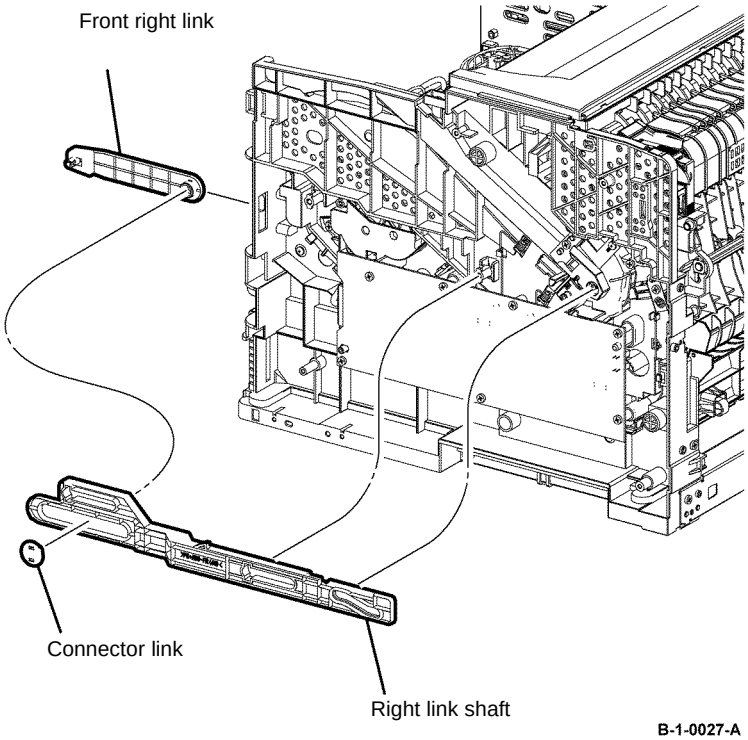

Figure 2 Right link shaft removal

Replacement

The replacement is the reverse of the removal procedure.

REP 4.2 Front Right Link, Right Link Shaft, Link Connector B400

Parts List on PL 4.1A

Removal

WARNING

Switch off the electricity to the machine, GP 10. Disconnect the power cord from the customer supply while performing tasks that do not need electricity. Electricity can cause death or injury. Moving parts can cause injury.

WARNING

Take care during this procedure. Sharp edges may be present that can cause injury.

1. Open the MSI cover, PL 13.2 Item 99.
2. Pull out the MSI tray assembly, PL 13.2 Item 9.
3. Remove the front cover assembly, REP 19.2.
4. Remove the rear cover assembly, REP 19.14.
5. Remove the UI console assembly, REP 1.3.
6. Remove the exit top cover assembly, REP 19.10.
7. Remove the right cover, REP 19.8.
8. Release the hook on the link connector, then remove the front right link.

9. Remove the right shaft link by bending it outside from inside the printer, Figure 1.

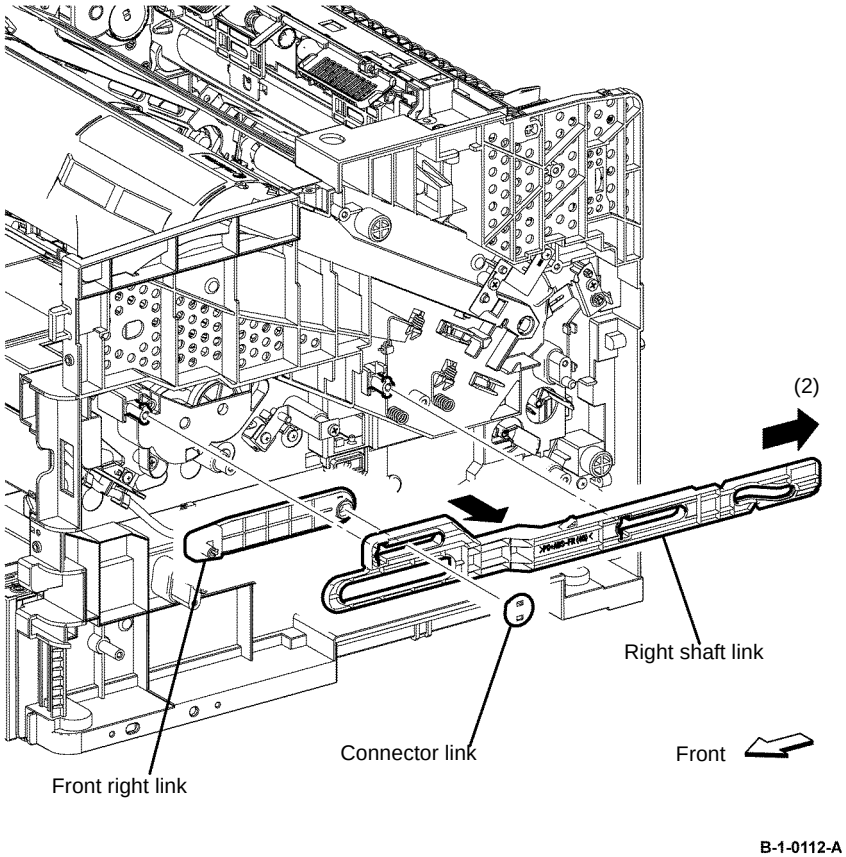

Figure 1 Right link shaft removal

Replacement

The replacement is the reverse of the removal procedure.

REP 4.3 Front Left Link, Left Link Shaft, Connector Link B405

Parts List on PL 4.1B

Removal

WARNING

Switch off the electricity to the machine, GP 10. Disconnect the power cord from the customer supply while performing tasks that do not need electricity. Electricity can cause death or injury. Moving parts can cause injury.

WARNING

Take care during this procedure. Sharp edges may be present that can cause injury.

1. Open the MSI cover, PL 13.2 Item 99.
2. Pull the MSI tray assembly, PL 13.2 Item 9, out of the printer.
3. Remove the front cover assembly, REP 19.1.
4. Remove the Drum Cartridge, REP 8.1.
5. Remove the rear cover assembly, REP 19.13.
6. Remove the ESS window cover assembly, REP 19.3.
7. Remove the WIFI cap cover, REP 19.19.
8. Remove the left cover, REP 19.11.
9. Remove the ESS PWB, REP 18.1.
10. Remove the main drive assembly, REP 3.1.
11. Remove the LVPS PWB, REP 18.3.

12. Remove the MCU cover, then remove two screws (silver, M3, 6mm) from the left side, Figure 1.

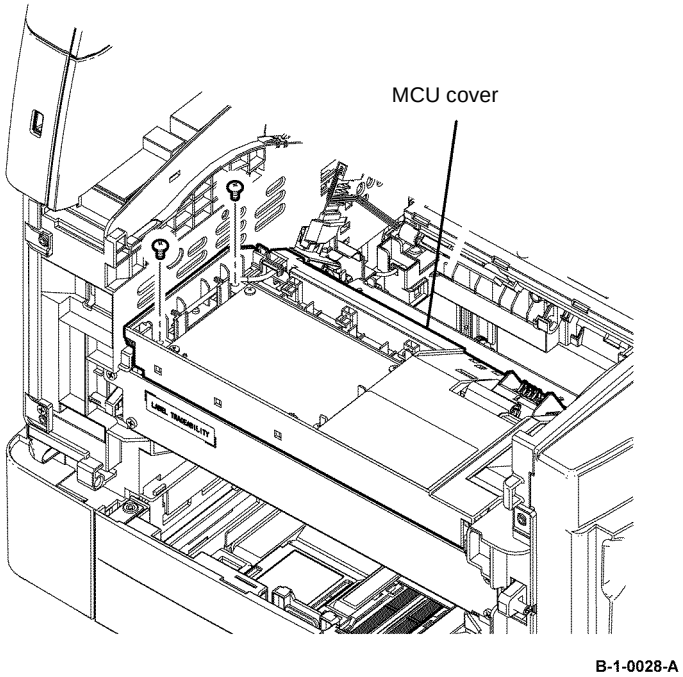

Figure 1 MCU cover removal

13. Remove the LVPS plate, Figure 2.

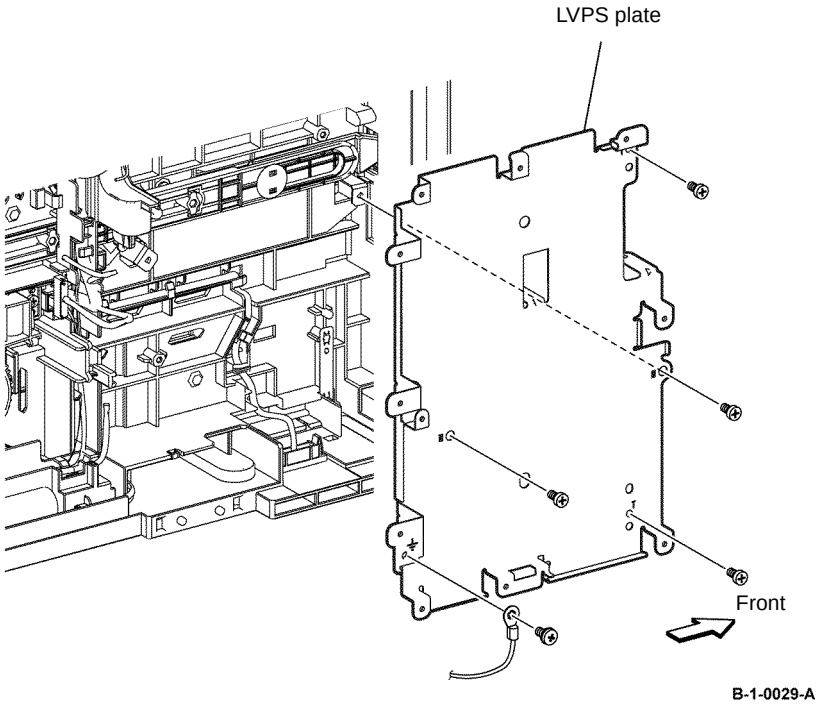

Figure 2 LVPS plate removal

14. Pull out the left link shaft toward the front of the printer, then remove the connector link and the front left link, Figure 3.

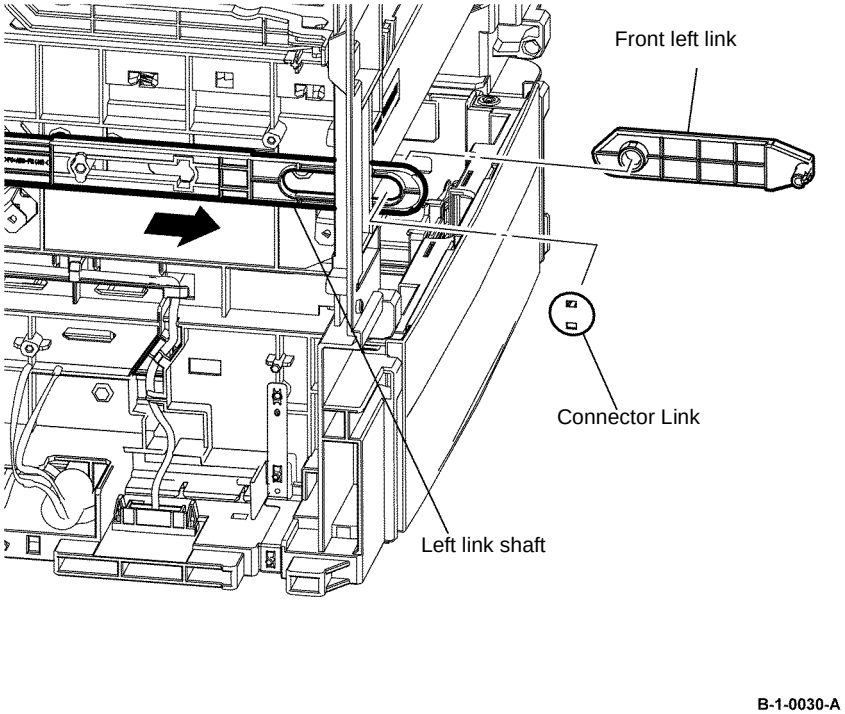

Figure 3 Front left link removal

15. Remove the left Xerographic stopper assembly, PL 4.1B Item 10.
16. Release the two hooks, and then lift the harness guide.
17. Remove the left link shaft by bending it outside from inside the printer, Figure 4.

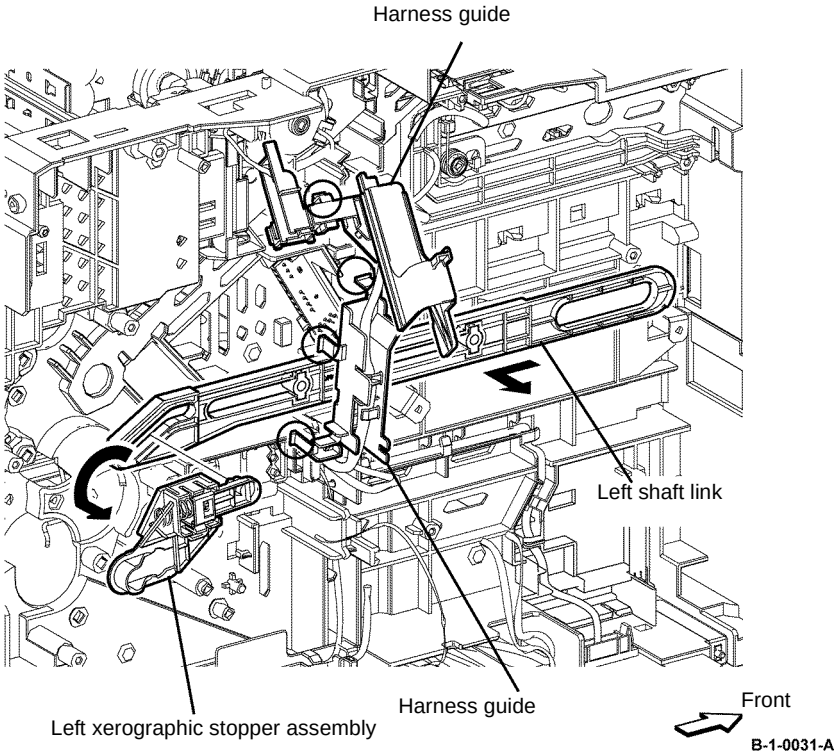

Figure 4 Left link shaft removal

Replacement

1. The replacement is the reverse of the removal procedure.
2. When installing the MCU cover, do not pinch the wire with the screws.

REP 4.4 Front Left Link, Left Link Shaft, Connector Link B400

Parts List on PL 4.1A

Removal

WARNING

Switch off the electricity to the machine, GP 14. Disconnect the power cord from the customer supply while performing tasks that do not need electricity. Electricity can cause death or injury. Moving parts can cause injury.

WARNING

Take care during this procedure. Sharp edges may be present that can cause injury.

1. Open the MSI cover, PL 13.2 Item 99.
2. Pull out the MSI tray assembly, PL 13.2 Item 9.
3. Remove the front cover assembly, REP 19.2.
4. Remove the rear cover assembly, REP 19.14.
5. Remove the UI console assembly, REP 1.3.
6. Remove the exit top cover assembly, REP 19.10.
7. Remove the WIFI cap cover, REP 19.20.
8. Remove the ESS window cover assembly, REP 19.4.
9. Remove the front/left UI cover assembly, REP 1.4.
10. Remove the left cover, REP 19.12.
11. Remove the ESS PWB, REP 18.2.
12. Remove the main drive assembly, REP 3.2.
13. Remove the LVPS PWB, REP 18.8.
14. Remove the MCU cover, then remove two screws (silver, M3, 6mm) from the left side, Figure 1.

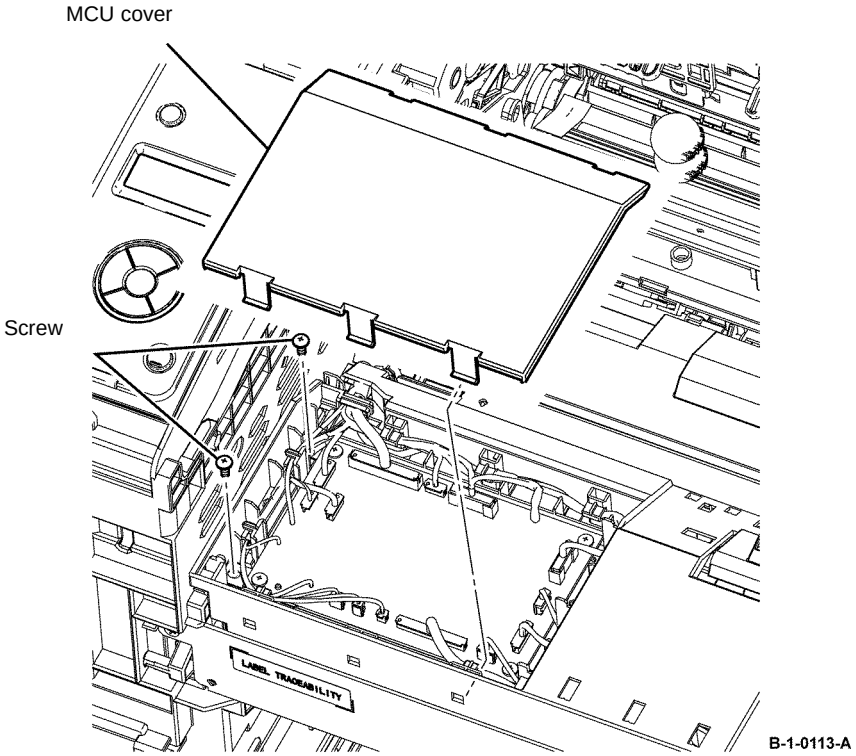

Figure 1 MCU cover removal

15. Remove the LVPS plate, Figure 2.

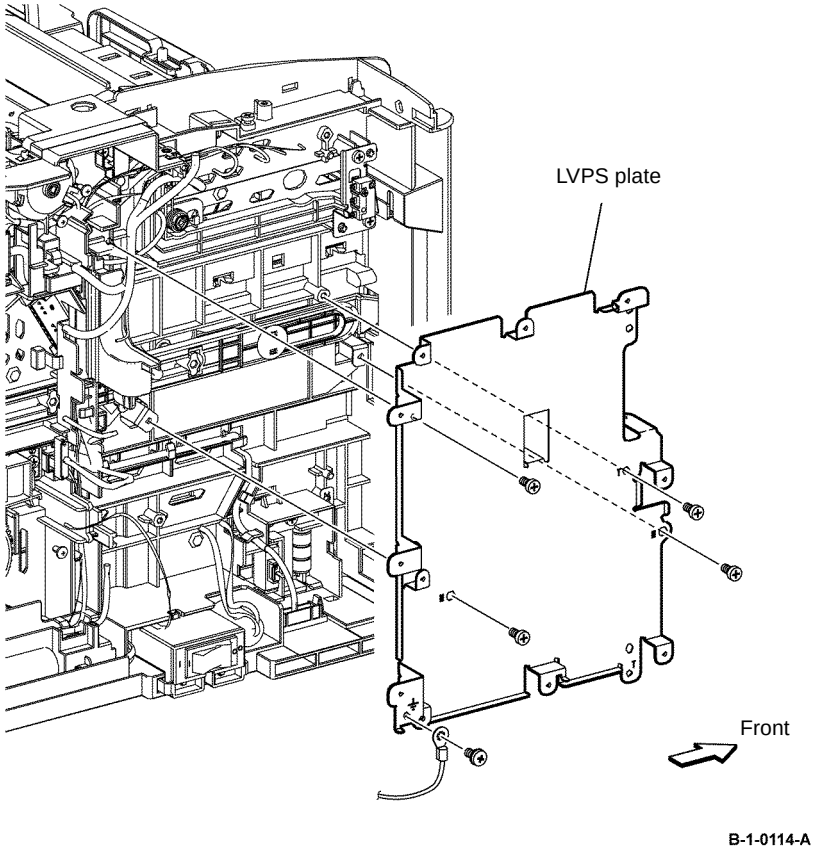

Figure 2 LVPS plate removal

16. Pull out the left link shaft toward the front of the printer, then remove the link connector and the front left link, Figure 3.

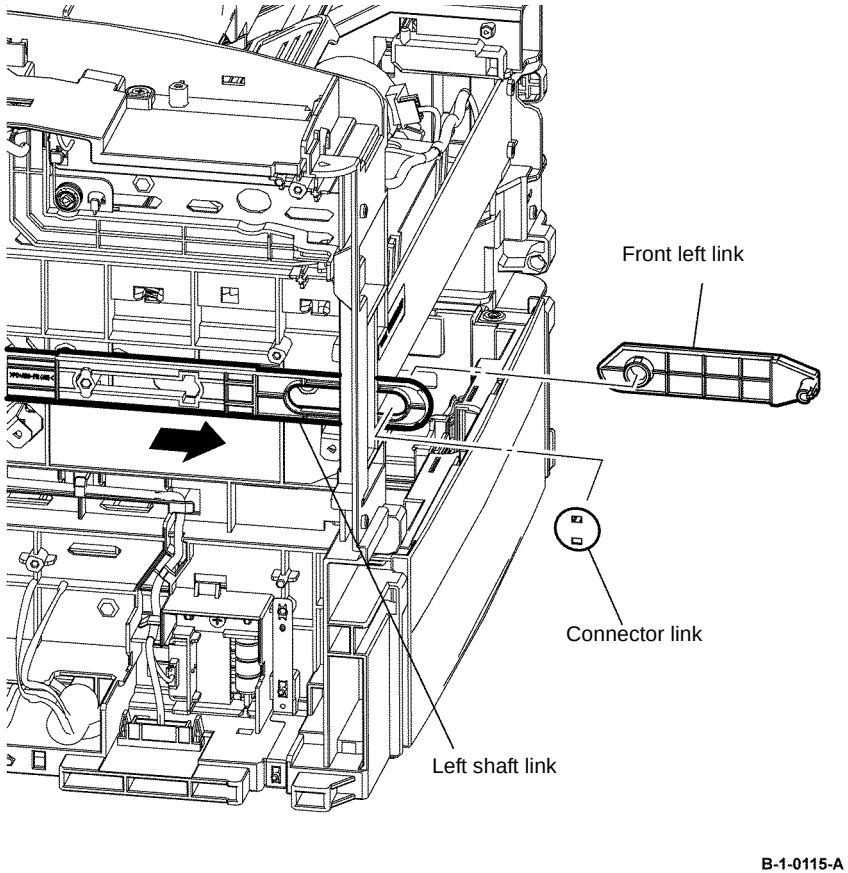

Figure 3 Front left link removal

17. Remove the left xerographic stopper assembly, PL 4.1A Item 10.
18. Release the two hooks, and then lift the harness guide.

19. Remove the left link shaft by bending it outside from inside the printer, Figure 4.

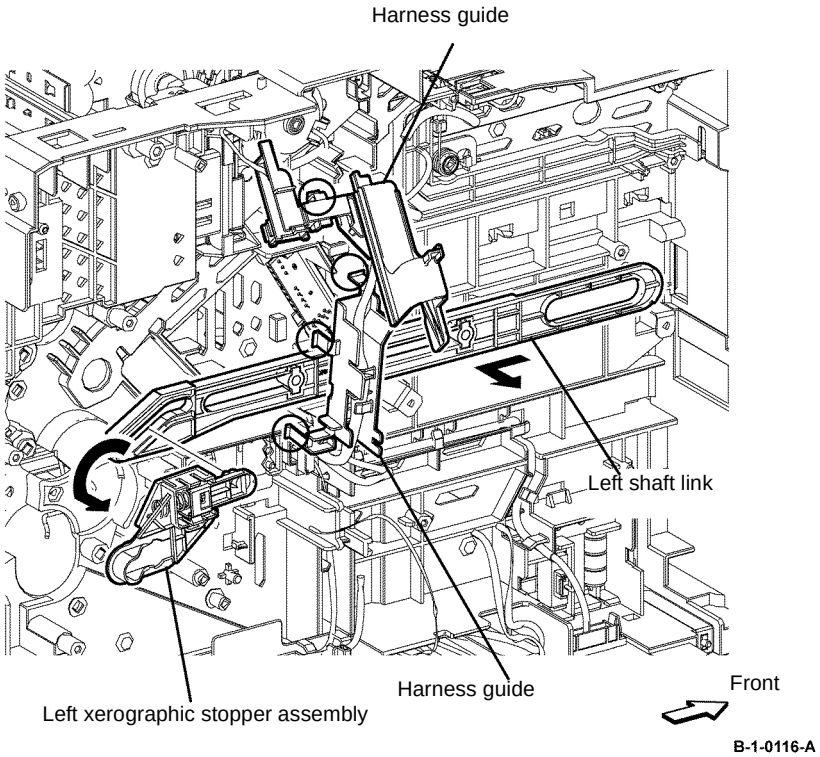

Figure 4 Left link shaft removal

Replacement

1. The replacement is the reverse of the removal procedure.
2. When installing the MCU cover, do not pinch the wire with the screws.

REP 5.1 CRUM Housing Assembly B405

Parts List on PL 5.1

Removal

WARNING

Switch off the electricity to the machine, GP 10. Disconnect the power cord from the customer supply while performing tasks that do not need electricity. Electricity can cause death or injury. Moving parts can cause injury.

WARNING

Take care during this procedure. Sharp edges may be present that can cause injury.

Figure 1 ESD symbol

CAUTION

Observe ESD procedures during this procedure.

1. Open the front cover assembly, PL 19.1B Item 98.
2. Remove the Drum Cartridge, REP 8.1.
3. Release the hook, open the CRUM housing assembly, Figure 2.
4. Remove the toner CRUM connector assembly, from the CRUM swing housing, Figure 2.
5. Disengage P/J253, Figure 2.

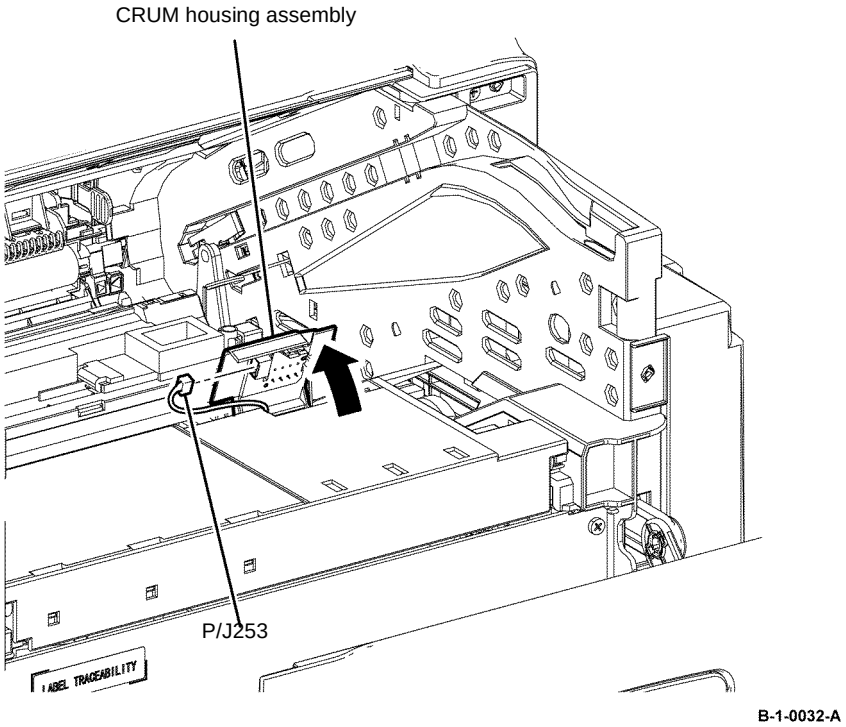

Figure 2 Toner CRUM connector assembly removal

6. Release one boss of the CRUM swing housing, then remove the CRUM swing housing from the printer, Figure 3.

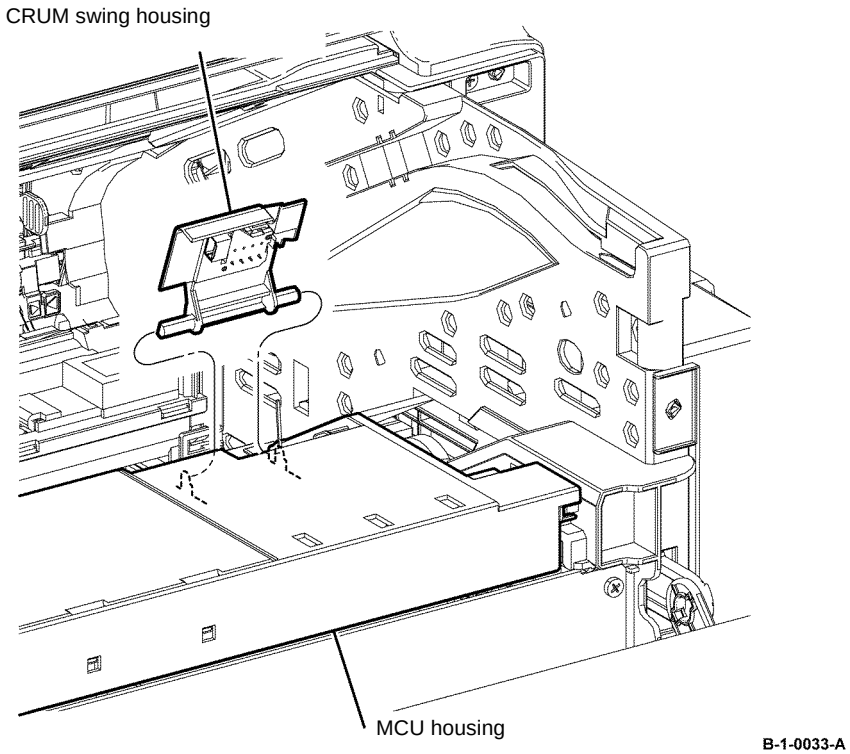

Figure 3 CRUM swing housing removal

Replacement

1. The replacement is the reverse of the removal procedure.

2. When closing the CRUM housing assembly, ensure the CRUM swing spring is installed as shown, Figure 4.

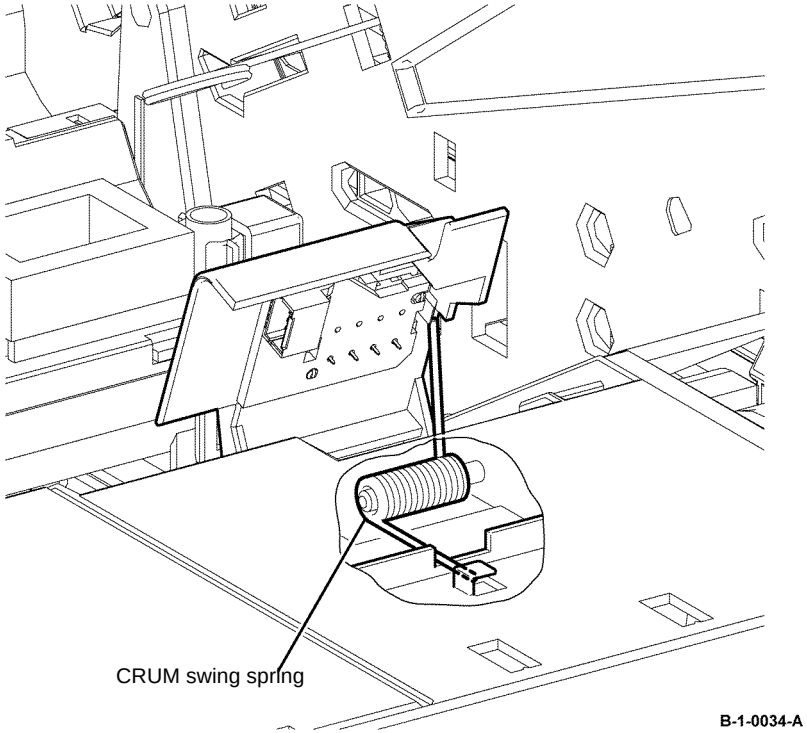

Figure 4 CRUM swing spring installation

REP 5.2 CRUM Housing Assembly B400

Parts List on PL 5.1

Removal

WARNING

Switch off the electricity to the machine, GP 10. Disconnect the power cord from the customer supply while performing tasks that do not need electricity. Electricity can cause death or injury. Moving parts can cause injury.

WARNING

Take care during this procedure. Sharp edges may be present that can cause injury.

Figure 1 ESD symbol

CAUTION

Observe ESD procedures during this procedure.

1. Open the front cover assembly, PL 19.1A Item 98.
2. Remove the Drum cartridge, REP 8.2.
3. Release the hook, open the CRUM housing assembly, Figure 2.
4. Remove the toner CRUM connector assembly, from the CRUM swing housing, Figure 2.
5. Disengage P/J253, Figure 2.

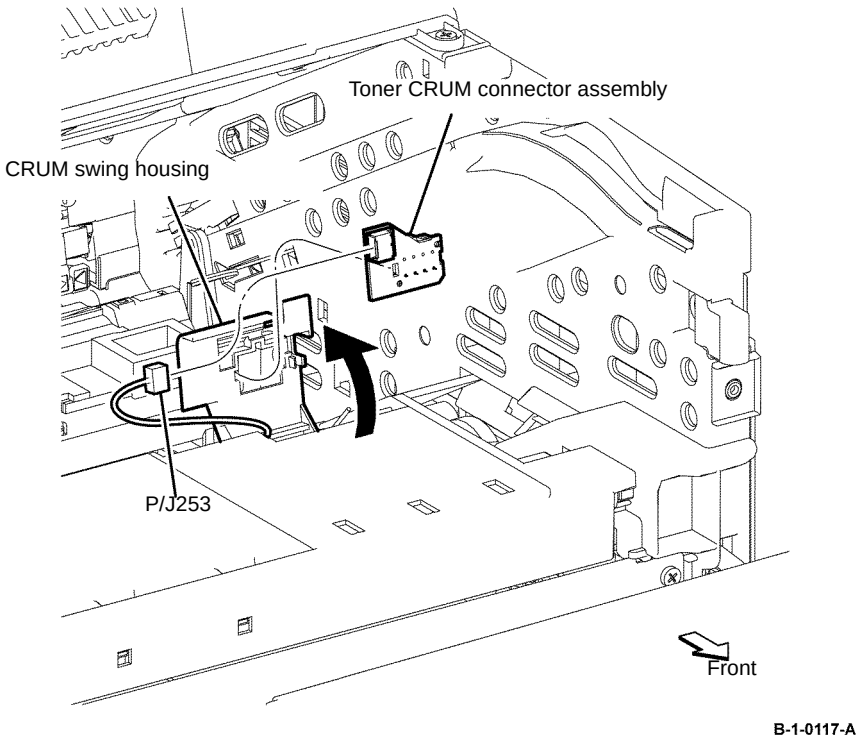

Figure 2 Toner CRUM connector assembly removal

6. Release two bosses of the CRUM swing housing, then remove the CRUM swing housing from the printer, Figure 3.

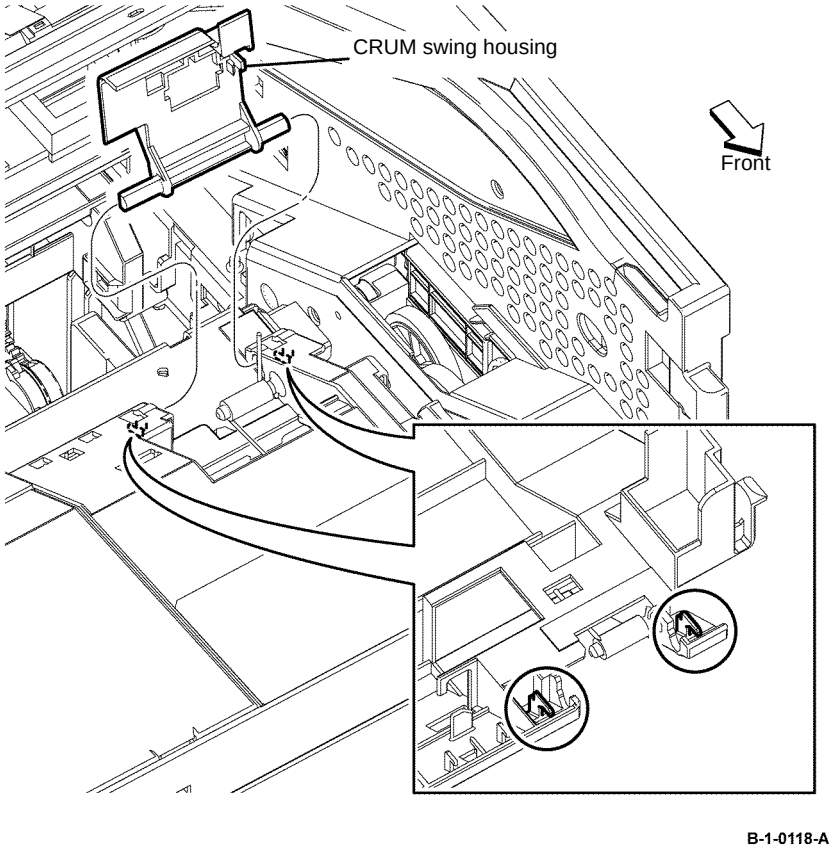

Figure 3 CRUM swing housing removal

Replacement

1. The replacement is the reverse of the removal procedure.

2. When closing the CRUM housing assembly, ensure the CRUM swing spring is installed as shown, Figure 4.

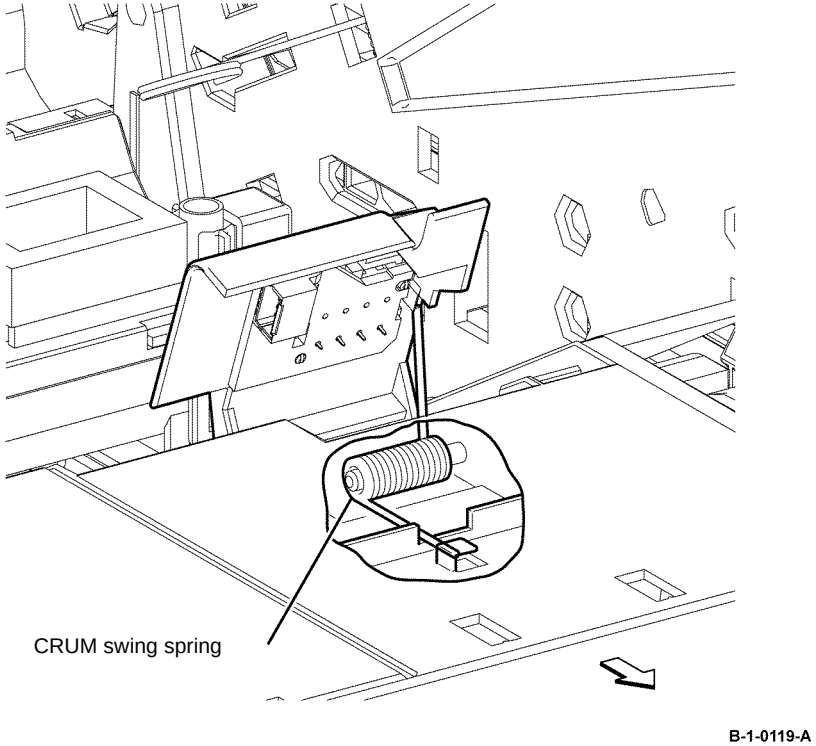

Figure 4 CRUM swing spring installation

REP 5.3 Dispenser Drive Assembly B405

Parts List on PL 5.1

Removal

WARNING

Switch off the electricity to the machine, GP 10. Disconnect the power cord from the customer supply while performing tasks that do not need electricity. Electricity can cause death or injury. Moving parts can cause injury.

WARNING

Take care during this procedure. Sharp edges may be present that can cause injury.

1. Open the MSI cover, PL 13.2 Item 99.
2. Pull out the MSI tray assembly, PL 13.2 Item 9.
3. Remove the front cover assembly, REP 19.1.
4. Remove the rear cover assembly, REP 19.13.
5. Remove the right cover, REP 19.7.
6. Remove the scanner assembly, REP 21.1.
7. Remove the six screws (silver, tapping, 8mm) that fix the right chassis, release the hole on the right chassis from the boss on the frame, and then remove the right chassis from the printer, Figure 1.

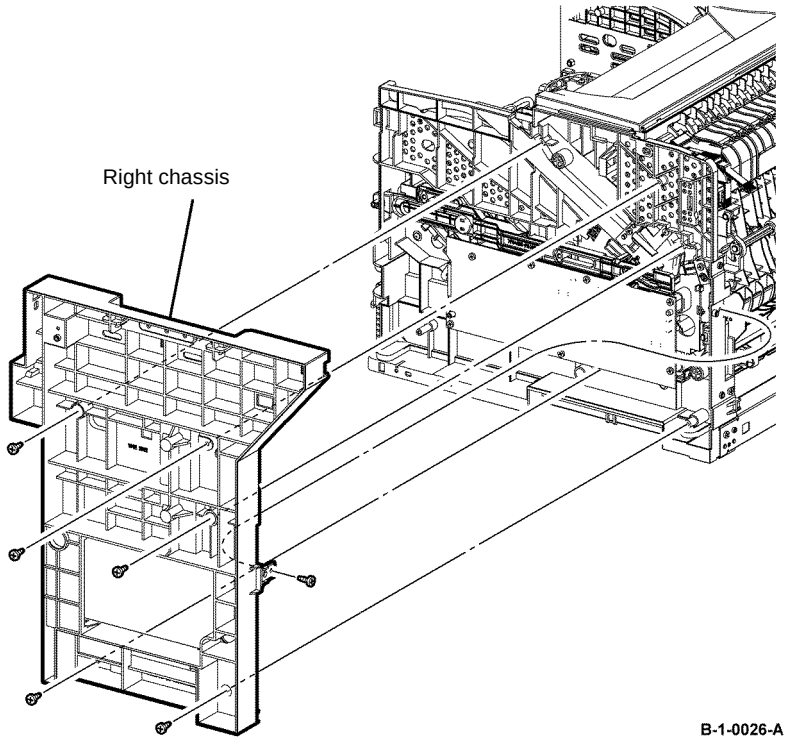

Figure 1 Right chassis removal

8. Remove the HVPS, REP 18.5.

9. From the right shaft link, release the hook on the link connector, that fixes the right front link, then remove the link cover, Figure 2.
10. Release the right shaft link from the hook on the printer, then remove the right shaft link, Figure 2.

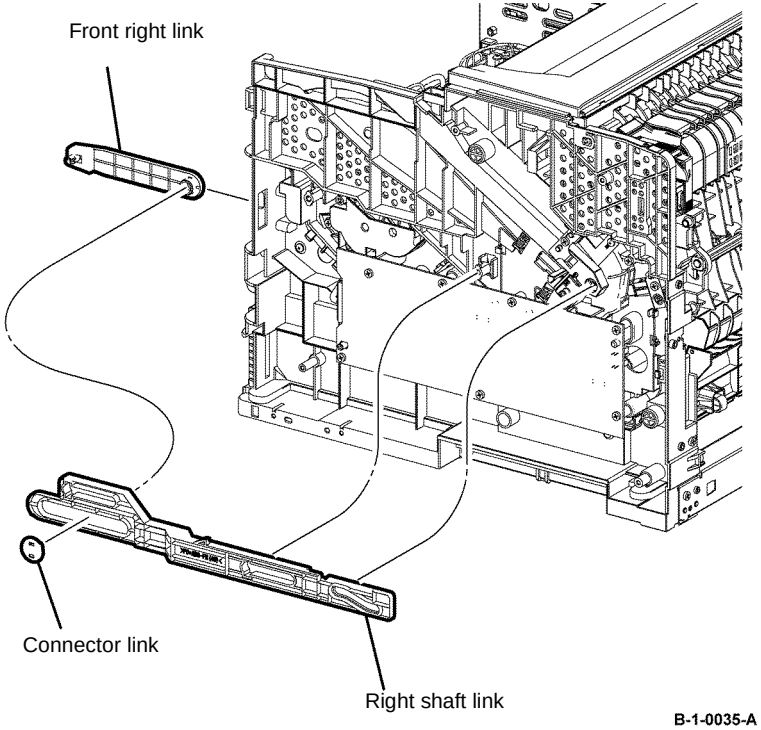

Figure 2 Right shaft link removal

11. Remove two screws (silver, tapping, 10mm), that fix the dispenser drive assembly, release one boss, then remove the dispenser drive assembly, Figure 3.

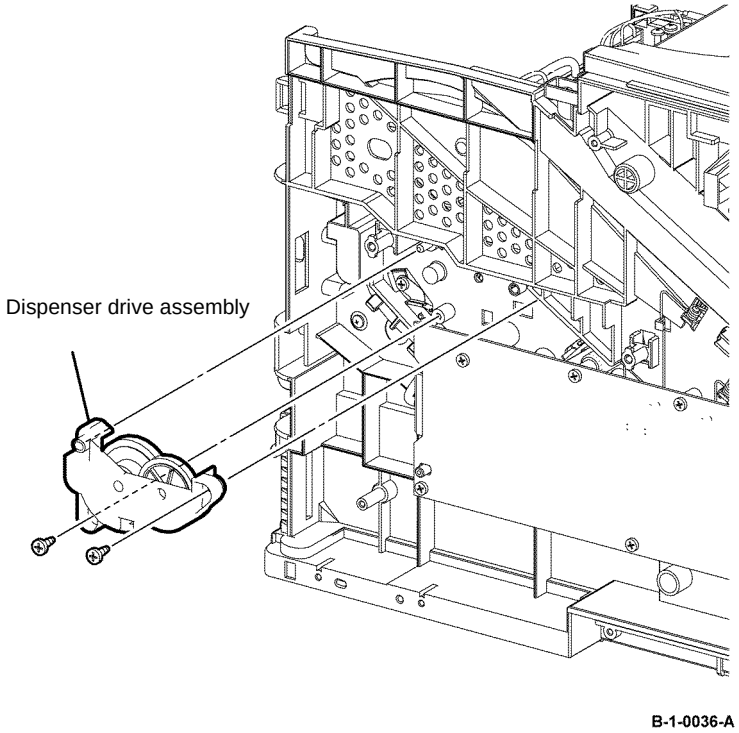

Figure 3 Dispenser drive assembly removal

Replacement

The replacement is the reverse of the removal procedure.

REP 5.4 Dispenser Drive Assembly B400

Parts List on PL 5.1

Removal

WARNING

Switch off the electricity to the machine, GP 10. Disconnect the power cord from the customer supply while performing tasks that do not need electricity. Electricity can cause death or injury. Moving parts can cause injury.

WARNING

Take care during this procedure. Sharp edges may be present that can cause injury.

1. Open the MSI cover, PL 13.2 Item 99.
2. Pull out the MSI tray assembly, PL 13.2 Item 9.
3. Remove the front cover assembly, REP 19.2.
4. Remove the rear cover assembly, REP 19.14.
5. Remove the UI console assembly, REP 1.3.
6. Remove the exit top cover assembly, REP 19.10.
7. Remove the right cover, REP 19.8.
8. Release the hook on the front right link, then remove the connector link, and the front right link from the right shaft link, Figure 1.
9. Remove the right shaft link by bending it out from inside the printer, Figure 1.

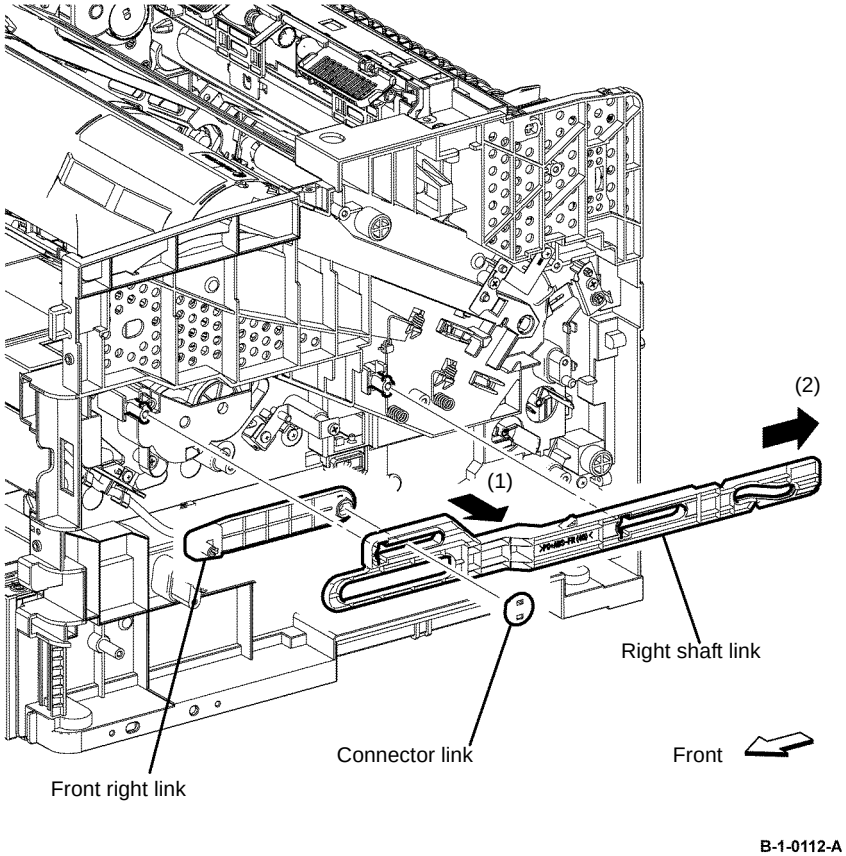

Figure 1 Right link shaft removal

10. Remove two screws (silver, tapping, 10mm), that fix the dispenser drive assembly, then remove the dispenser drive assembly, Figure 2.

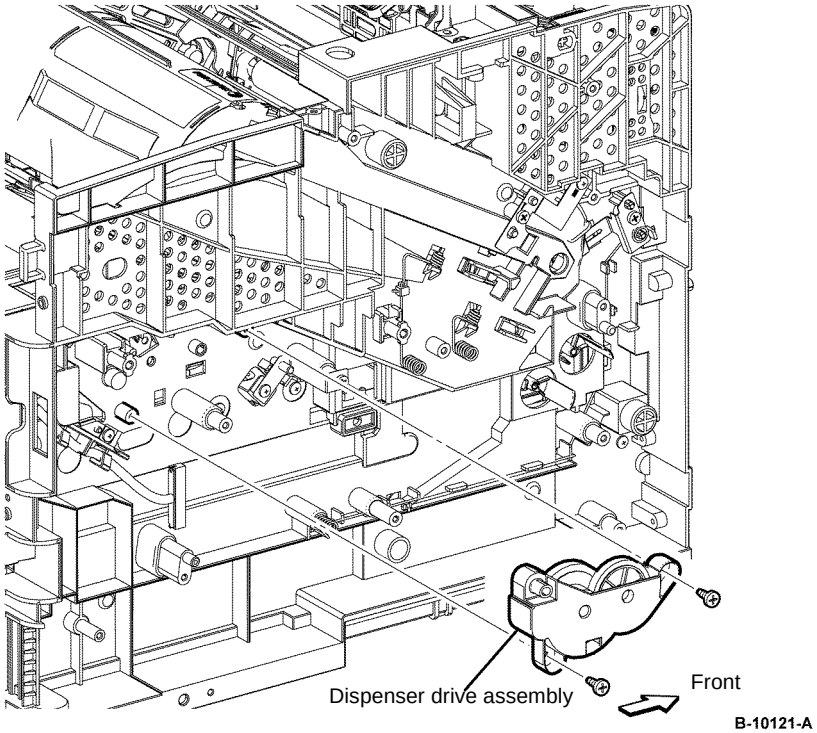

Figure 2 Dispenser drive assembly removal

Replacement

The replacement is the reverse of the removal procedure.

REP 5.5 Dispenser Motor B405

Parts List on PL 5.1

Removal

WARNING

Switch off the electricity to the machine, GP 10. Disconnect the power cord from the customer supply while performing tasks that do not need electricity. Electricity can cause death or injury. Moving parts can cause injury.

WARNING

Take care during this procedure. Sharp edges may be present that can cause injury.

1. Open the MSI cover, PL 13.2 Item 99.
2. Pull out the MSI tray assembly, PL 13.2 Item 9.
3. Remove the front cover assembly, REP 19.1.
4. Remove the Drum cartridge, REP 8.1.
5. Remove the rear cover assembly, REP 19.13.
6. Remove the right cover, REP 19.7.
7. Disengage all connectors from the MCU PWB, PL 18.2 Item 2.
8. Disengage PJ253 from the CRUM housing assembly, PL 5.1 Item 1.
9. Release the harness from the harness guide installed on the MCU Housing, PL 18.2 Item 4.

10. Remove two screws (silver, M3, 6mm) that fix the MCU housing, release the hook, then remove the MCU housing from the printer, Figure 1.

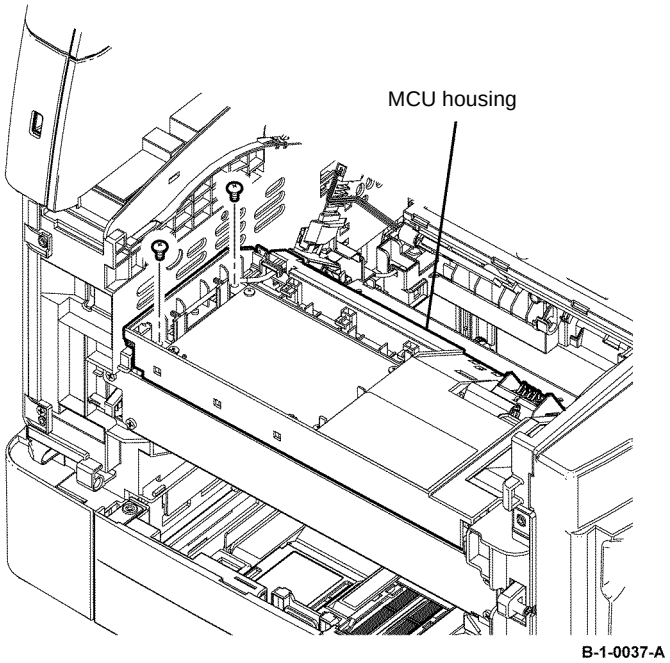

Figure 1 MCU housing removal

11. Disengage P/J111 of the harness connected to the dispenser motor, Figure 2.
12. Remove one screw (silver, tapping, 8mm) that fixes the dispenser motor, rotate the dispenser motor anti-clockwise and remove, Figure 2.

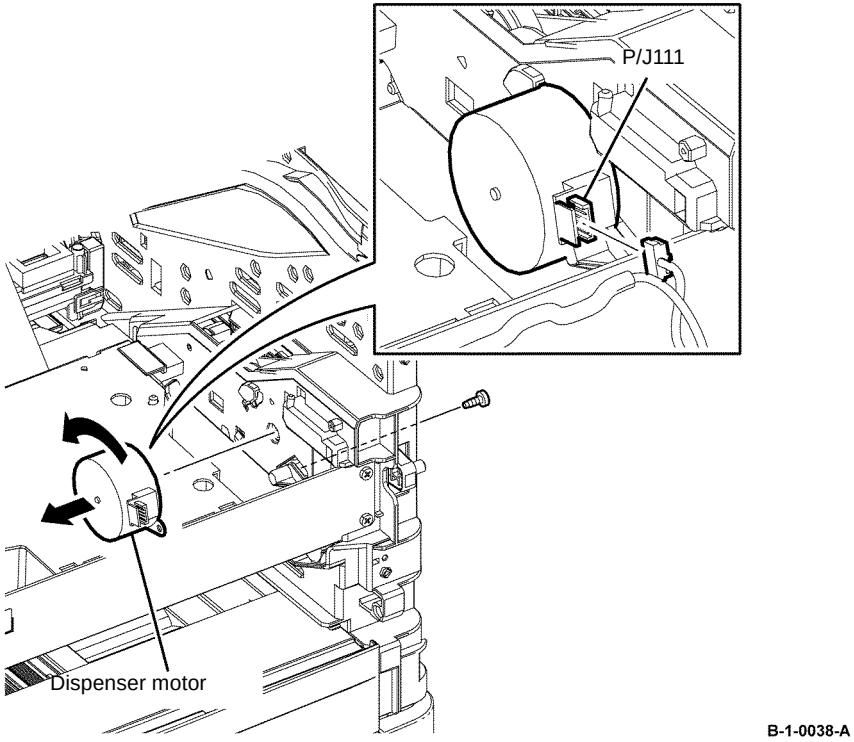

Figure 2 Dispenser motor removal

Replacement

1. The replacement is the reverse of the removal procedure.

2. When installing the dispenser motor, secure the dispenser motor and earth wire together with the screw, Figure 3.

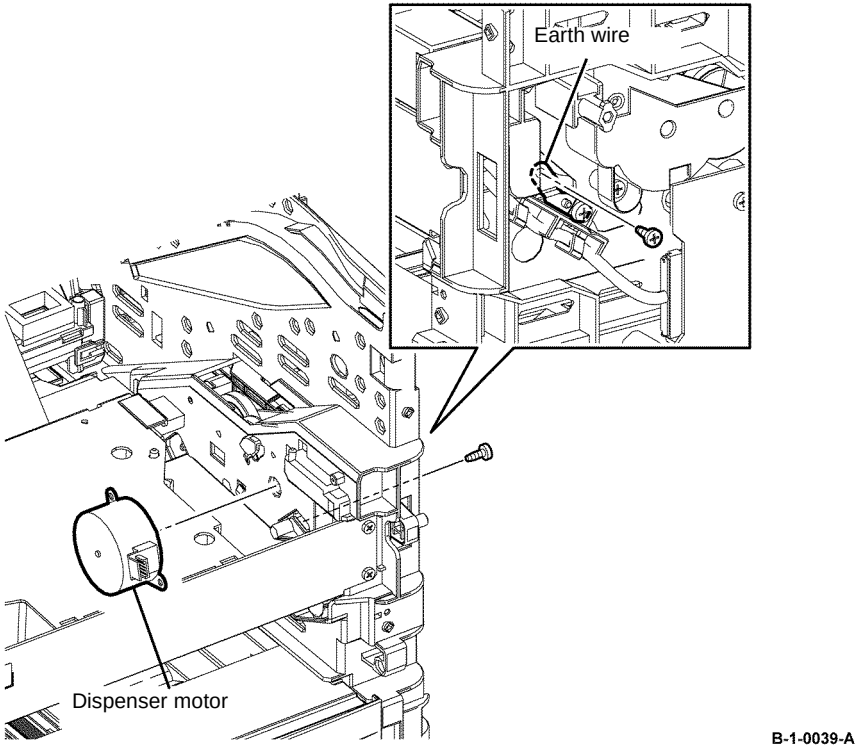

Figure 3 Dispenser motor installation

REP 5.6 Dispenser Motor B400

Parts List on PL 5.1

Removal

WARNING

Switch off the electricity to the machine, GP 10. Disconnect the power cord from the customer supply while performing tasks that do not need electricity. Electricity can cause death or injury. Moving parts can cause injury.

WARNING

Take care during this procedure. Sharp edges may be present that can cause injury.

Figure 1 ESD Symbol

CAUTION

Observe ESD procedures during this procedure.

1. Open the MSI cover, PL 13.2 Item 99.
2. Pull out the MSI tray assembly, PL 13.2 Item 9.
3. Remove the front cover assembly, REP 19.2.
4. Remove the Drum cartridge, REP 8.2.
5. Remove the rear cover assembly, REP 19.14.
6. Remove the UI console assembly, REP 1.3.
7. Remove the exit top cover assembly, REP 19.10.
8. Remove the right cover, REP 19.8.
9. Disengage all connectors from the MCU PWB, PL 18.2 Item 2.
10. Disengage P/J253 from the CRUM housing assembly, PL 5.1 Item 1.
11. Release the harness from the harness guide installed on the MCU Housing, PL 18.2 Item 4.

12. Remove two screws (silver, M3, 6mm) that fix the MCU housing, Figure 2.

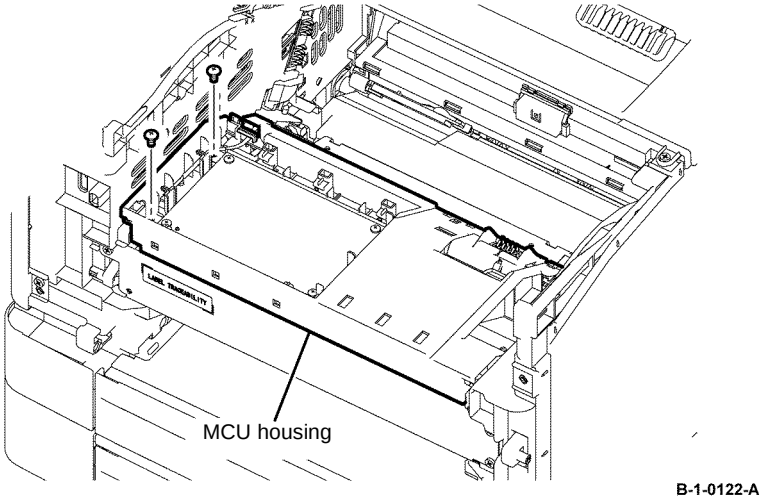

Figure 2 MCU housing screw removal

13. Rotate the MCU housing in the arrowed direction, release the hook, then MCU housing from the printer, Figure 3.

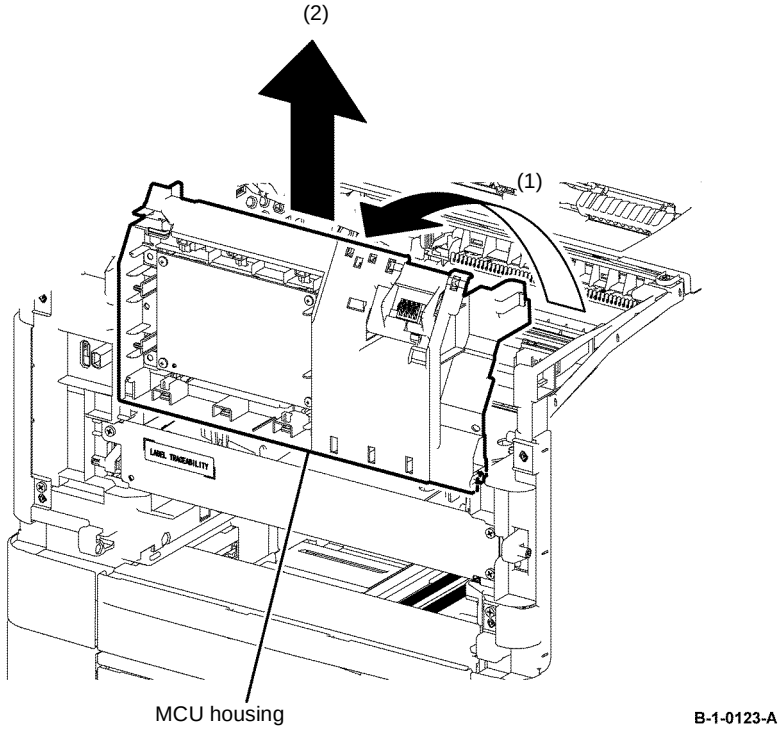

Figure 3 MCU housing removal

14. Disengage P/J111 of the harness connected to the dispenser motor.

15. Remove one screw (silver, tapping, 8mm) that fixes the dispenser motor, rotate the dispenser motor anti-clockwise and remove, Figure 4.

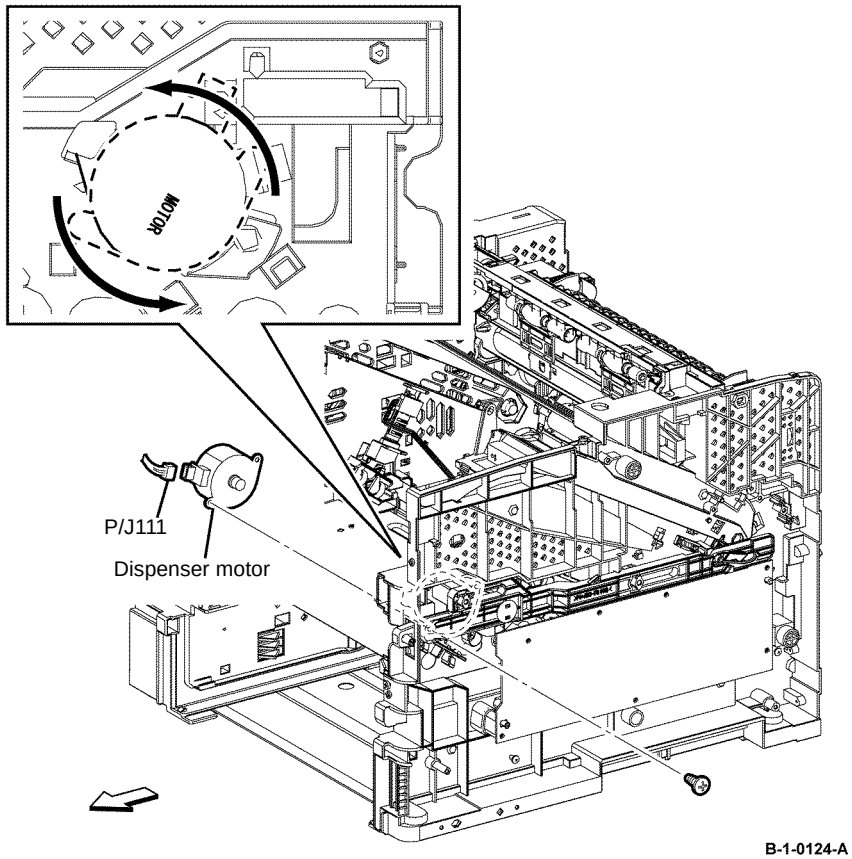

Figure 4 Dispenser motor removal

2. When installing the dispenser motor, secure the dispenser motor and earth wire together with the screw, Figure 5.

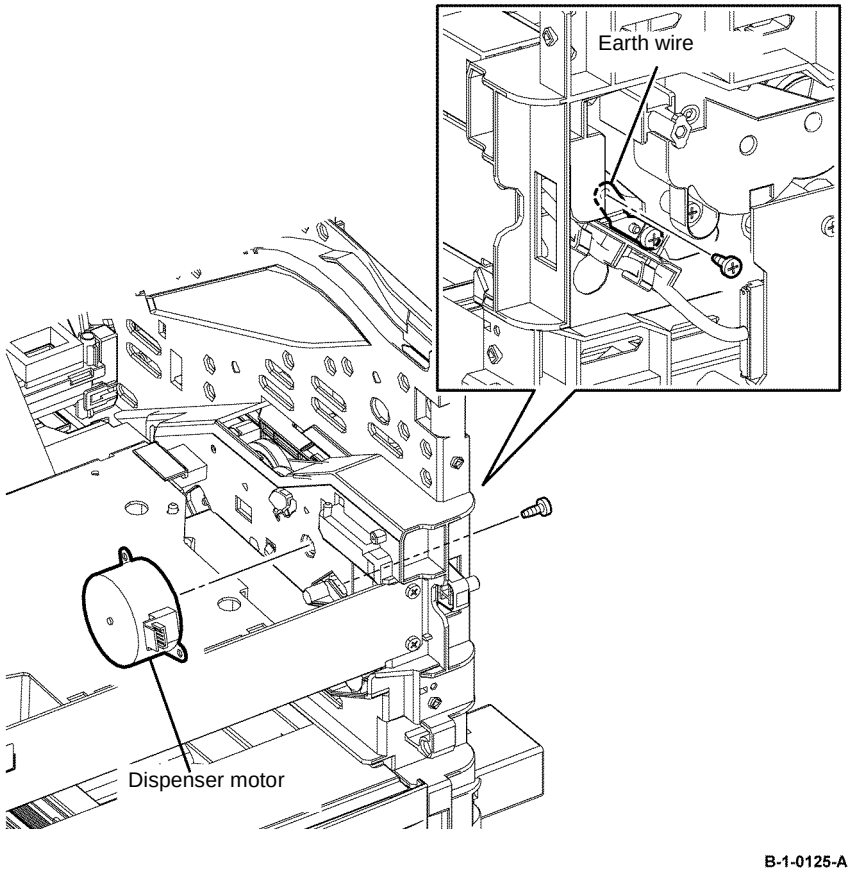

Figure 5 Dispenser motor installation

Replacement

1. The replacement is the reverse of the removal procedure.

REP 5.7 Xerographic Connector Assembly B405

Parts List on PL 5.1

Removal

WARNING

Switch off the electricity to the machine, GP 10. Disconnect the power cord from the customer supply while performing tasks that do not need electricity. Electricity can cause death or injury. Moving parts can cause injury.

WARNING

Take care during this procedure. Sharp edges may be present that can cause injury.

Figure 1 ESD symbol

CAUTION

Observe ESD procedures during this procedure.

1. Open the front cover assembly, PL 19.1B Item 98.
2. Remove the drum cartridge, REP 8.1.
3. Release three hooks, then remove the MCU cover, PL 18.2 Item 1.
4. Disengage P/J25 from the MCU PWB, PL 18.2 Item 2.
5. Release the yellow harness from the harness guides around the MCU PWB.
6. Release the hook that fixes the xerographic connector assembly, and then remove the xerographic connector assembly, Figure 2.
7. Pull the yellow harness to create slack and disengage P/J254 from the Xerographic connector assembly, Figure 2.

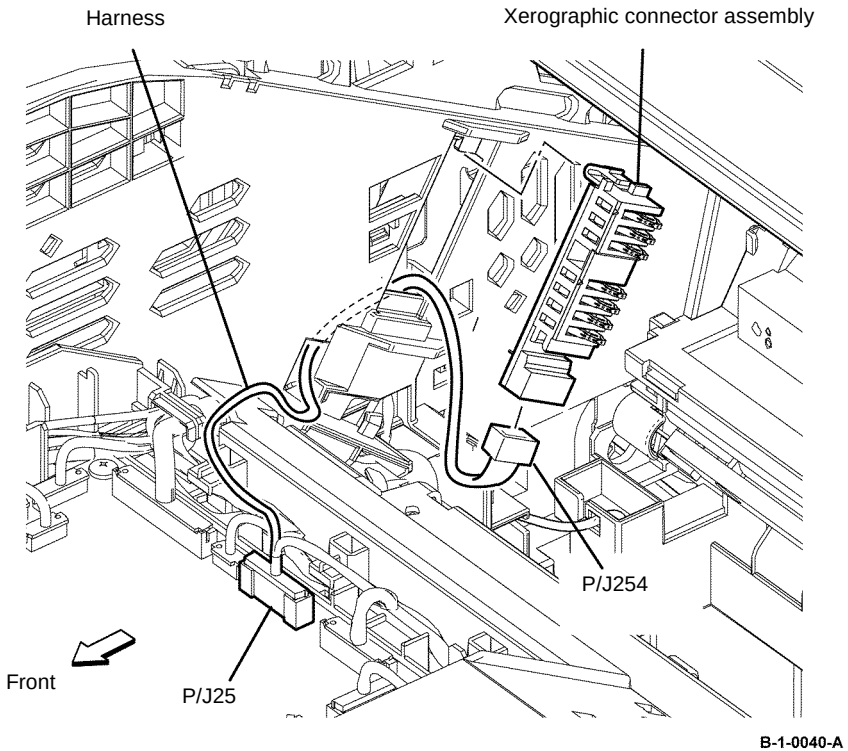

Figure 2 Xerographic connector assembly removal

Replacement

The replacement is the reverse of the removal procedure.

REP 5.8 Xerographic Connector Assembly B400

Parts List on PL 5.1

Removal

WARNING

Switch off the electricity to the machine, GP 10. Disconnect the power cord from the customer supply while performing tasks that do not need electricity. Electricity can cause death or injury. Moving parts can cause injury.

WARNING

Take care during this procedure. Sharp edges may be present that can cause injury.

Figure 1 ESD symbol

CAUTION

Observe ESD procedures during this procedure.

1. Open the front cover assembly, PL 19.1A Item 98.
2. Remove the drum cartridge, REP 8.2.
3. Release three hooks, and then remove the MCU cover, PL 18.2 Item 1.
4. Disengage P/J25 from the MCU PWB, PL 18.2 Item 2.
5. Release the yellow harness from the harness guides around the MCU PWB.
6. Release the hook that fixes the xerographic connector assembly, and then remove the xerographic connector assembly, Figure 2.
7. Pull the yellow harness to create slack and disengage P/J254 from the xerographic connector assembly, Figure 2.

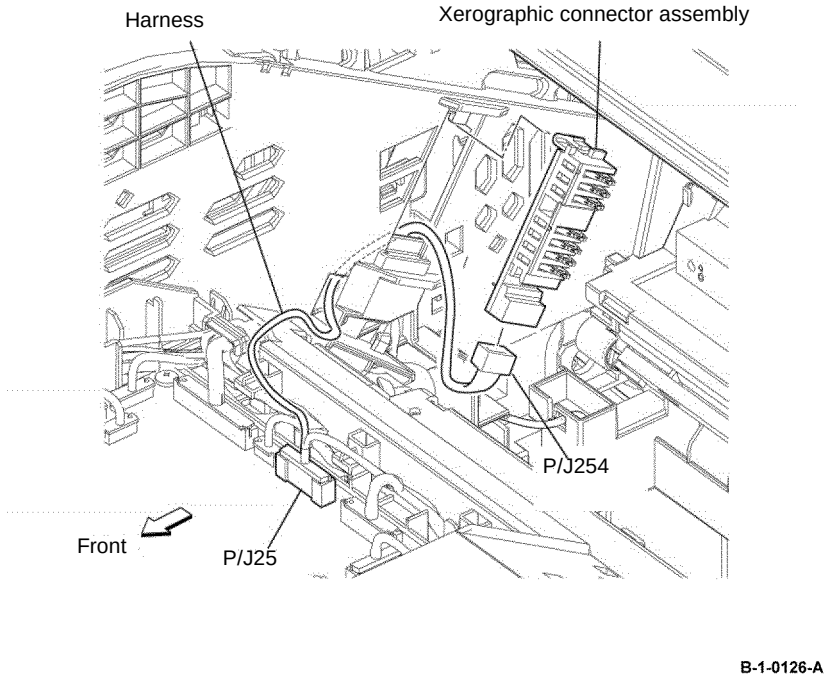

Figure 2 Xerographic connector assembly removal

Replacement

The replacement is the reverse of the removal procedure.

REP 6.1 CRU Transfer Roller Assembly B405

Parts List on PL 6.1

Removal

WARNING

Switch off the electricity to the machine, GP 10. Disconnect the power cord from the customer supply while performing tasks that do not need electricity. Electricity can cause death or injury. Moving parts can cause injury.

1. Open the rear cover assembly, PL 19.2B Item 99.
2. Release two hooks that fix the CRU transfer roller assembly, then remove the CRU transfer roller assembly by rotating it in the arrowed direction, Figure 1.

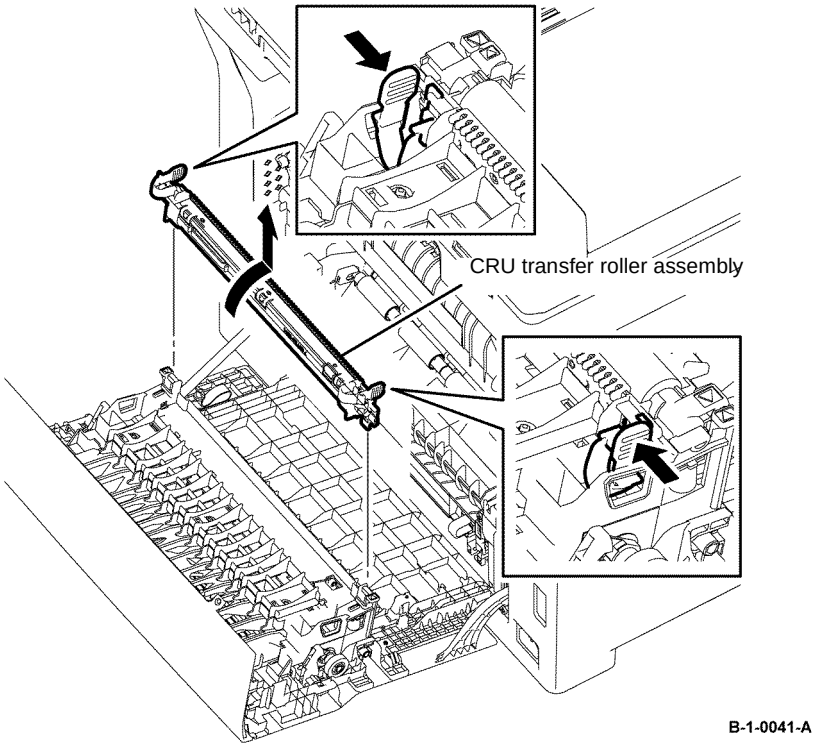

Figure 1 CRU transfer roll assembly removal

Replacement

1. The replacement is the reverse of the removal procedure.
2. If a new CRU transfer roller assembly is installed, enter dC135 HFSI Counter. Reset the HFSI counter 950-824.

REP 6.2 CRU Transfer Roller Assembly B400

Parts List on PL 6.1

Removal

WARNING

Switch off the electricity to the machine, GP 10. Disconnect the power cord from the customer supply while performing tasks that do not need electricity. Electricity can cause death or injury. Moving parts can cause injury.

1. Open the rear cover assembly, PL 19.2A Item 99.
2. Press the two hooks on the left and right sides of the CRU transfer roller assembly to unlock the CRU transfer roller assembly, then remove the CRU transfer roller assembly by rotating it along the axis between the bosses, Figure 1.

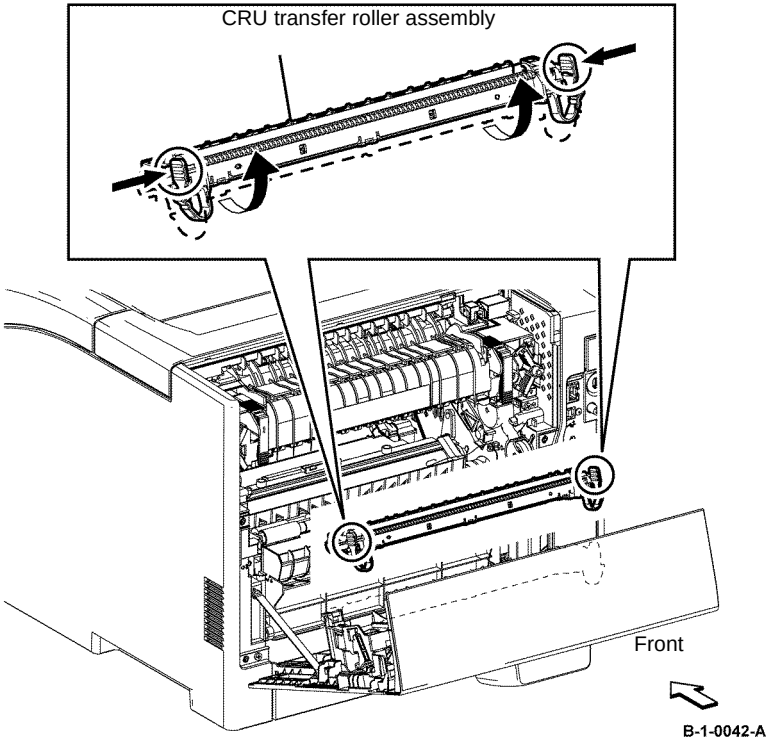

Figure 1 CRU transfer roll assembly removal

Replacement

1. The replacement is the reverse of the removal procedure.
2. If a new CRU transfer roller assembly is installed, enter dC135 HFSI Counter. Reset the HFSI counter 950-824.

REP 7.1 Fuser B405

Parts List on PL 7.1

Removal

WARNING

Switch off the electricity to the machine, GP 10. Disconnect the power cord from the customer supply while performing tasks that do not need electricity. Electricity can cause death or injury. Moving parts can cause injury.

1. Open the rear cover assembly, PL 19.2B Item 99.
2. Rotate the two levers that lock the fuser in the arrowed direction to unlock and remove the fuser, Figure 1.

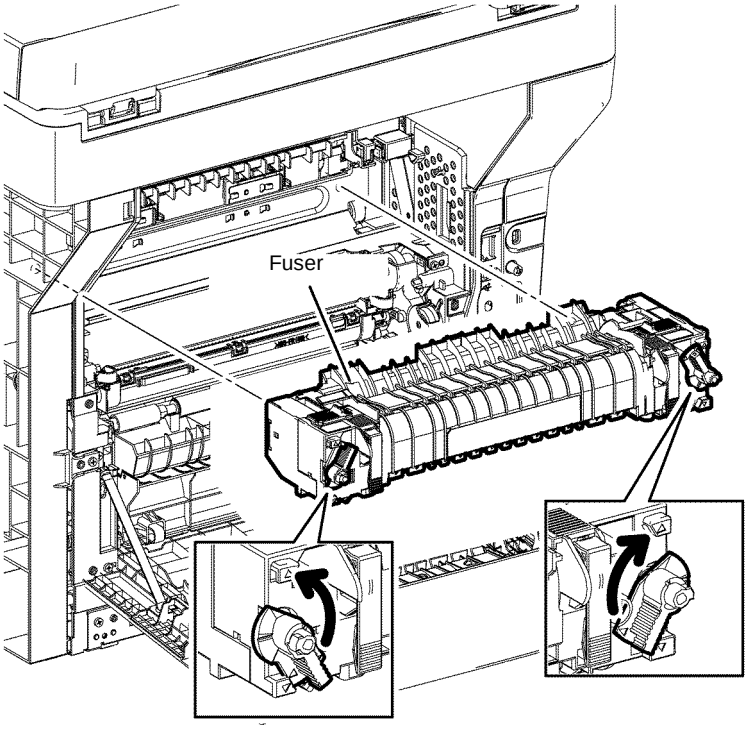

Figure 1 Fuser removal

Replacement

1. The replacement is the reverse of the removal procedure.
2. If a new fuser is installed, enter dC135 HFSI Counter. Reset the HFSI counters that follow:
   - 950-800.
   - 950-804.

REP 7.2 Fuser B400

Parts List on PL 7.1

Removal

WARNING

Switch off the electricity to the machine, GP 10. Disconnect the power cord from the customer supply while performing tasks that do not need electricity. Electricity can cause death or injury. Moving parts can cause injury.

1. Open the rear cover assembly, PL 19.2A Item 99.
2. Rotate the two levers that lock the fuser in the arrowed direction to unlock and remove the fuser, Figure 1.

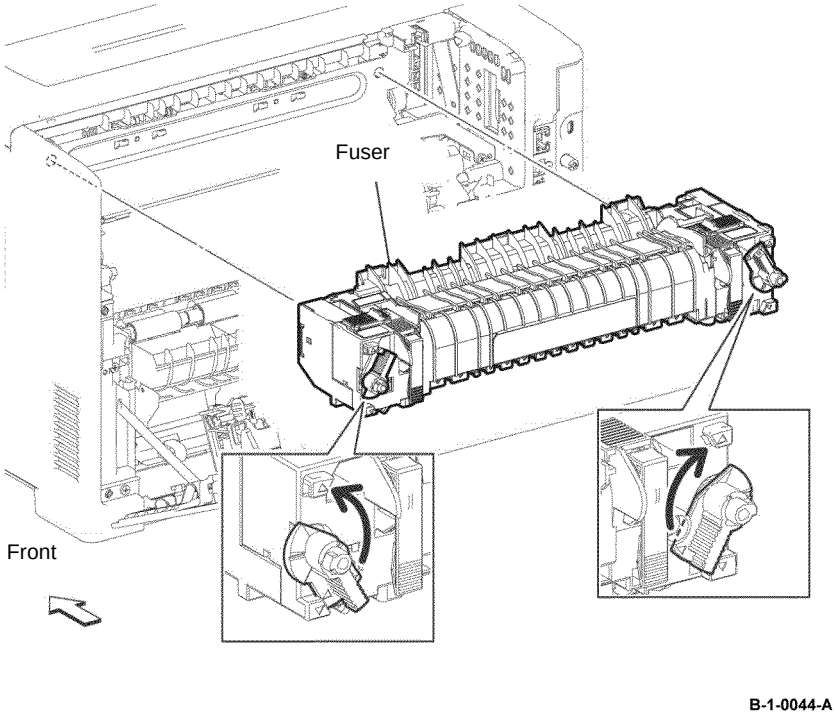

Figure 1 Fuser removal

Replacement

1. The replacement is the reverse of the removal procedure.
2. If a new fuser is installed, enter dC135 HFSI Counter. Reset the HFSI counters that follow:
   - 950-800.
   - 950-804.

REP 8.1 Drum Cartridge B405

Parts List on PL 8.1

Removal

WARNING

Switch off the electricity to the machine, GP 10. Disconnect the power cord from the customer supply while performing tasks that do not need electricity. Electricity can cause death or injury. Moving parts can cause injury.

CAUTION

Take care not to touch the xerographic drum and protect it from dirt and dust.

1. Open the front cover assembly, PL 19.1B Item 98.
2. Unlock and remove the toner cartridge, PL 8.1 Item 2.
3. Remove the drum cartridge, Figure 1.

   NOTE: *Note that the drum cartridge is locked while the right front link, PL 4.1B Item 3, and left front link, PL 4.1B Item 4, are pressed.*

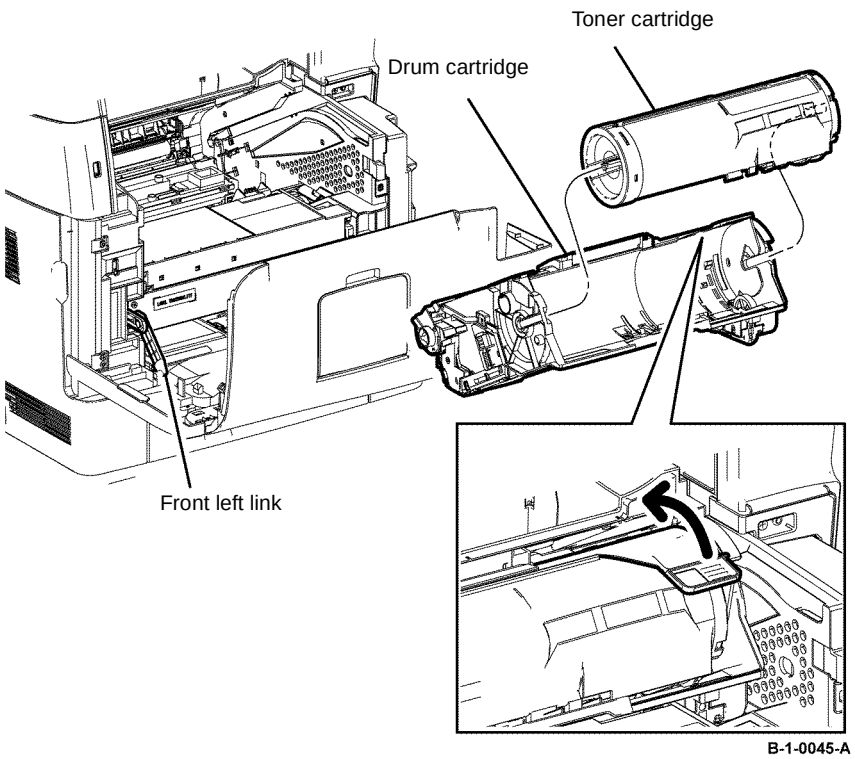

Figure 1 Drum cartridge removal

Replacement

The replacement is the reverse of the removal procedure.

REP 8.2 Drum Cartridge B400

Parts List on PL 8.1

Removal

WARNING

Switch off the electricity to the machine, GP 10. Disconnect the power cord from the customer supply while performing tasks that do not need electricity. Electricity can cause death or injury. Moving parts can cause injury.

CAUTION

Take care not to touch the xerographic drum and protect it from dirt and dust.

1. Open the front cover assembly, PL 19.1A Item 98.
2. Unlock and remove the toner cartridge, PL 8.1 Item 2.
3. Remove the drum cartridge, Figure 1.

   NOTE: *Note that the drum cartridge is locked while the front right link, PL 4.1A Item 3, and front left link, PL 4.1A Item 4, are pressed.*

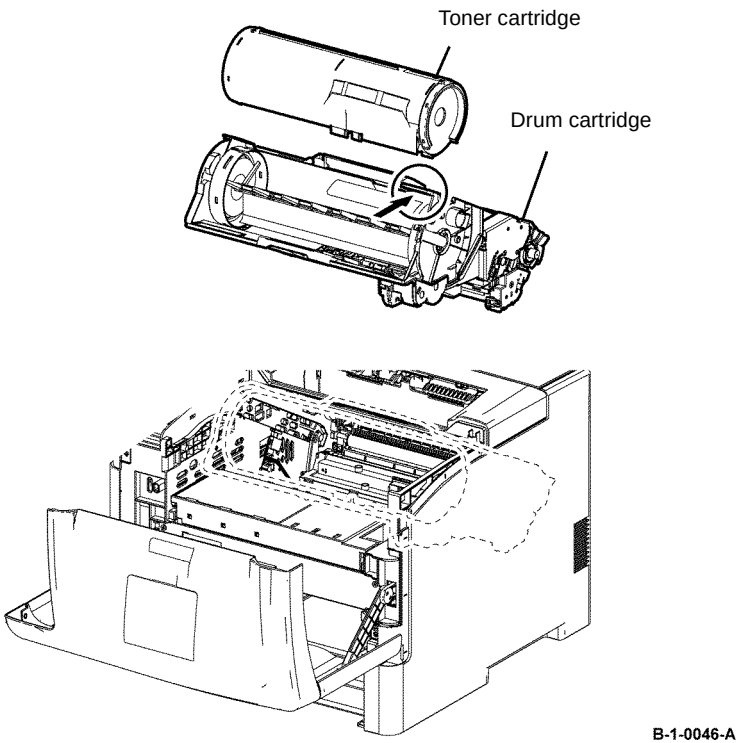

Figure 1 Drum cartridge removal

Replacement

The replacement is the reverse of the removal procedure.

REP 9.1 Retard Holder Assembly B405

Parts List on PL 9.2

Removal

WARNING

Switch off the electricity to the machine, GP 10. Disconnect the power cord from the customer supply while performing tasks that do not need electricity. Electricity can cause death or injury. Moving parts can cause injury.

1. Remove the option tray assembly, PL 9.2 Item 1.
2. Release the hook that fixes the option tray retard holder assembly, then rotate the option tray retard holder assembly in the arrowed direction, Figure 1.
3. Release the two bosses on the retard holder assembly, and then remove the retard roll holder assembly, Figure 1.

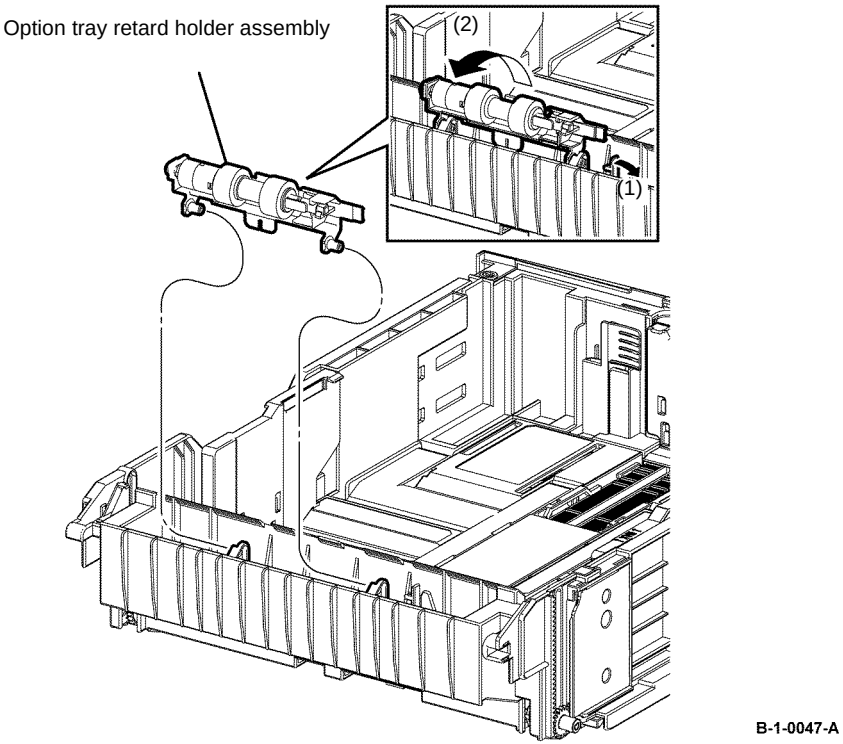

Figure 1 Retard roll holder assembly removal

Replacement

The replacement is the reverse of the removal procedure.

REP 9.2 Retard Holder Assembly B400

Parts List on PL 9.2

Removal

WARNING

Switch off the electricity to the machine, GP 10. Disconnect the power cord from the customer supply while performing tasks that do not need electricity. Electricity can cause death or injury. Moving parts can cause injury.

1. Remove the option tray assembly, PL 9.2 Item 1.
2. Release the hook that fixes the option tray retard holder assembly to the 550 tray assembly, rotate the option tray retard holder assembly, along the axis, then remove the retard holder assembly by moving it in the arrowed direction, Figure 1.

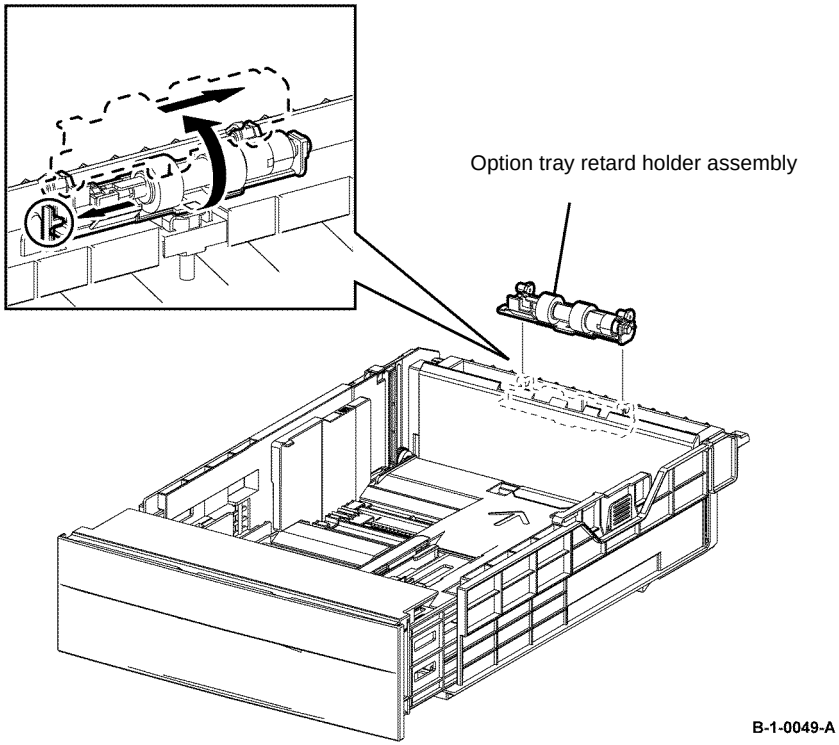

Figure 1 Retard roll holder assembly removal

Replacement

The replacement is the reverse of the removal procedure.

REP 9.3 Feed Roll Assembly B405

Parts List on PL 9.2

Removal

WARNING

Switch off the electricity to the machine, GP 10. Disconnect the power cord from the customer supply while performing tasks that do not need electricity. Electricity can cause death or injury. Moving parts can cause injury.

1. Remove the option tray assembly, PL 9.2 Item 1.
2. Remove the retard holder assembly, REP 9.1.
3. Release the hook fixing the option tray retard shaft, then remove the option tray retard shaft, together with the feed roll assembly by pulling it out sideways, Figure 1.

   NOTE: *Handle the hook of the option tray retard holder carefully to avoid breakage.*

4. Pull out the feed roll assembly while releasing the hook fixing it, Figure 1.

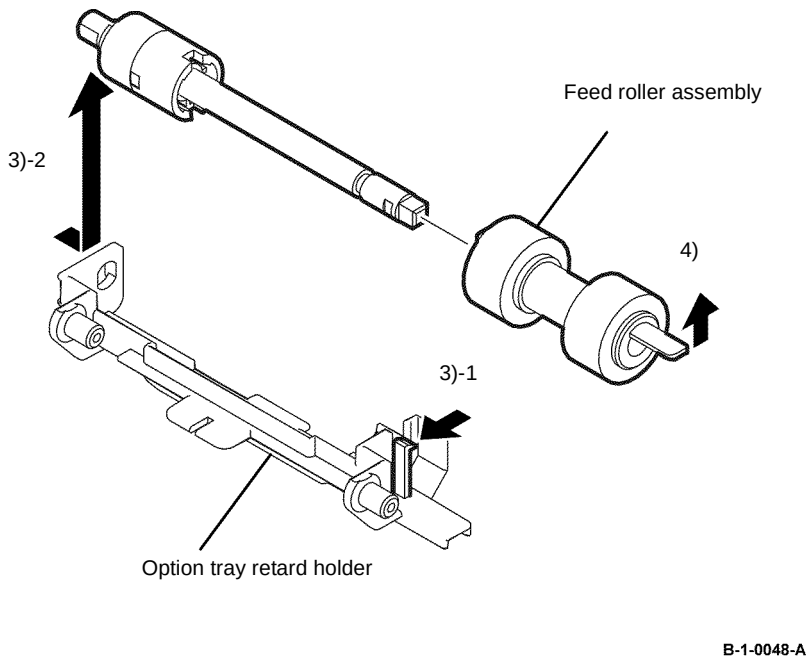

Figure 1 Feed roll assembly removal

Replacement

The replacement is the reverse of the removal procedure.

REP 9.4 Feed Roll Assembly B400

Parts List on PL 9.2

Removal

WARNING

Switch off the electricity to the machine, GP 10. Disconnect the power cord from the customer supply while performing tasks that do not need electricity. Electricity can cause death or injury. Moving parts can cause injury.

1. Remove the option tray assembly, PL 9.2 Item 1.
2. Remove the retard holder assembly, REP 9.2.
3. Release the hook fixing the option tray retard shaft, then remove the option tray retard shaft, together with the feed roll assembly by pulling it out sideways, Figure 1.

   NOTE: *Handle the hook of the option tray retard holder carefully to avoid breakage.*

4. Pull out the feed roll assembly while releasing the hook fixing it, Figure 1.

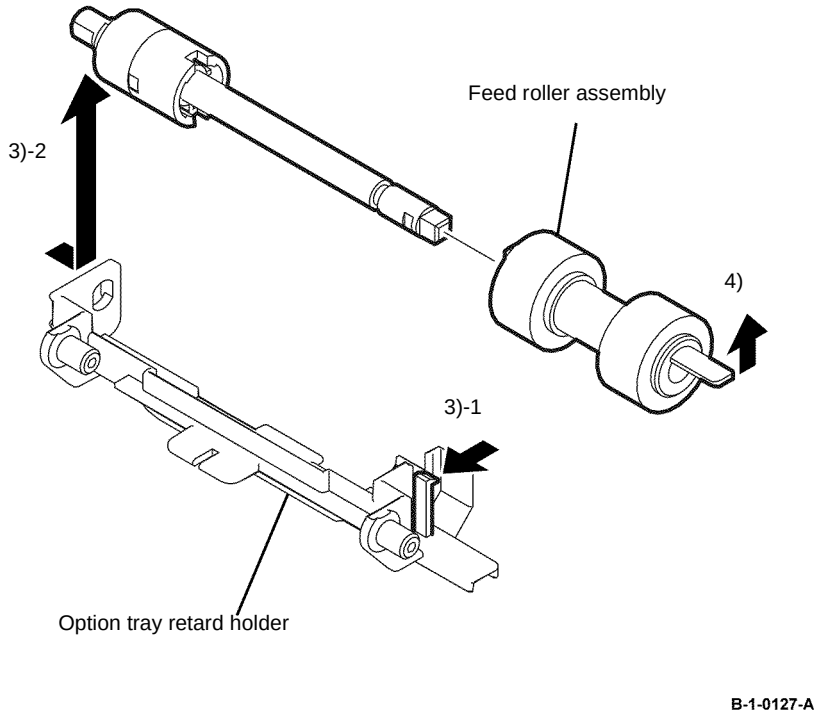

Figure 1 Feed roll assembly removal

Replacement

The replacement is the reverse of the removal procedure.

REP 9.5 Tray 1 Lock Spring

Parts List on PL 9.2

Removal

WARNING

Switch off the electricity to the machine, GP 10. Disconnect the power cord from the customer supply while performing tasks that do not need electricity. Electricity can cause death or injury. Moving parts can cause injury.

1. Remove tray 1 from the machine, PL 9.2 Item 1.
2. Remove the bottom lock cover, Figure 1:
   a. Stand the option feeder tray on its side with the bottom lock cover face up (1).
   b. Carefully pry the bottom lock cover at two points (2) releasing two tabs in the option feeder tray, then remove the bottom lock cover (1).

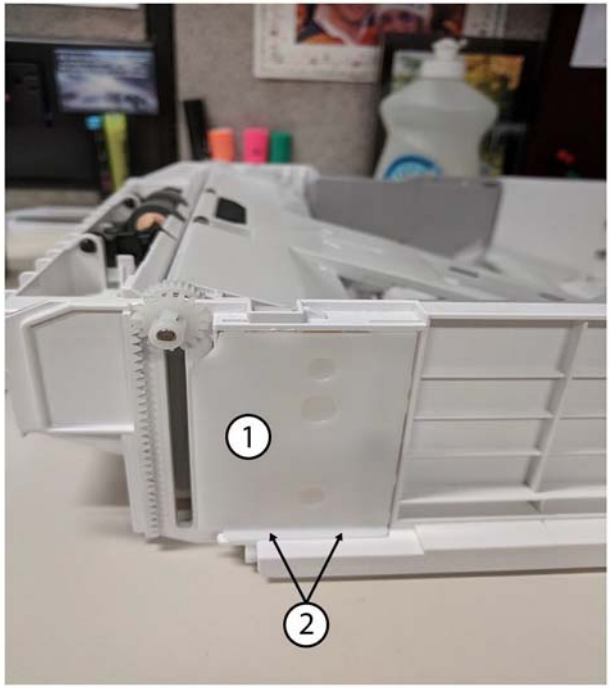

B-1-0277-A

Figure 1 Bottom lock cover removal

3. Remove the lock spring (1), Figure 2.

   NOTE: *To ensure the gears do not fall out of the lift assembly (2), hold the lift assembly in-place while removing the lock spring.*

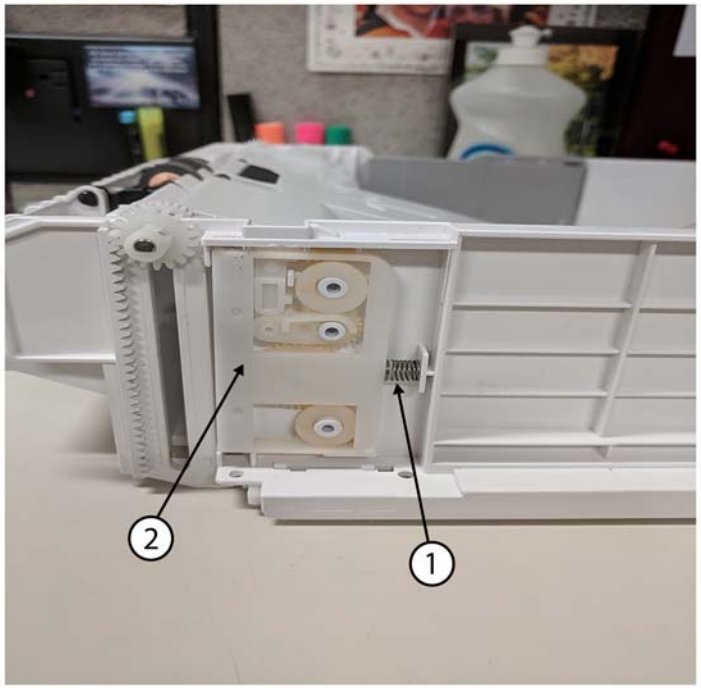

B-1-0278-A

Figure 2 Lock spring removal

4. Verify lift operation by manually lifting the tray lift mechanism.

Replacement

The replacement is the reverse of the removal procedure.

If the assembly comes apart during removal, re-assemble the assembly as shown below to ensure the lift dampening of the assembly function's properly, Figure 3.

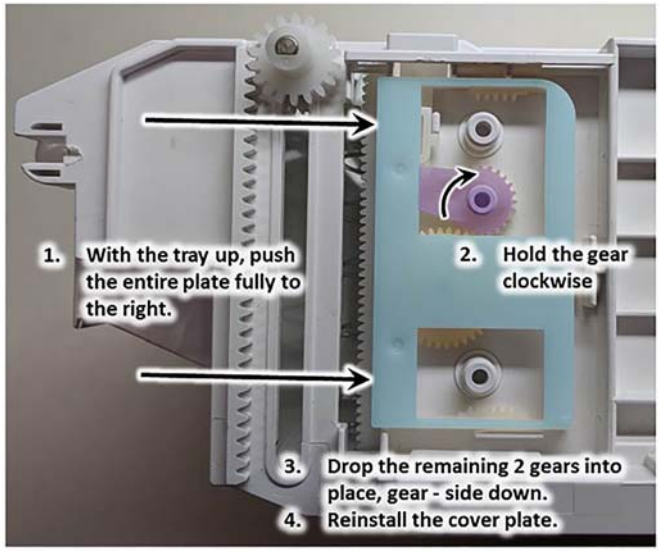

B-1-0280-A

Figure 3 Option feeder tray lift reassembly

REP 11.1 Option Feeder Assembly B405

Parts List on PL 11.1B

Removal

WARNING

Mandatory safety warning. This procedure must be performed by two people. The module is heavy.

WARNING

Switch off the electricity to the machine, GP 10. Disconnect the power cord from the customer supply while performing tasks that do not need electricity. Electricity can cause death or injury. Moving parts can cause injury.

1. Open the MSI cover, PL 13.2 Item 99.
2. Pull out the MSI tray assembly, PL 13.2 Item 9.
3. Remove the option tray assembly, PL 9.2 Item 1.
4. Release the two lock screws fixing the option feeder assembly, Figure 1.

WARNING

Use safe handling procedures, GP 11. The module is heavy.

NOTE: *The printer weight is 22kg (49lb)*

5. Release the five bosses on the option feeder assembly from the holes on the IOT, then lift the IOT upward from the option feeder assembly, Figure 1.

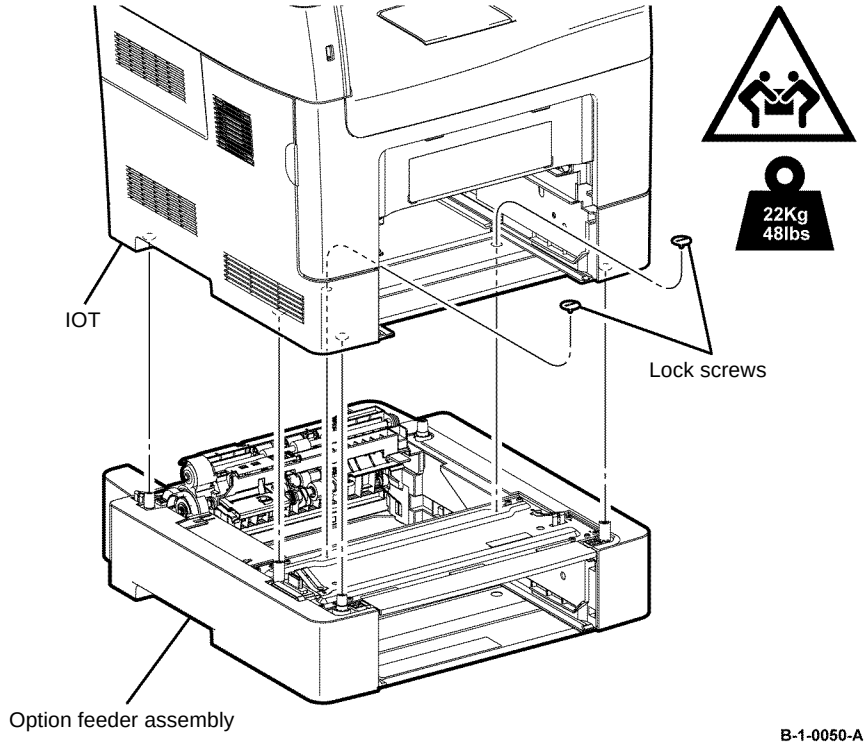

Figure 1 Option feeder assembly removal

Replacement

The replacement is the reverse of the removal procedure.

REP 11.2 Option Feeder Assembly B400

Parts List on PL 11.1A

Removal

WARNING

Switch off the electricity to the machine, GP 10. Disconnect the power cord from the customer supply while performing tasks that do not need electricity. Electricity can cause death or injury. Moving parts can cause injury.

1. Open the MSI cover, PL 13.2 Item 99.
2. Pull out the MSI tray assembly, PL 13.2 Item 9.
3. Remove the option tray assembly, PL 9.2 Item 1.
4. Release the two lock screws fixing the option feeder assembly, Figure 1.
5. Release the five bosses on the option feeder assembly from the holes on the IOT, then lift the IOT upward from the option feeder assembly, Figure 1.

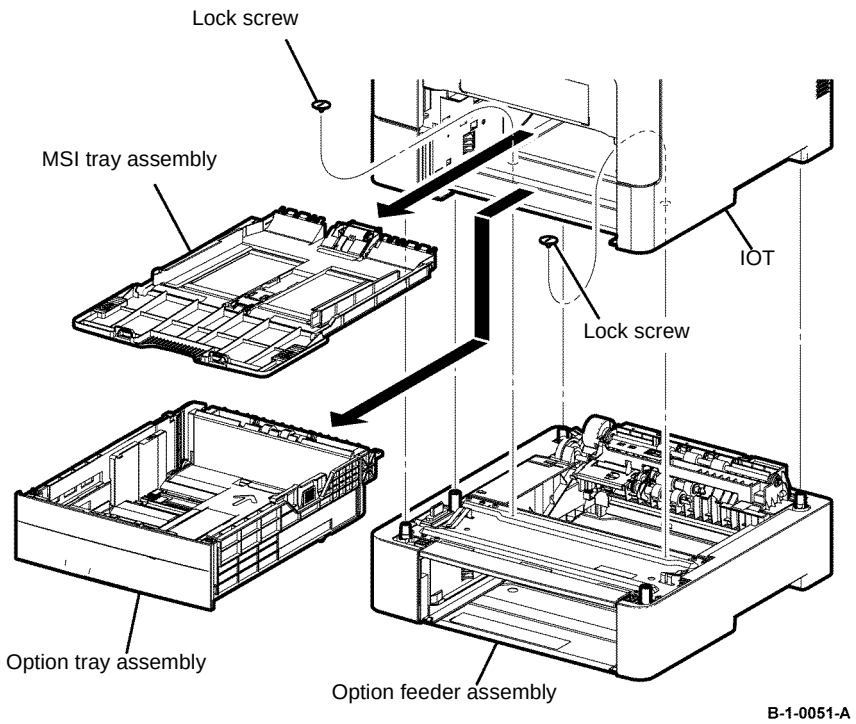

Figure 1 Option feeder assembly removal

Replacement

The replacement is the reverse of the removal procedure.

REP 11.3 Option Feeder Left Cover B405

Parts List on PL 11.1B

Removal

WARNING

Switch off the electricity to the machine, GP 10. Disconnect the power cord from the customer supply while performing tasks that do not need electricity. Electricity can cause death or injury. Moving parts can cause injury.

1. Remove the option tray assembly, PL 9.2 Item 1 from the printer.
2. Remove the option feeder assembly, REP 11.1.
3. Remove the one screw (silver, tapping, 8mm) that fixes the option feeder left cover, release the two hooks from the bosses, release the six bosses from the holes, then remove the option feeder left cover, Figure 1.

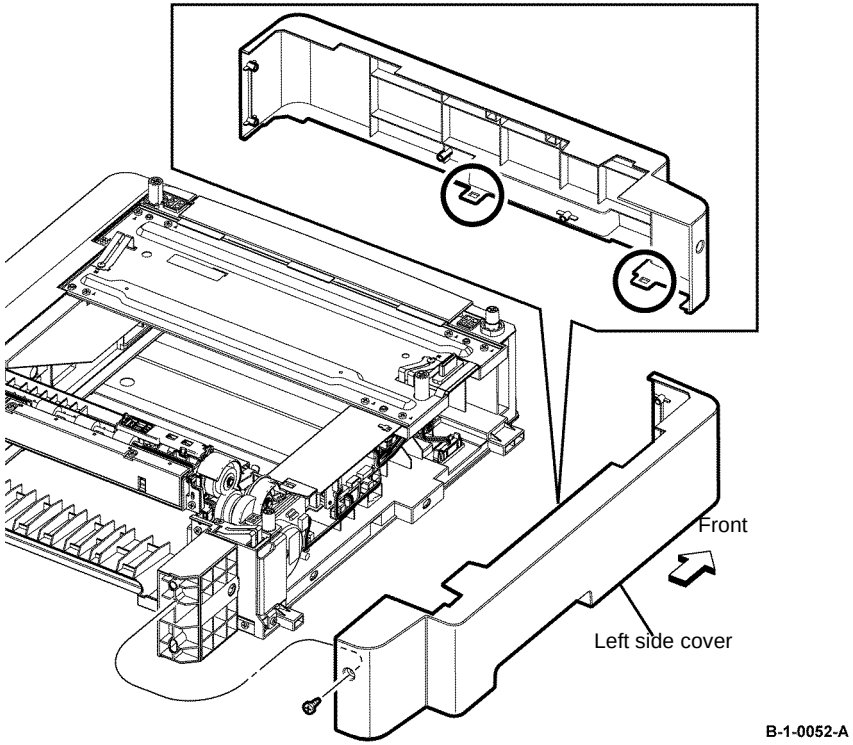

Figure 1 Option feeder left cover removal

Replacement

The replacement is the reverse of the removal procedure.

REP 11.4 Option Feeder Left Cover B400

Parts List on PL 11.1A

Removal

WARNING

Switch off the electricity to the machine, GP 10. Disconnect the power cord from the customer supply while performing tasks that do not need electricity. Electricity can cause death or injury. Moving parts can cause injury.

1. Remove the option tray assembly, PL 9.2 Item 1.
2. Remove the option feeder assembly, REP 11.2.
3. Remove the one screw (silver, tapping, 8mm) that fixes the option feeder left cover, release the one hook from the boss, release the six bosses from the holes, then remove the option feeder left cover, Figure 1.

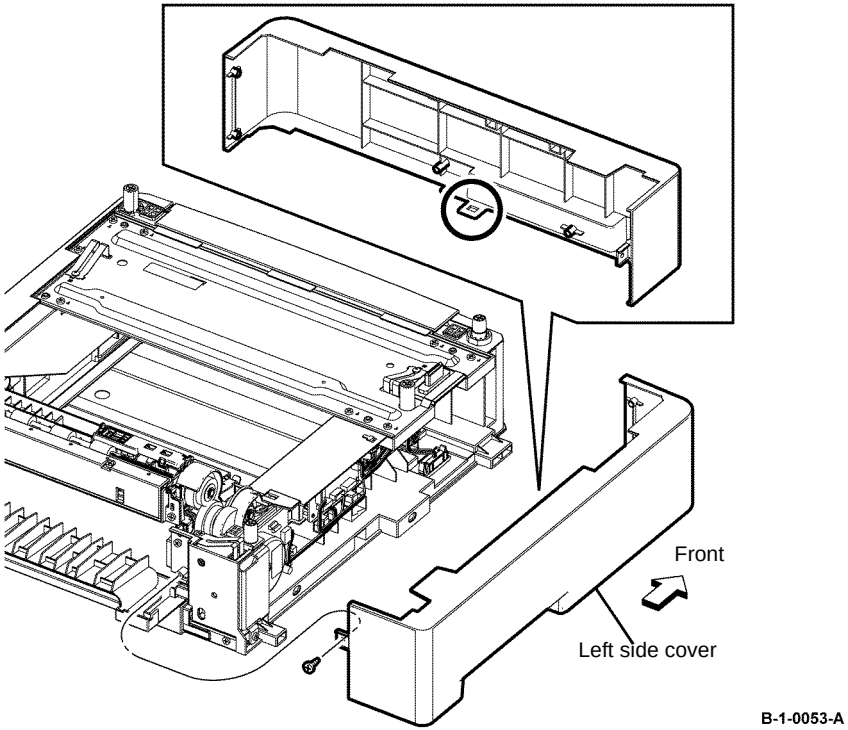

Figure 1 Option feeder left cover removal

Replacement

The replacement is the reverse of the removal procedure.

REP 11.5 Option Feeder PWB Assembly B405

Parts List on PL 11.1B

Removal

WARNING

Switch off the electricity to the machine, GP 10. Disconnect the power cord from the customer supply while performing tasks that do not need electricity. Electricity can cause death or injury. Moving parts can cause injury.

Figure 1 ESD symbol

CAUTION

Observe ESD procedures during this procedure.

1. Remove the option tray assembly, PL 9.2 Item 1.
2. Remove the option feeder assembly, REP 11.1.
3. Remove the option feeder left cover, REP 11.3.
4. Release the harness from the clamp, then remove the clamp from the frame.
5. Disengage all connectors from the option tray PWB assembly, Figure 2.
6. Remove three screws (silver, tapping, 8mm) that fix the option tray PWB assembly, then remove the option feeder PWB assembly, Figure 2.

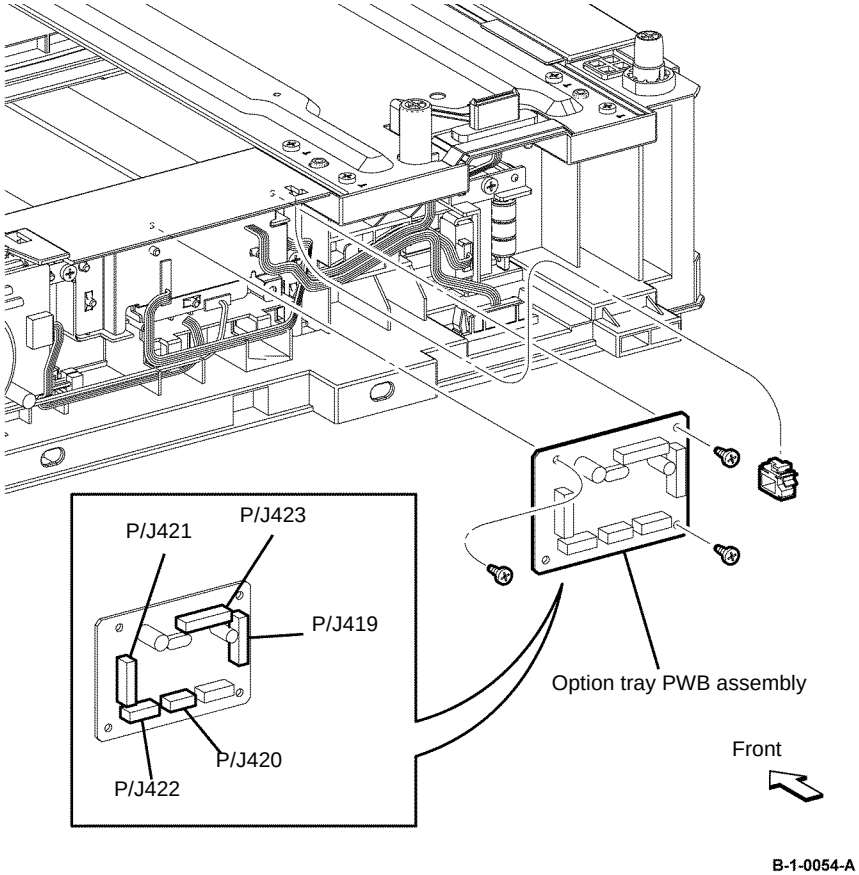

Figure 2 Option feeder PWB assembly removal

Replacement

The replacement is the reverse of the removal procedure.

REP 11.6 Option Feeder PWB Assembly B400

Parts List on PL 11.1A

Removal

WARNING

Switch off the electricity to the machine, GP 10. Disconnect the power cord from the customer supply while performing tasks that do not need electricity. Electricity can cause death or injury. Moving parts can cause injury.

Figure 1 ESD symbol

CAUTION

Observe ESD procedures during this procedure.

1. Remove the option tray assembly, PL 9.2 Item 1.
2. Remove the option feeder assembly, REP 11.2.
3. Remove the option feeder left cover, REP 11.4.
4. Release the harness from the clamp, then remove the clamp from the frame.

5. Disengage all connectors from the option tray PWB assembly, Figure 2.
6. Remove three screws (silver, tapping, 8mm) that fix the option tray PWB assembly, then remove the option feeder PWB assembly, Figure 2.

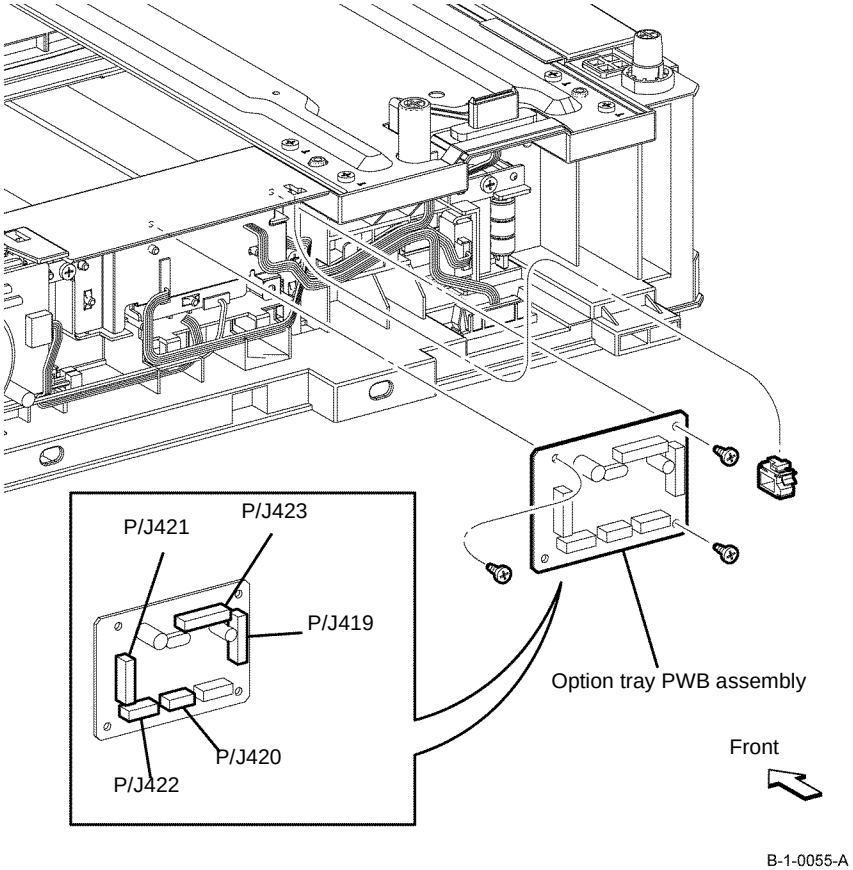

Figure 2 Option feeder PWB assembly removal

Replacement

The replacement is the reverse of the removal procedure.

REP 11.7 Option Feeder Right Cover B405

Parts List on PL 11.1B

Removal

WARNING

Switch off the electricity to the machine, GP 10. Disconnect the power cord from the customer supply while performing tasks that do not need electricity. Electricity can cause death or injury. Moving parts can cause injury.

Figure 1 ESD symbol

CAUTION

Observe ESD procedures during this procedure.

1. Remove the option tray assembly, PL 9.2 Item 1.
2. Remove the option feeder assembly, REP 11.1.
3. Remove one screw (silver, tapping, 8mm) that fixes the option feeder right cover, release the two hooks from the bosses, release the six bosses from the holes, then remove the option feeder right cover, Figure 2.

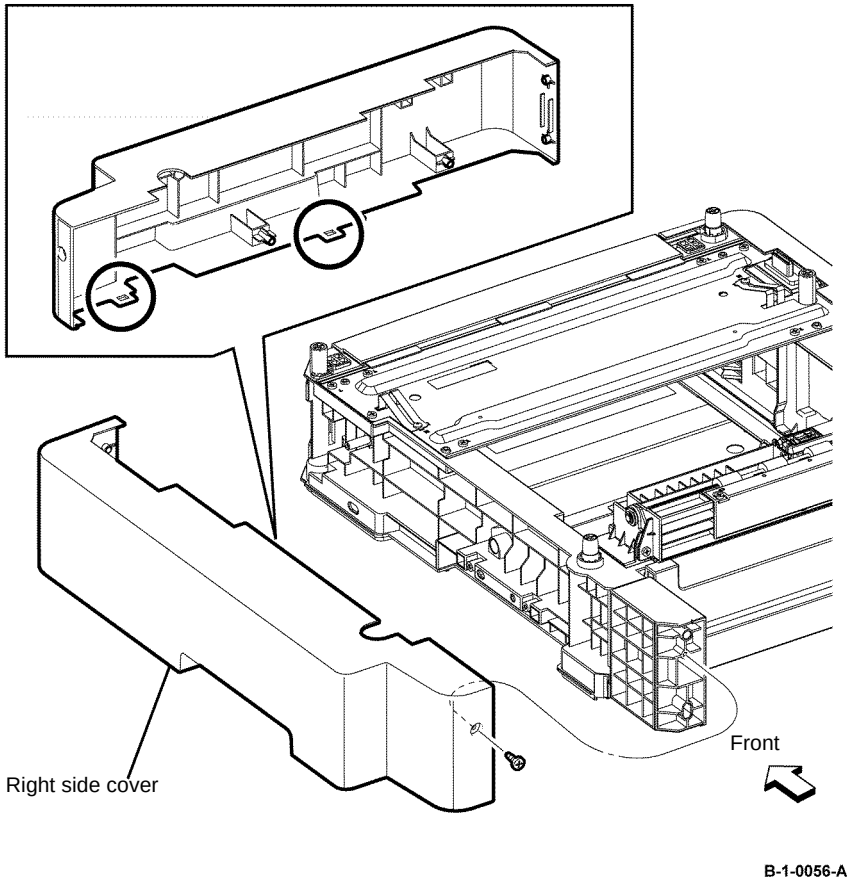

Figure 2 Option feeder right cover removal

Replacement

The replacement is the reverse of the removal procedure.

REP 11.8 Option Feeder Right Cover B400

Parts List on PL 11.1A

Removal

WARNING

Switch off the electricity to the machine, GP 10. Disconnect the power cord from the customer supply while performing tasks that do not need electricity. Electricity can cause death or injury. Moving parts can cause injury.

1. Remove the option tray assembly, PL 9.2 Item 1.
2. Remove the option feeder assembly, REP 11.2.
3. Remove one screw (silver, tapping, 8mm) that fixes the option feeder right cover, release the two hooks from the bosses, release the six bosses from the holes, then remove the option feeder right cover, Figure 1.

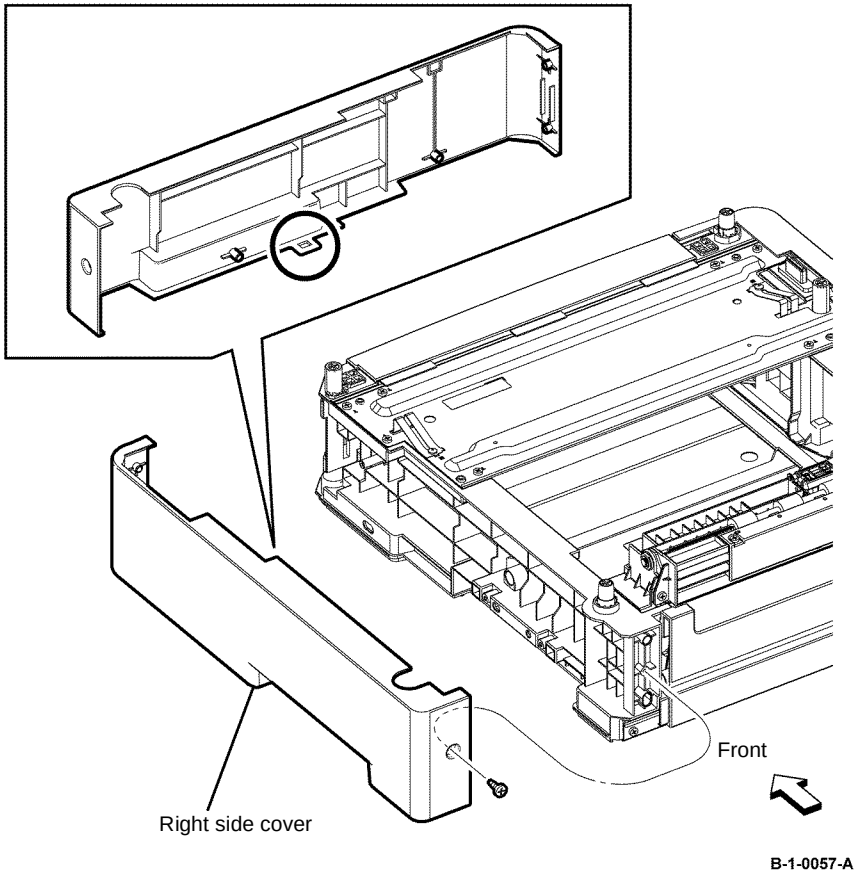

Figure 1 Option feeder right cover removal

Replacement

The replacement is the reverse of the removal procedure.

REP 11.9 Option Feeder Rear Cover B405

Parts List on PL 11.1B

Removal

WARNING

Switch off the electricity to the machine, GP 10. Disconnect the power cord from the customer supply while performing tasks that do not need electricity. Electricity can cause death or injury. Moving parts can cause injury.

1. Remove the tray assembly, PL 9.2 Item 1.
2. Remove the option feeder assembly, REP 11.1.
3. Remove one side of the rear cover spring from the option feeder rear cover, Figure 1.
4. Remove the left boss from the hole, then remove the option feeder rear cover, Figure 1.

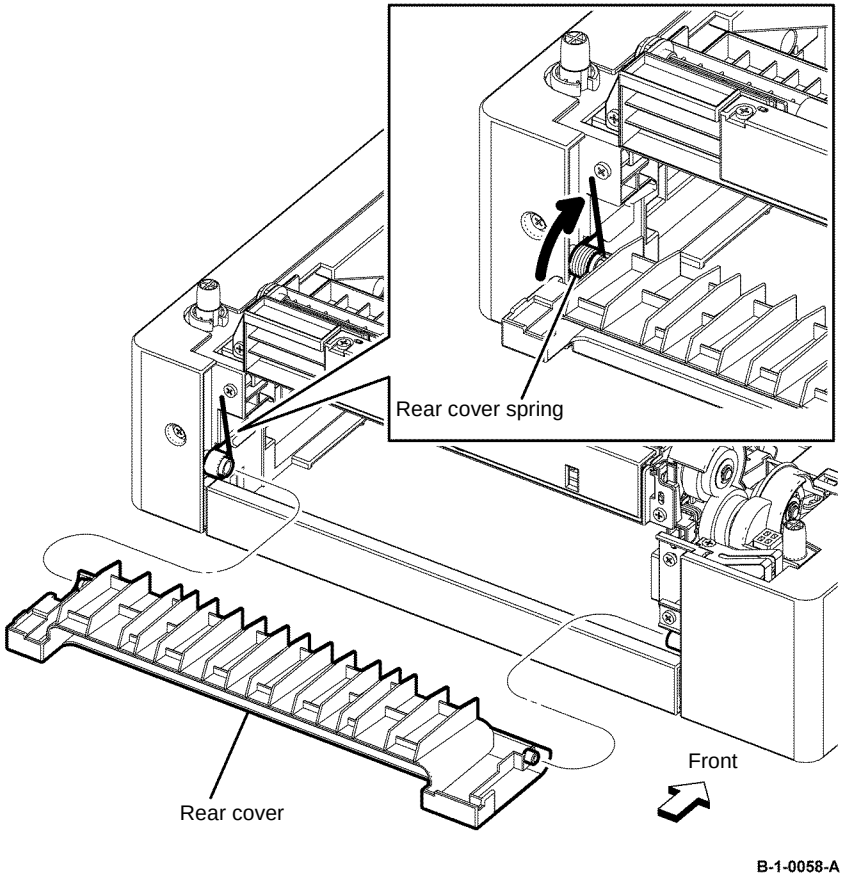

Figure 1 Option feeder 550 rear cover removal

Replacement

The replacement is the reverse of the removal procedure.

REP 11.10 Option Feeder Rear Cover B400

Parts List on PL 11.1A

Removal

WARNING

Switch off the electricity to the machine, GP 10. Disconnect the power cord from the customer supply while performing tasks that do not need electricity. Electricity can cause death or injury. Moving parts can cause injury.

1. Remove the option tray assembly, PL 9.2 Item 1.
2. Remove the option feeder assembly, REP 11.2.
3. Remove one side of the rear cover spring from the option feeder rear cover, Figure 1.
4. Remove the left boss from the hole, then remove the option feeder rear cover, Figure 1.

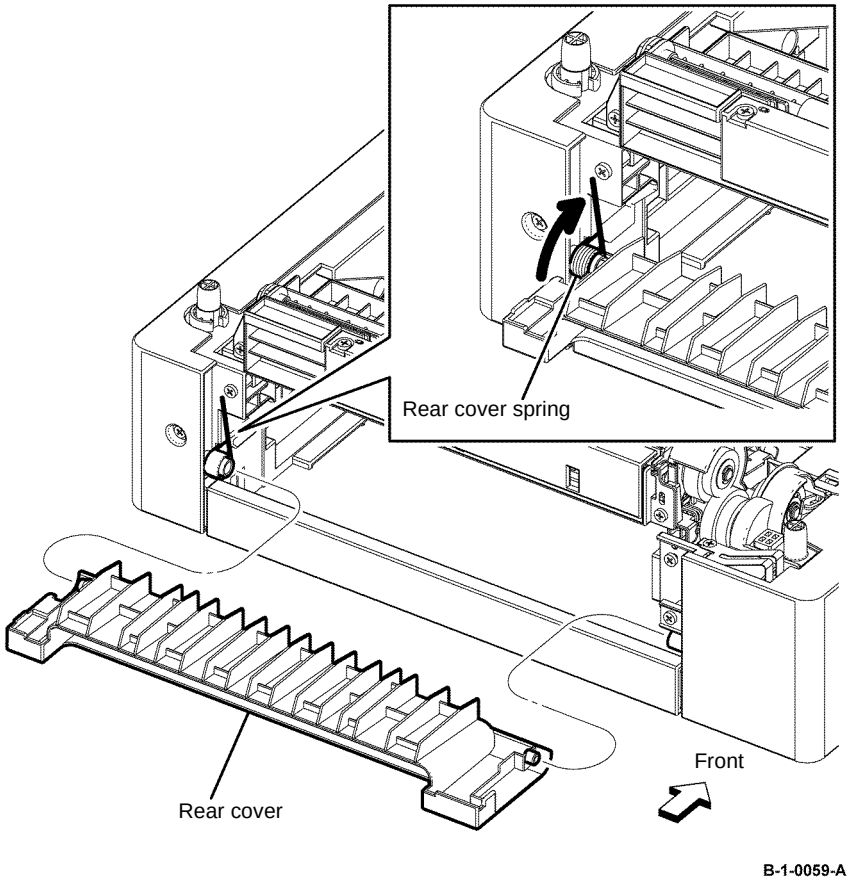

Figure 1 Option feeder rear cover removal

Replacement

The replacement is the reverse of the removal procedure.

REP 11.11 Option Feeder Motor Assembly B405

Parts List on PL 11.1B

Removal

WARNING

Switch off the electricity to the machine, GP 10. Disconnect the power cord from the customer supply while performing tasks that do not need electricity. Electricity can cause death or injury. Moving parts can cause injury.

WARNING

Take care during this procedure. Sharp edges may be present that can cause injury.

1. Remove the option tray assembly, PL 9.2 Item 1.
2. Remove the option feeder assembly, REP 11.1.
3. Remove the option feeder left cover, REP 11.3.
4. Remove one screw (silver, tapping, 8mm), then remove the cover by lifting the earth plate, Figure 1.
5. Disconnect PJ4221 from the option feeder motor assembly, Figure 1.
6. Remove four screws (silver, tapping, 8mm) that fix the option feeder drive assembly, then remove the option feeder drive assembly, Figure 1.

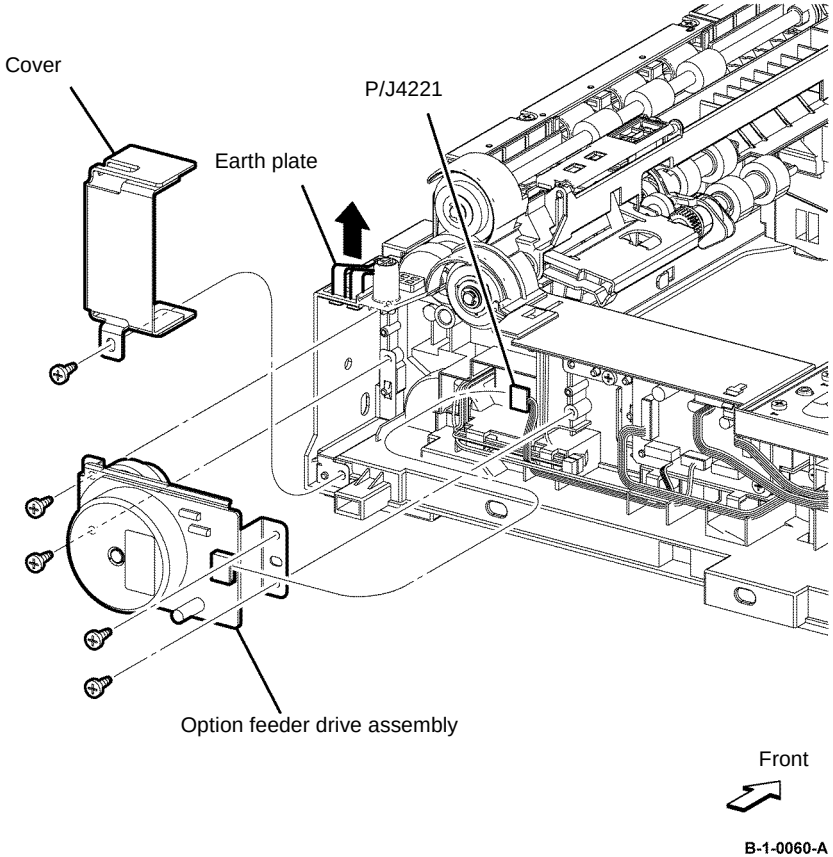

Figure 1 Option feeder drive assembly removal

7. Remove the option feeder gear and three screws (silver, M3, 4mm) that fix the option feeder motor assembly, then remove the option feeder motor assembly from the motor bracket, Figure 2.

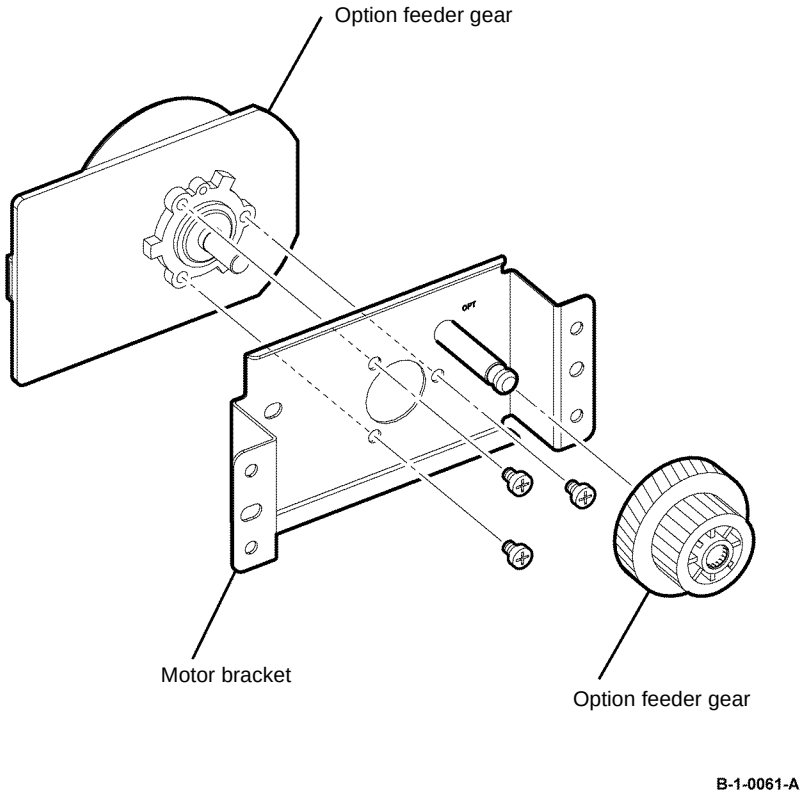

Figure 2 Option feeder motor assembly removal

Replacement

The replacement is the reverse of the removal procedure.

REP 11.12 Option Feeder Motor Assembly B400

Parts List on PL 11.1A

Removal

WARNING

Switch off the electricity to the machine, GP 10. Disconnect the power cord from the customer supply while performing tasks that do not need electricity. Electricity can cause death or injury. Moving parts can cause injury.

WARNING

Take care during this procedure. Sharp edges may be present that can cause injury.

1. Remove the option tray assembly, PL 9.2 Item 1.
2. Remove the option feeder assembly, REP 11.2.
3. Remove the option feeder left cover, REP 11.4.
4. Remove one screw (silver, tapping, 8mm), then remove the cover by lifting the earth plate, Figure 1.
5. Disconnect PJ4221 from the option feeder motor assembly, Figure 1.
6. Remove four screws (silver, tapping, 8mm) that fix the option feeder drive assembly, then remove the option feeder drive assembly, Figure 1.

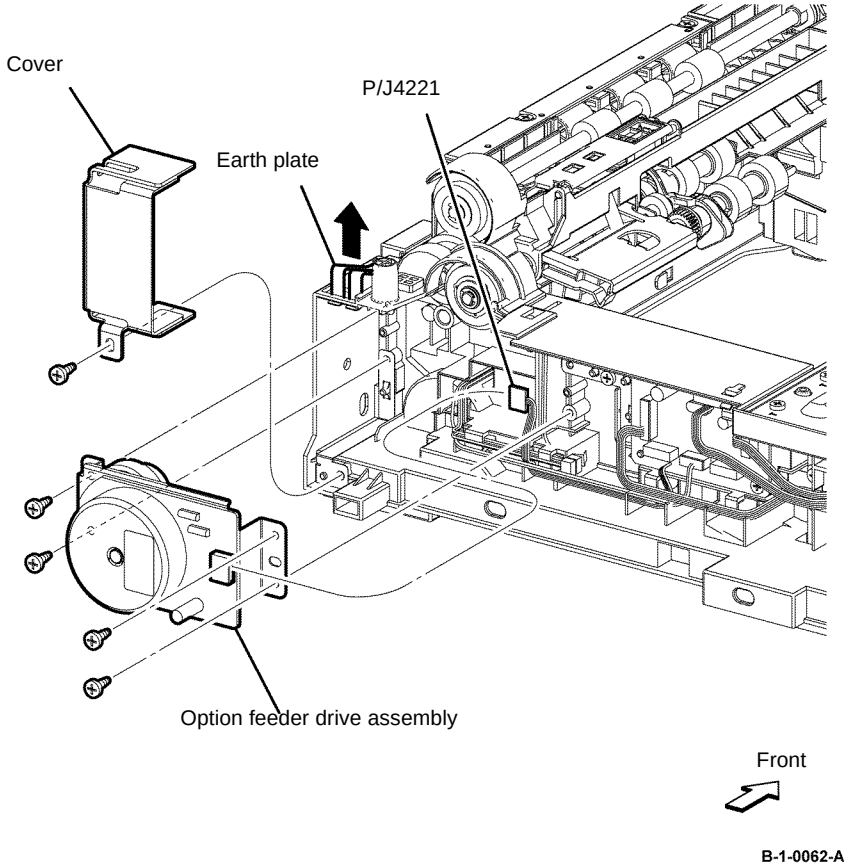

Figure 1 Option feeder drive assembly removal

7. Remove the option feeder gear and three screws (silver, M3, 4mm) that fix the option feeder motor assembly, then remove the option feeder motor assembly from the motor bracket, Figure 2.

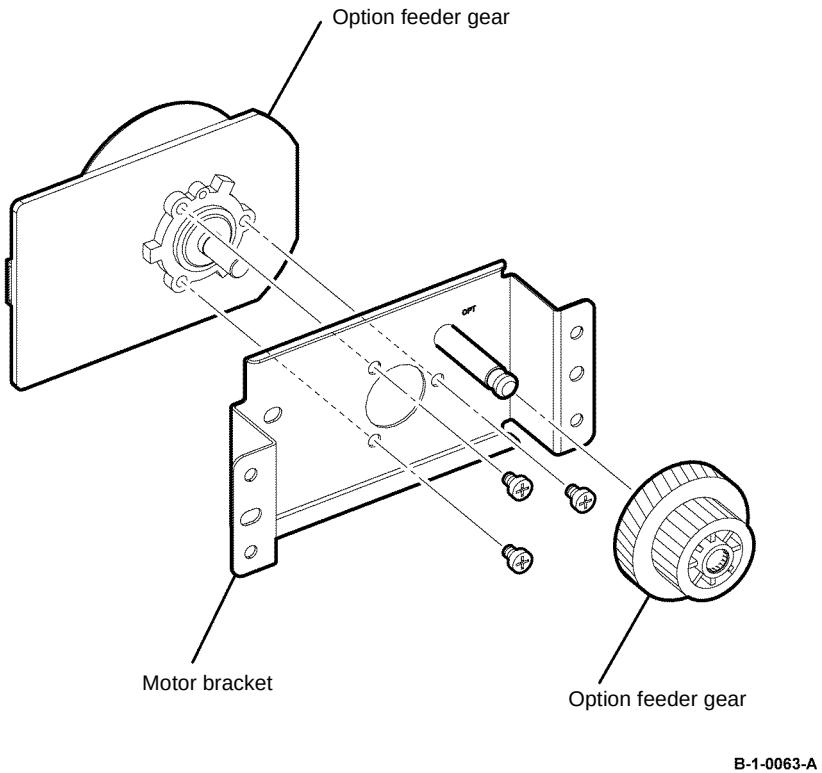

Figure 2 Option feeder motor assembly removal

Replacement

The replacement is the reverse of the removal procedure.

REP 11.13 Option Feeder B405

Parts List on PL 11.1B

Removal

WARNING

Switch off the electricity to the machine, GP 10. Disconnect the power cord from the customer supply while performing tasks that do not need electricity. Electricity can cause death or injury. Moving parts can cause injury.

WARNING

Take care during this procedure. Sharp edges may be present that can cause injury.

1. Remove the option tray assembly, PL 9.2 Item 1.
2. Remove the option feeder assembly, REP 11.1.
3. Remove the option feeder left cover, REP 11.3.
4. Remove the option feeder clutch assembly, REP 11.15.
5. Disconnect PJ4202, PJ4213 and PJ4214 from the option feeder, Figure 1.

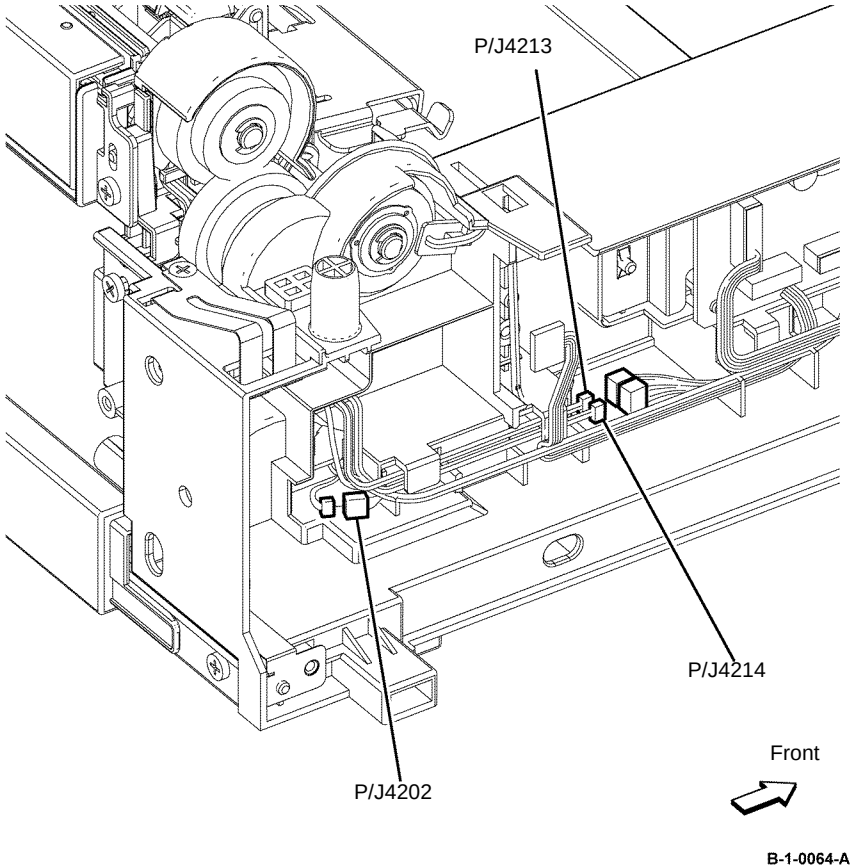

Figure 1 Option feeder relay disconnect

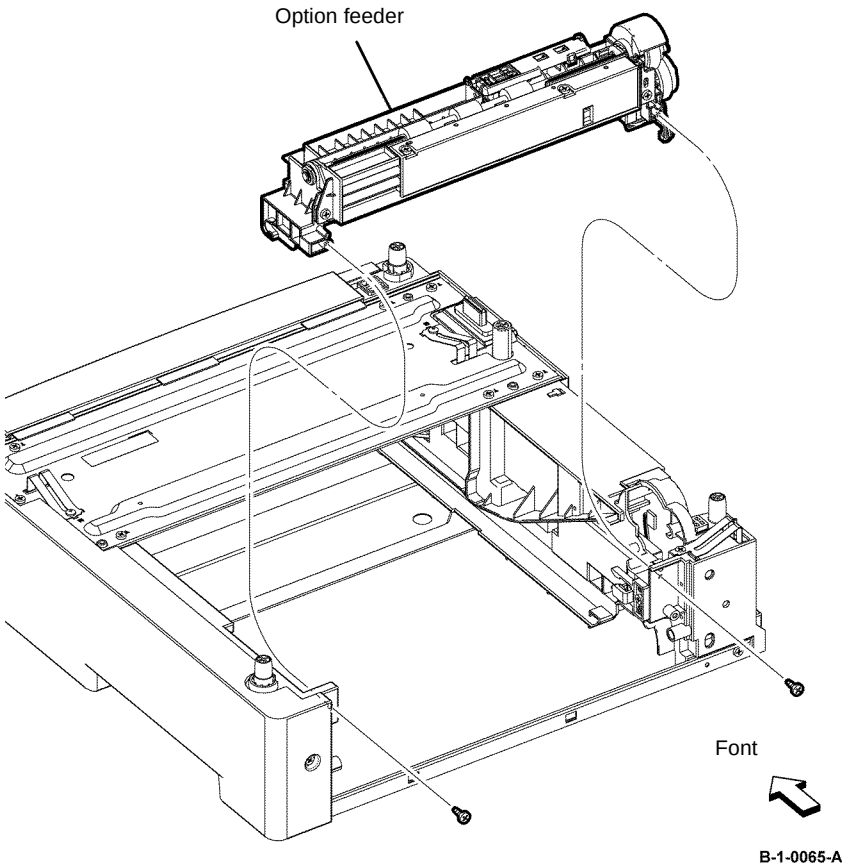

Figure 2 Option feeder removal

6. Release the harness from the harness guide on the frame.
7. Remove two screws (silver, tapping, 8mm) that fix the option feeder, release the four holes from the bosses on the frame, then remove the option feeder, Figure 2.

Replacement

The replacement is the reverse of the removal procedure.

REP 11.14 Option Feeder B400

Parts List on PL 11.1A

Removal

WARNING

Switch off the electricity to the machine, GP 10. Disconnect the power cord from the customer supply while performing tasks that do not need electricity. Electricity can cause death or injury. Moving parts can cause injury.

WARNING

Take care during this procedure. Sharp edges may be present that can cause injury.

1. Remove the option tray assembly, PL 9.2 Item 1.
2. Remove the option feeder assembly, REP 11.2.
3. Remove the option feeder left cover, REP 11.4.
4. Remove the option feeder clutch assembly, REP 11.16.
5. Disconnect PJ4202, PJ4213 and PJ4214 from the option feeder, Figure 1.

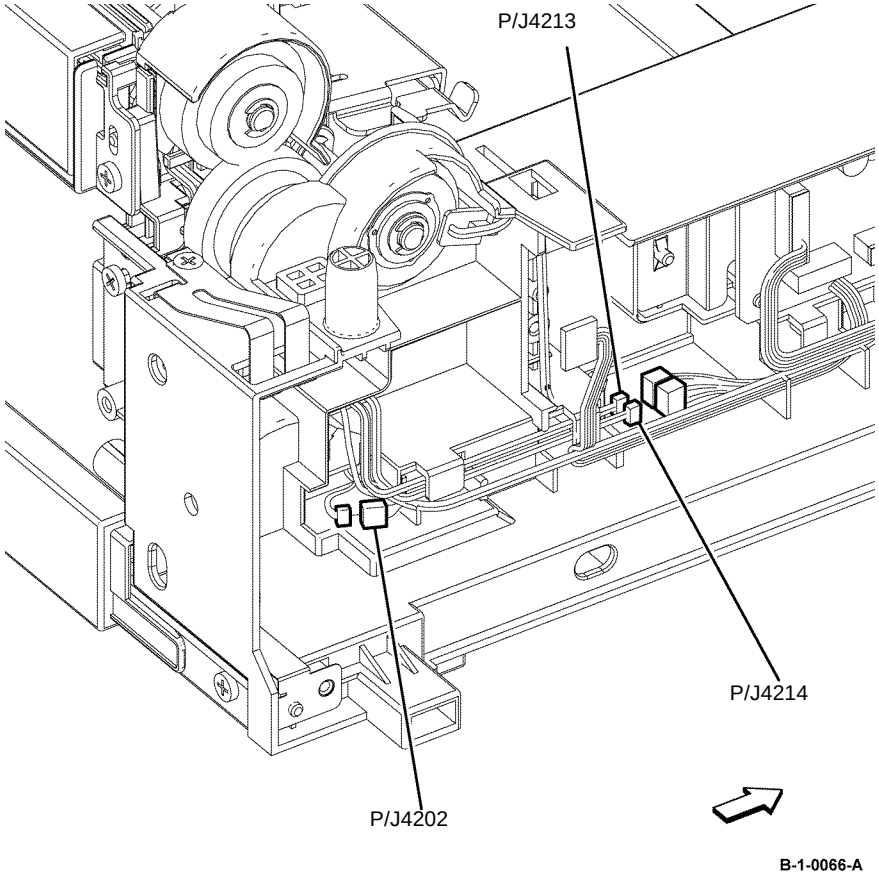

Figure 1 Option feeder relay disconnect

6. Release the harness from the harness guide on the frame.
7. Remove two screws (silver, tapping, 8mm) that fix the option feeder, release the four holes from the bosses on the frame, then remove the option feeder, Figure 2.

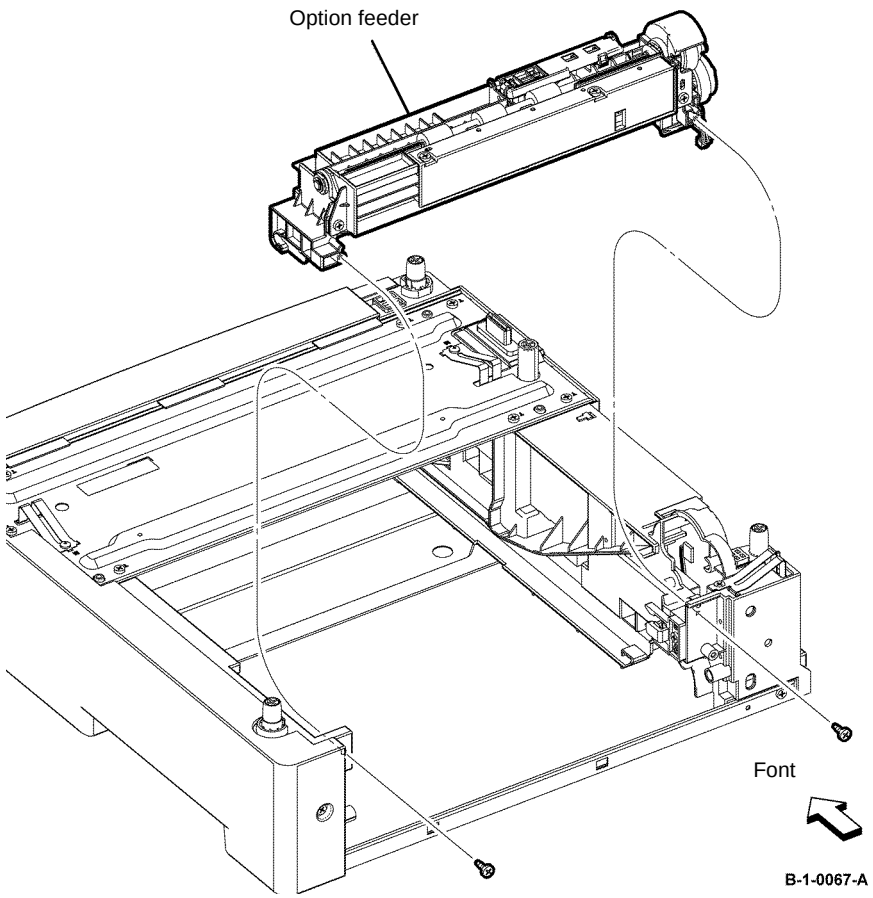

Figure 2 Option feeder removal

Replacement

The replacement is the reverse of the removal procedure.

REP 11.15 Option Feeder Clutch Assembly B405

Parts List on PL 11.1B

Removal

WARNING

Switch off the electricity to the machine, GP 10. Disconnect the power cord from the customer supply while performing tasks that do not need electricity. Electricity can cause death or injury. Moving parts can cause injury.

WARNING

Take care during this procedure. Sharp edges may be present that can cause injury.

1. Remove the option tray assembly, PL 9.2 Item 1.
2. Remove the option feeder assembly, REP 11.1.
3. Remove the option feeder left cover, REP 11.3.
4. Remove the option feeder motor assembly, REP 11.11.

5. Disconnect PJ4201 from the option feeder clutch assembly, then release the harness from the harness guide on the frame, Figure 1.
6. Remove the E-ring that fixes the option feeder clutch assembly, then remove the option feeder clutch assembly, Figure 1.

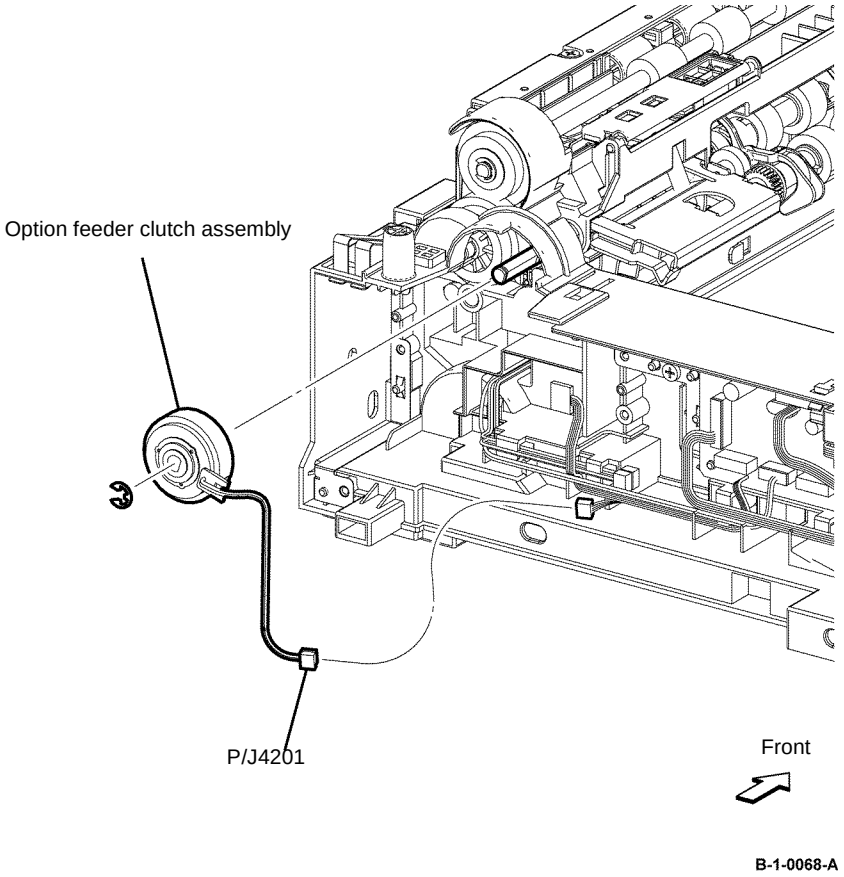

Figure 1 Option feeder clutch assembly removal

Replacement

The replacement is the reverse of the removal procedure.

REP 11.16 Option Feeder Clutch Assembly B400

Parts List on PL 11.1A

Removal

WARNING

Switch off the electricity to the machine, GP 10. Disconnect the power cord from the customer supply while performing tasks that do not need electricity. Electricity can cause death or injury. Moving parts can cause injury.

WARNING

Take care during this procedure. Sharp edges may be present that can cause injury.

1. Remove the option tray assembly, PL 9.2 Item 1.
2. Remove the option feeder assembly, REP 11.2.
3. Remove the option feeder left cover, REP 11.4.
4. Remove the option feeder motor assembly, REP 11.12.

5. Disconnect PJ4201 from the option feeder clutch assembly, then release the harness from the harness guide on the frame, Figure 1.
6. Remove the E-ring that fixes the option feeder clutch assembly, then remove the option feeder clutch assembly, Figure 1.

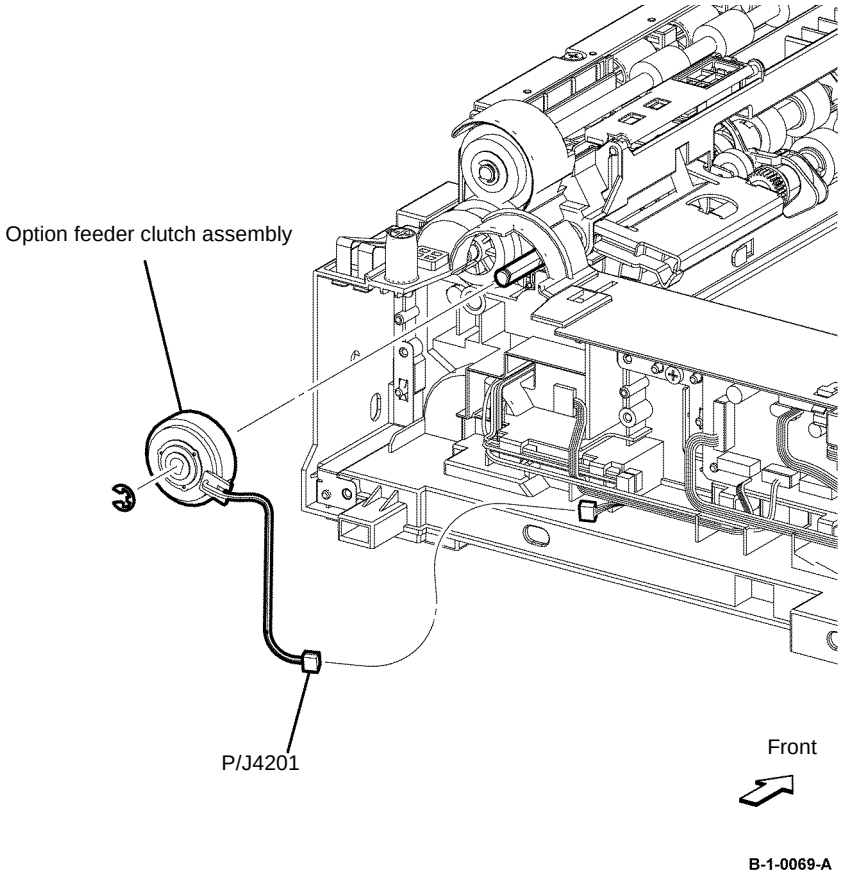

Figure 1 Option feeder clutch assembly removal

Replacement

The replacement is the reverse of the removal procedure.

REP 11.17 Option Feeder Feed Roll Assembly B405

Parts List on PL 11.2

Removal

WARNING

Switch off the electricity to the machine, GP 10. Disconnect the power cord from the customer supply while performing tasks that do not need electricity. Electricity can cause death or injury. Moving parts can cause injury.

1. Remove the option tray assembly, PL 9.2 Item 1.
2. Remove the option feeder assembly, REP 11.1.
3. Remove the hook that fixes the option feeder feed roll assembly, then remove the option feeder feed roll assembly, Figure 1.

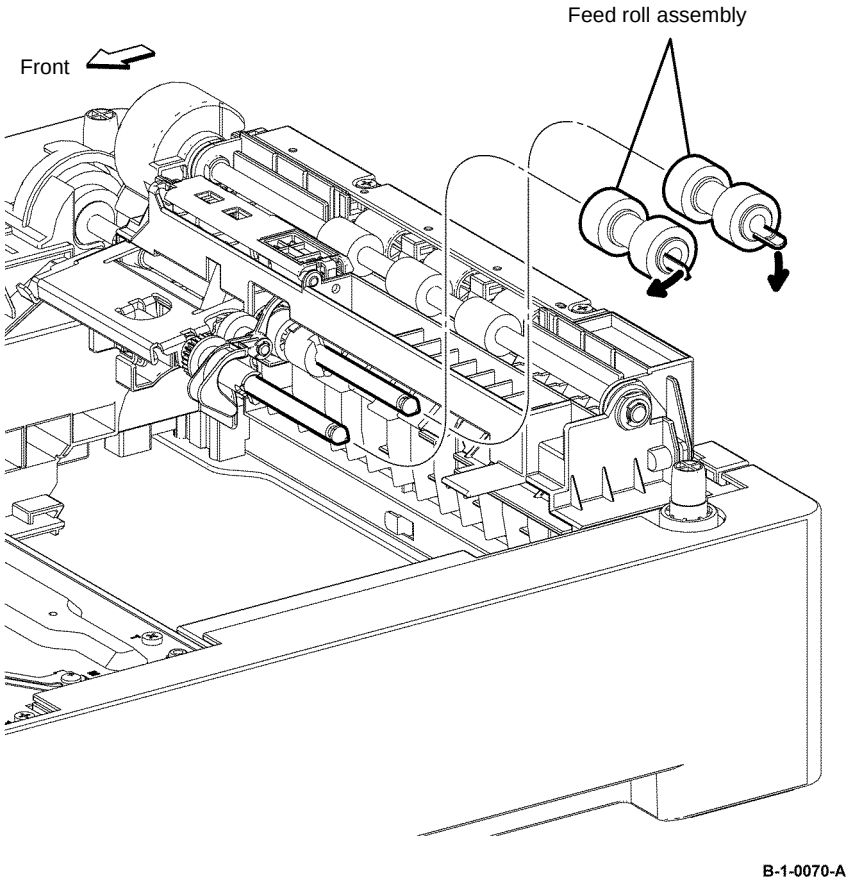

Figure 1 Option feeder feed roll assembly removal

Replacement

The replacement is the reverse of the removal procedure.

REP 11.18 Option Feeder Feed Roll Assembly B400

Parts List on PL 11.2

Removal

WARNING

Switch off the electricity to the machine, GP 10. Disconnect the power cord from the customer supply while performing tasks that do not need electricity. Electricity can cause death or injury. Moving parts can cause injury.

1. Remove the option tray assembly, PL 9.2 Item 1.
2. Remove the option feeder assembly, REP 11.2.
3. Remove the hook that fixes the option feeder feed roll assembly, then remove the option feeder feed roll assembly, Figure 1.

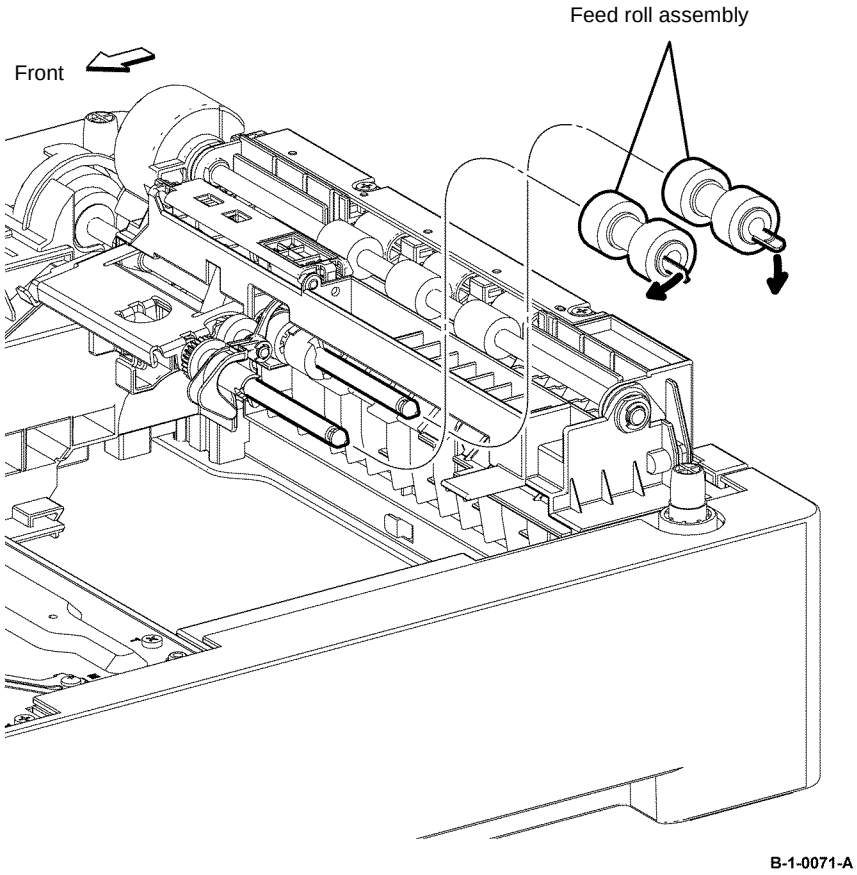

Figure 1 Option feeder feed roll assembly removal

Replacement

The replacement is the reverse of the removal procedure.

REP 11.19 Option Feeder Takeaway Clutch Assembly B405

Parts List on PL 11.2

Removal

WARNING

Switch off the electricity to the machine, GP 10. Disconnect the power cord from the customer supply while performing tasks that do not need electricity. Electricity can cause death or injury. Moving parts can cause injury.

1. Remove the option tray assembly, PL 9.2 Item 1.
2. Remove the option feeder assembly, REP 11.1.
3. Remove the option feeder assembly, REP 11.13.
4. Remove the idler gear and remove one screw (silver, tapping, 8mm) that fixes the nudger spring bracket, then remove the nudger spring bracket, Figure 1.
5. Remove the E-ring, then remove the takeaway clutch assembly, Figure 1.

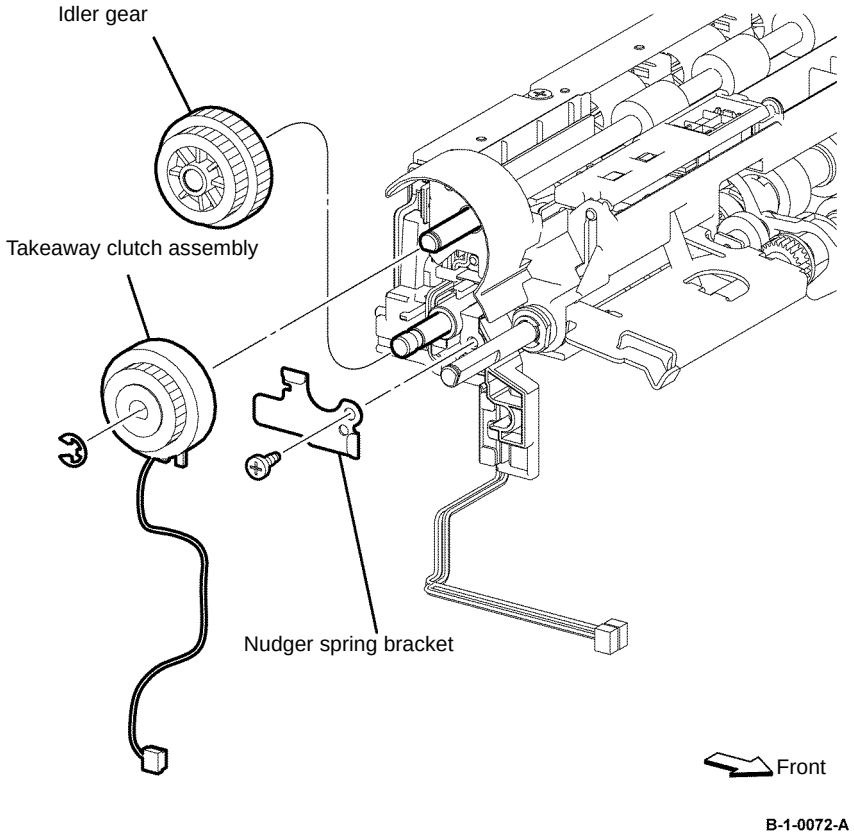

Figure 1 Option feeder takeaway clutch assembly removal

Replacement

The replacement is the reverse of the removal procedure.

REP 11.20 Option Feeder Takeaway Clutch Assembly B400

Parts List on PL 11.2

Removal

WARNING

Switch off the electricity to the machine, GP 10. Disconnect the power cord from the customer supply while performing tasks that do not need electricity. Electricity can cause death or injury. Moving parts can cause injury.

1. Remove the option tray assembly, PL 9.2 Item 1.
2. Remove the option feeder assembly, REP 11.2.
3. Remove the option feeder assembly, REP 11.14.
4. Remove the idler gear and remove one screw (silver, tapping, 8mm) that fixes the nudger spring bracket, then remove the nudger spring bracket, Figure 1.
5. Remove the E-ring, then remove the takeaway clutch assembly, Figure 1.

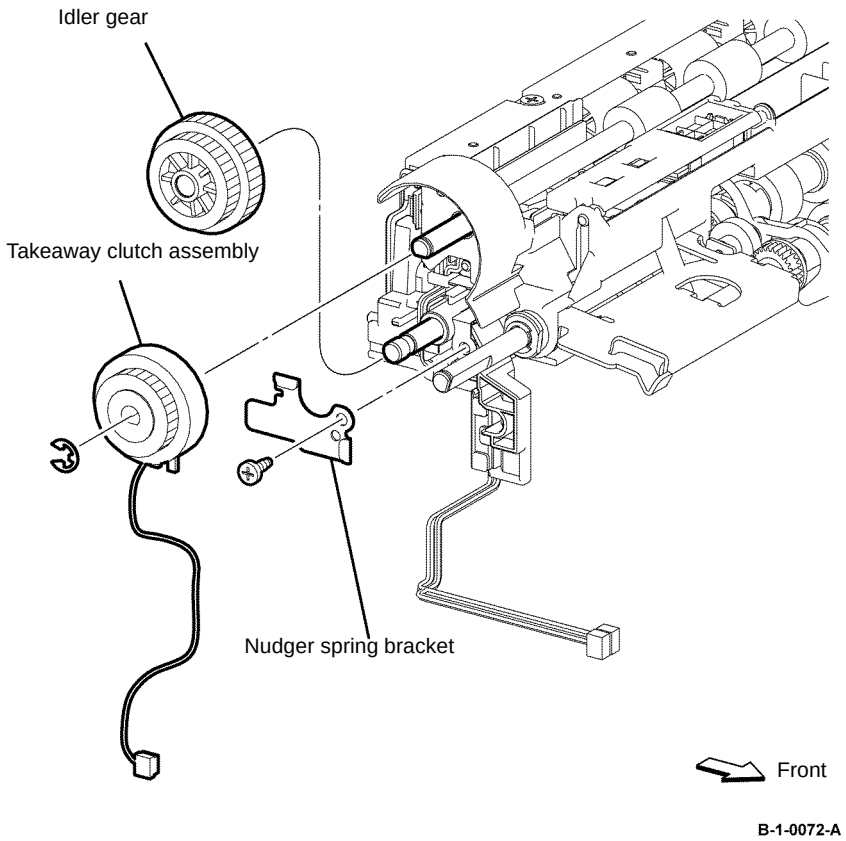

Figure 1 Option Feeder takeaway clutch assembly removal

Replacement

The replacement is the reverse of the removal procedure.

REP 11.21 Option Feeder No Paper Sensor B405

Parts List on PL 11.2

Removal

WARNING

Switch off the electricity to the machine, GP 10. Disconnect the power cord from the customer supply while performing tasks that do not need electricity. Electricity can cause death or injury. Moving parts can cause injury.

1. Remove the option feeder assembly, REP 11.1.
2. Remove the harness from the clamp, Figure 1.
3. Disconnect PJ4203, then remove the option feeder no paper sensor, Figure 1.

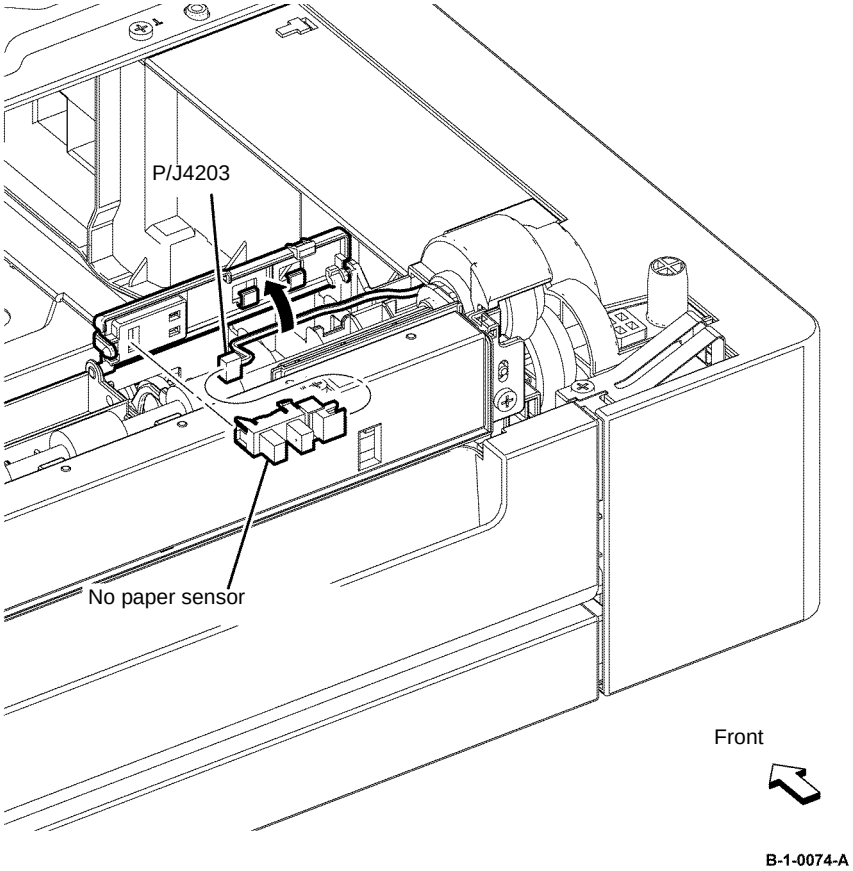

Figure 1 Option feeder no paper sensor removal

Replacement

1. The replacement is the reverse of the removal procedure.
2. Connect the harness to the option feeder no paper sensor, then route the harness.

3. Set the left shaft of the bracket to the feeder first, then set the other side.

REP 11.22 Option Feeder No Paper Sensor B400

Parts List on PL 11.2

Removal

WARNING

Switch off the electricity to the machine, GP 10. Disconnect the power cord from the customer supply while performing tasks that do not need electricity. Electricity can cause death or injury. Moving parts can cause injury.

1. Remove the option feeder assembly, REP 11.2.
2. Remove the harness from the clamp, Figure 1.
3. Disconnect PJ4203, then remove the option feeder no paper sensor, Figure 1.

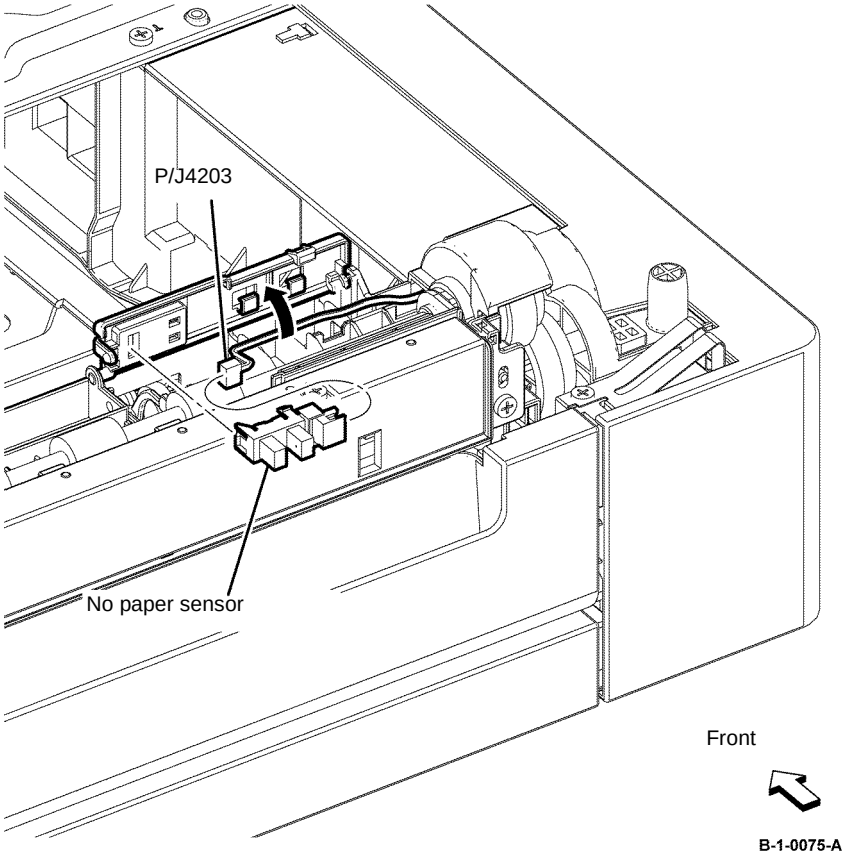

Figure 1 Option feeder no paper sensor removal

Replacement

1. The replacement is the reverse of the removal procedure.

2. Connect the harness to the option feeder no paper sensor, then route the harness.
3. Set the left shaft of the bracket to the feeder first, then set the other side.

REP 11.23 Option Feeder Path Sensor B405

Parts List on PL 11.4

Removal

WARNING

Switch off the electricity to the machine, GP 10. Disconnect the power cord from the customer supply while performing tasks that do not need electricity. Electricity can cause death or injury. Moving parts can cause injury.

1. Remove the option feeder assembly, REP 11.1.
2. Remove two screws (silver, tapping, 8mm), then remove the chute cover, Figure 1.
3. Disconnect PJ4212, then remove the option feeder path sensor, Figure 1.

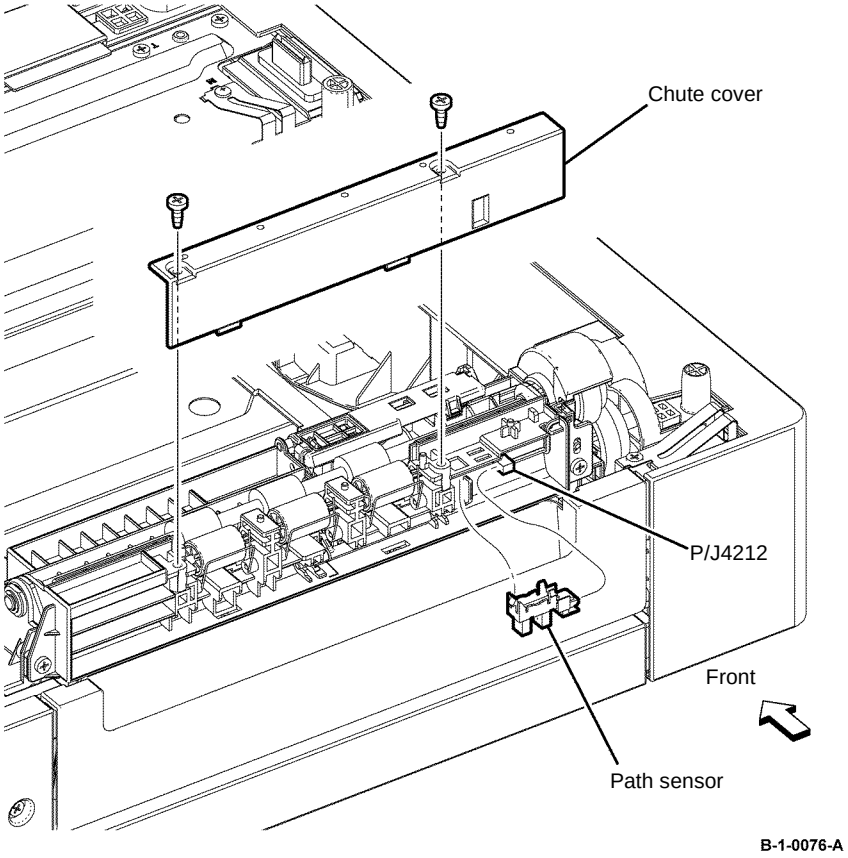

Figure 1 Option feeder path sensor removal

Replacement

The replacement is the reverse of the removal procedure.

REP 11.24 Option Feeder Path Sensor B400

Parts List on PL 11.4

Removal

WARNING

Switch off the electricity to the machine, GP 10. Disconnect the power cord from the customer supply while performing tasks that do not need electricity. Electricity can cause death or injury. Moving parts can cause injury.

1. Remove the option feeder assembly, REP 11.2.
2. Remove two screws (silver, tapping, 8mm), then remove the chute cover, Figure 1.
3. Disconnect PJ4212, then remove the option feeder path sensor, Figure 1.

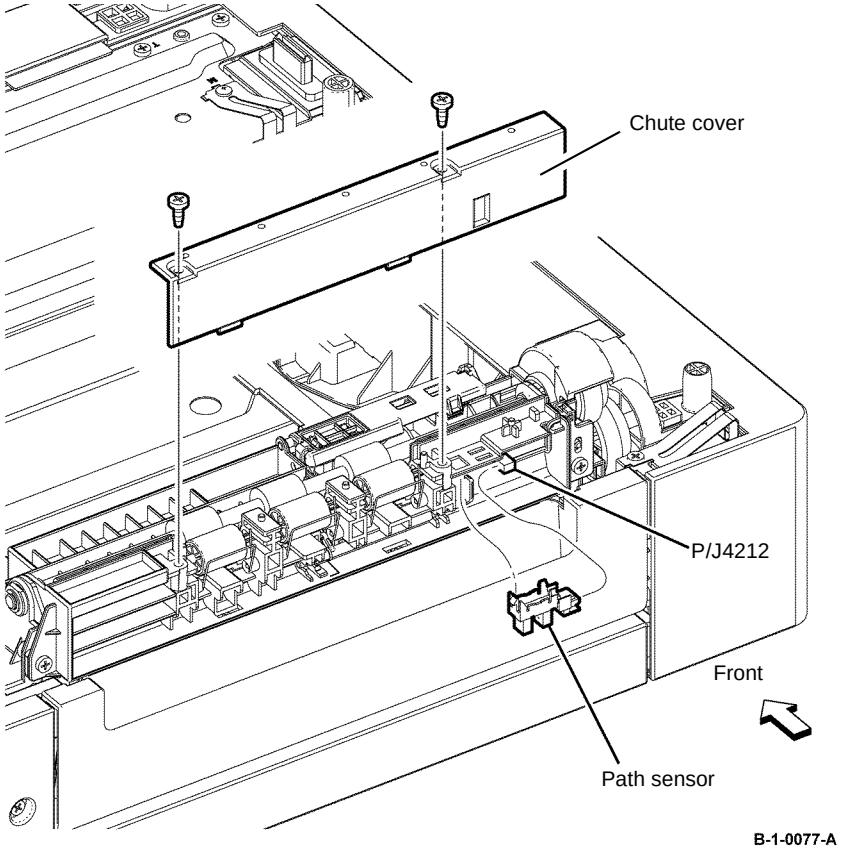

Figure 1 Option feeder path sensor removal

Replacement

The replacement is the reverse of the removal procedure.

REP 11.25 Option Feeder No Paper Actuator B405

Parts List on PL 11.2

Removal

WARNING

Switch off the electricity to the machine, GP 10. Disconnect the power cord from the customer supply while performing tasks that do not need electricity. Electricity can cause death or injury. Moving parts can cause injury.

1. Remove the tray assembly, PL 9.2 Item 1.
2. Remove the option feeder assembly, REP 11.1.
3. Remove the E-ring, then remove the option feeder no paper actuator, Figure 1.

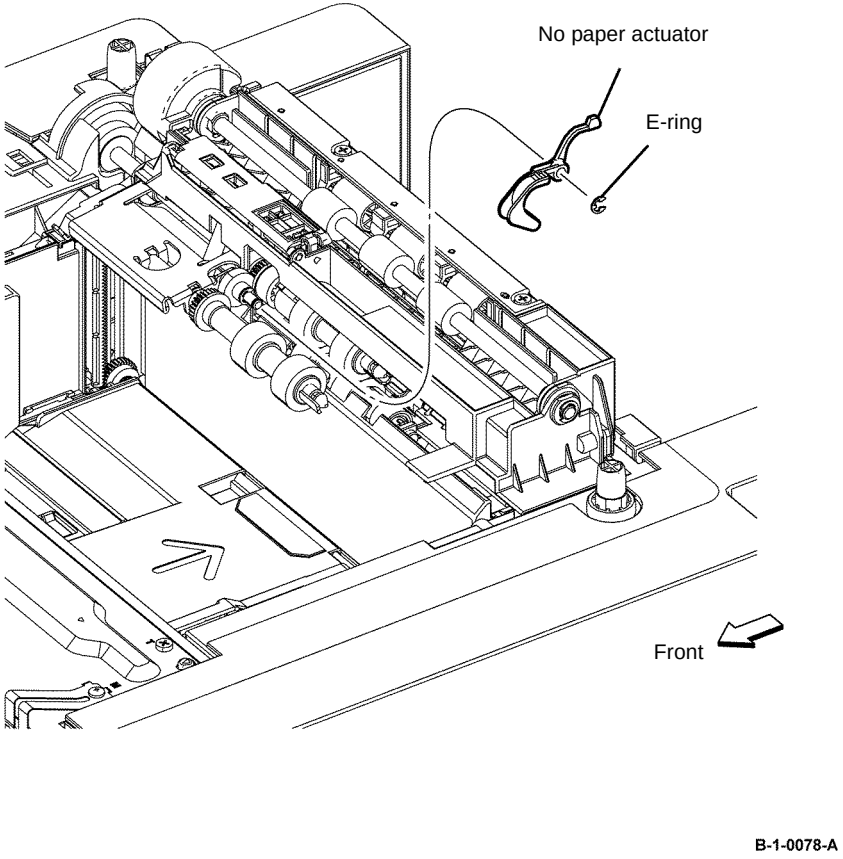

Figure 1 Option feeder no paper actuator removal

Replacement

The replacement is the reverse of the removal procedure.

REP 11.26 Option Feeder No Paper Actuator B400

Parts List on PL 11.2

Removal

WARNING

Switch off the electricity to the machine, GP 10. Disconnect the power cord from the customer supply while performing tasks that do not need electricity. Electricity can cause death or injury. Moving parts can cause injury.

1. Remove the tray assembly, PL 9.2 Item 1.
2. Remove the option feeder assembly, REP 11.2.
3. Remove the E-ring, then remove the option feeder no paper actuator, Figure 1.

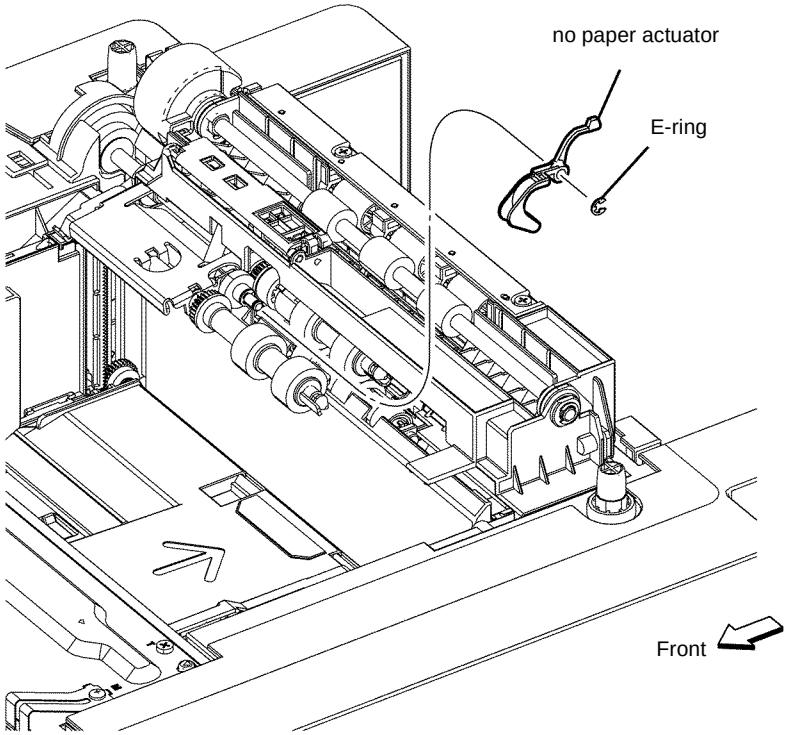

Figure 1 Option feeder no paper actuator removal

Replacement

The replacement is the reverse of the removal procedure.

REP 11.27 Option Feeder Take Away Roll Assembly B405

Parts List on PL 11.2

Removal

WARNING

Switch off the electricity to the machine, GP 10. Disconnect the power cord from the customer supply while performing tasks that do not need electricity. Electricity can cause death or injury. Moving parts can cause injury.

1. Remove the option tray assembly, PL 9.2 Item 1.
2. Remove the option feeder assembly, REP 11.1.
3. Remove the option feeder assembly, REP 11.13.
4. Remove the option feeder takeaway clutch assembly, REP 11.19.
5. Remove the E-ring and nudger bearing, then remove the option feeder take away roll assembly by shifting it to the left, Figure 1.

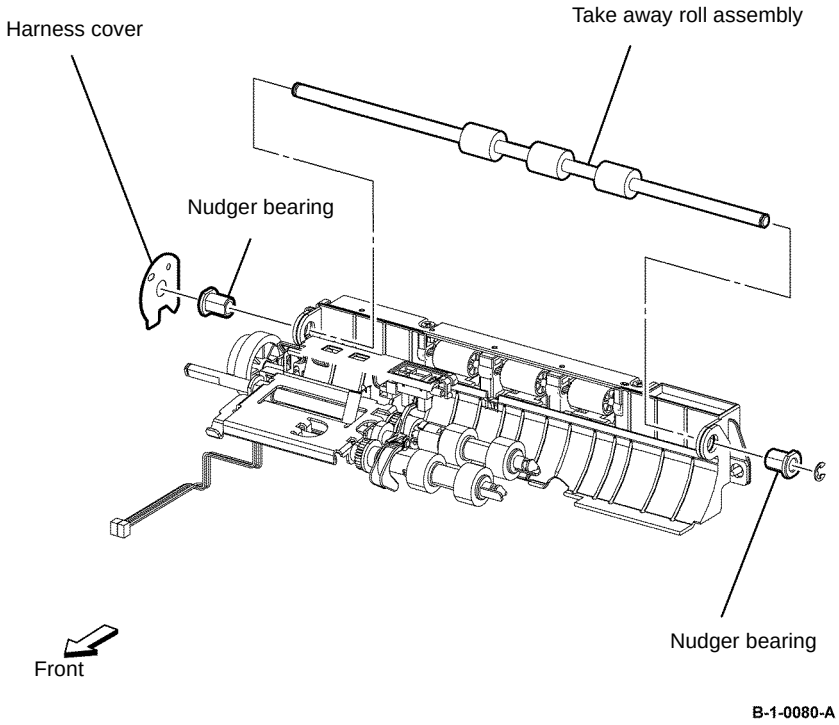

Figure 1 Option feeder take away roll assembly removal

Replacement

The replacement is the reverse of the removal procedure.

REP 11.28 Option Feeder Takeaway Roll Assembly B400

Parts List on PL 11.2

Removal

WARNING

Switch off the electricity to the machine, GP 10. Disconnect the power cord from the customer supply while performing tasks that do not need electricity. Electricity can cause death or injury. Moving parts can cause injury.

1. Remove the option tray assembly, PL 9.2 Item 1.
2. Remove the option feeder assembly, REP 11.2.
3. Remove the option feeder assembly, REP 11.14.
4. Remove the option feeder takeaway clutch assembly, REP 11.20.
5. Remove the E-ring and nudger bearing, then remove the option feeder take away roll assembly by shifting it to the left, Figure 1.

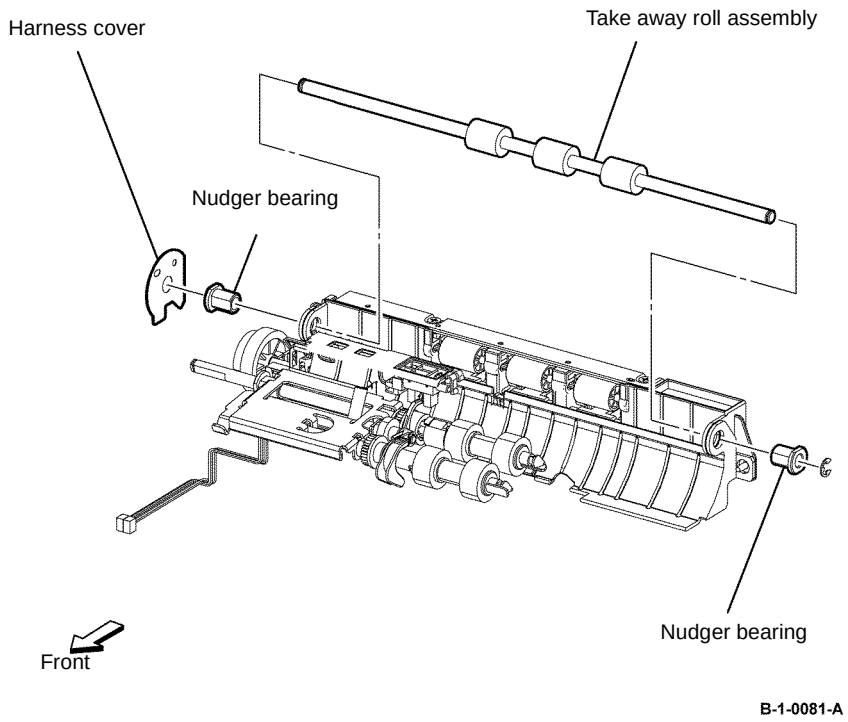

Figure 1 Option feeder take away roll assembly removal

Replacement

The replacement is the reverse of the removal procedure.

REP 11.29 Option Feeder Tray Lock Spring

Parts List on PL 11.3

Removal

WARNING

Switch off the electricity to the machine, GP 10. Disconnect the power cord from the customer supply while performing tasks that do not need electricity. Electricity can cause death or injury. Moving parts can cause injury.

1. Remove the option feeder tray assembly, PL 11.3 Item 1.
2. Remove the bottom lock cover, Figure 1:
   a. Stand the option feeder tray on its side with the bottom lock cover face up (1).
   b. Carefully pry the bottom lock cover at two points (2) releasing two tabs in the option feeder tray, then remove the bottom lock cover (1).

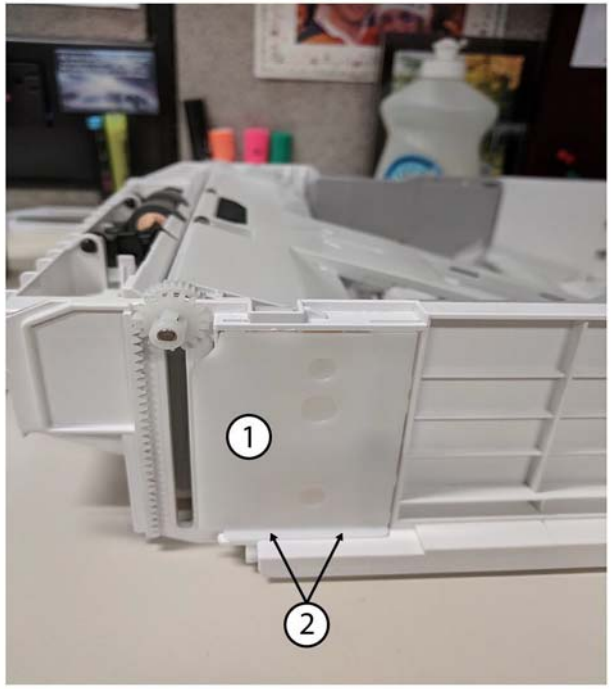

Figure 1 Bottom lock cover removal

3. Remove the lock spring (1), Figure 2.

   NOTE: *To ensure the gears do not fall out of the lift assembly (2), hold the lift assembly in-place while removing the lock spring.*

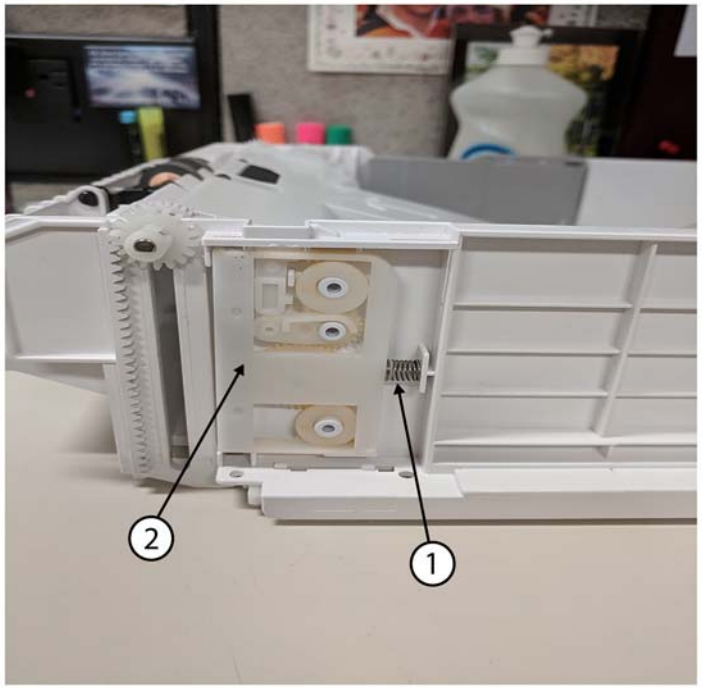

B-1-0278-A

Figure 2 Lift assembly removal

4. Verify lift operation by manually lifting the tray lift mechanism.

Replacement

The replacement is the reverse of the removal procedure.

If the assembly comes apart during removal, re-assemble the assembly as shown below to ensure the lift dampening of the assembly function's properly, Figure 3.

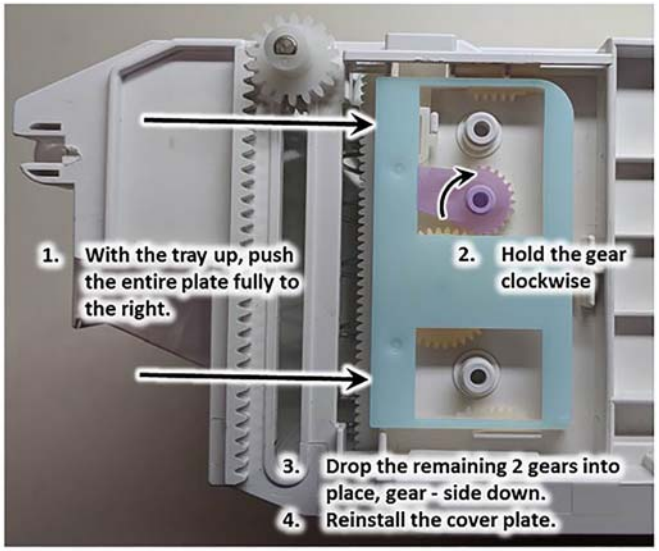

B-1-0280-A

Figure 3 Option feeder tray lift reassembly

REP 13.1 MSI Retard Roll Assembly, MSI Cover B405

Parts List on PL 13.2

Removal

WARNING

Switch off the electricity to the machine, GP 10. Disconnect the power cord from the customer supply while performing tasks that do not need electricity. Electricity can cause death or injury. Moving parts can cause injury.

1. Open the MSI cover, PL 13.2 Item 99.
2. Pull out the MSI tray assembly, PL 13.2 Item 9.
3. Release the hook that fixes the MSI retard roll assembly to the MSI frame assembly. Remove the MSI retard roll assembly by rotating it in the arrowed direction, Figure 1.
4. Release the hole on the MSI cover from the boss on the MSI frame assembly, then remove the MSI cover, Figure 1.

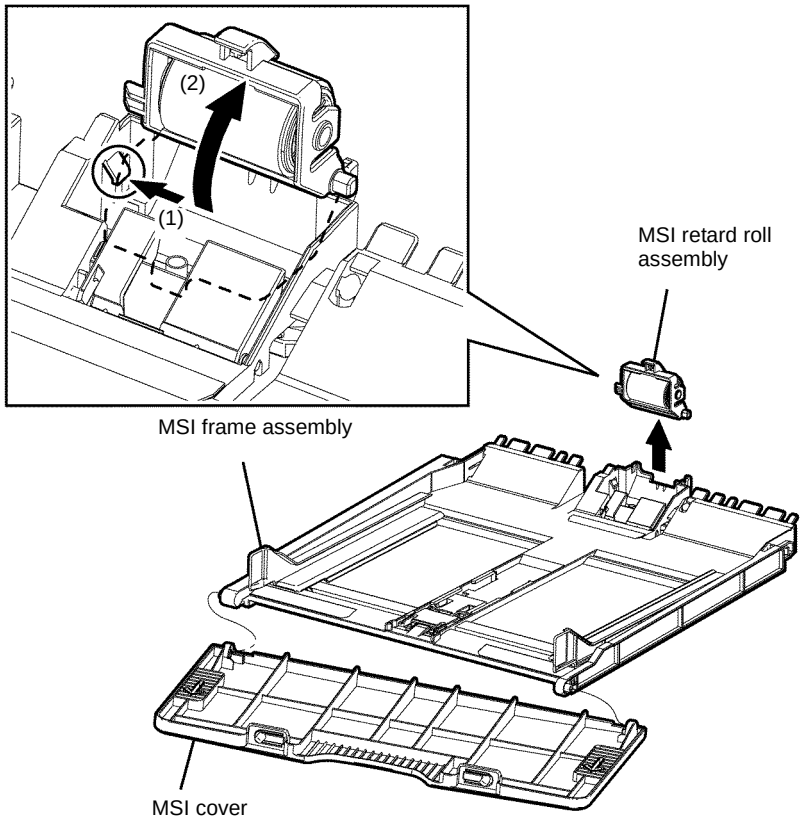

Figure 1 MSI cover and retard roll assembly removal

Replacement

The replacement is the reverse of the removal procedure.

REP 13.2 MSI Retard Roll Assembly, MSI Cover B400

Parts List on PL 13.2

Removal

WARNING

Switch off the electricity to the machine, GP 10. Disconnect the power cord from the customer supply while performing tasks that do not need electricity. Electricity can cause death or injury. Moving parts can cause injury.

1. Open the MSI cover, PL 13.2 Item 99.
2. Pull out the MSI tray assembly, PL 13.2 Item 9.
3. Release the hook that fixes the MSI retard roll assembly to the MSI frame assembly, then remove the MSI retard roll assembly by rotating it in the arrowed direction. Figure 1.
4. Release the hole on the MSI cover from the boss on the MSI frame assembly, then remove the MSI cover, Figure 1.

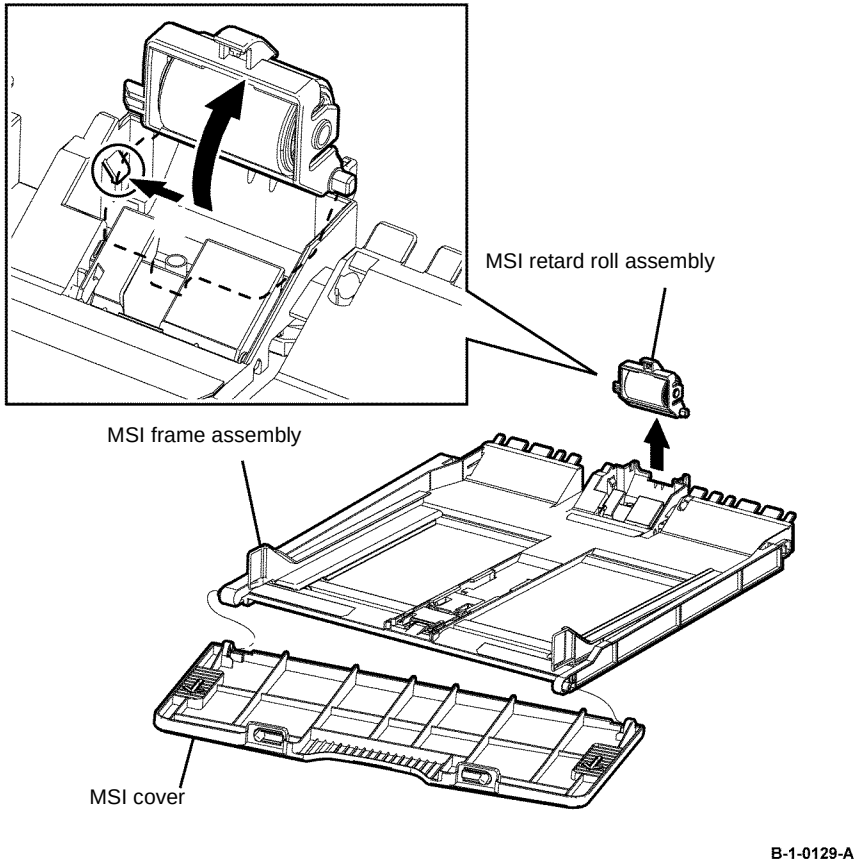

Figure 1 MSI cover and retard roll assembly removal

Replacement

The replacement is the reverse of the removal procedure.

REP 13.3 MSI Feed Solenoid B405

Parts List on PL 13.1

Removal

WARNING

Switch off the electricity to the machine, GP 10. Disconnect the power cord from the customer supply while performing tasks that do not need electricity. Electricity can cause death or injury. Moving parts can cause injury.

1. Open the MSI cover, PL 13.2 Item 99.
2. Pull out the MSI tray assembly, PL 13.2 Item 9.
3. Remove the option tray assembly, PL 9.2 Item 1.
4. Remove the front cover assembly, REP 19.1.
5. Remove the drum Cartridge, REP 8.1.
6. Remove the rear cover assembly, REP 19.13.
7. Remove the ESS window cover assembly, REP 19.3.
8. Remove the WIFI cap cover, REP 19.19.
9. Remove the left cover, REP 19.11.
10. Remove the ESS PWB, REP 18.1.
11. Remove the main drive assembly, REP 3.1.
12. Remove the MCU cover by releasing the hook. Disconnect PJ15 from the MCU PWB, then release the harness of the MSI feed solenoid from the harness guide, Figure 1.

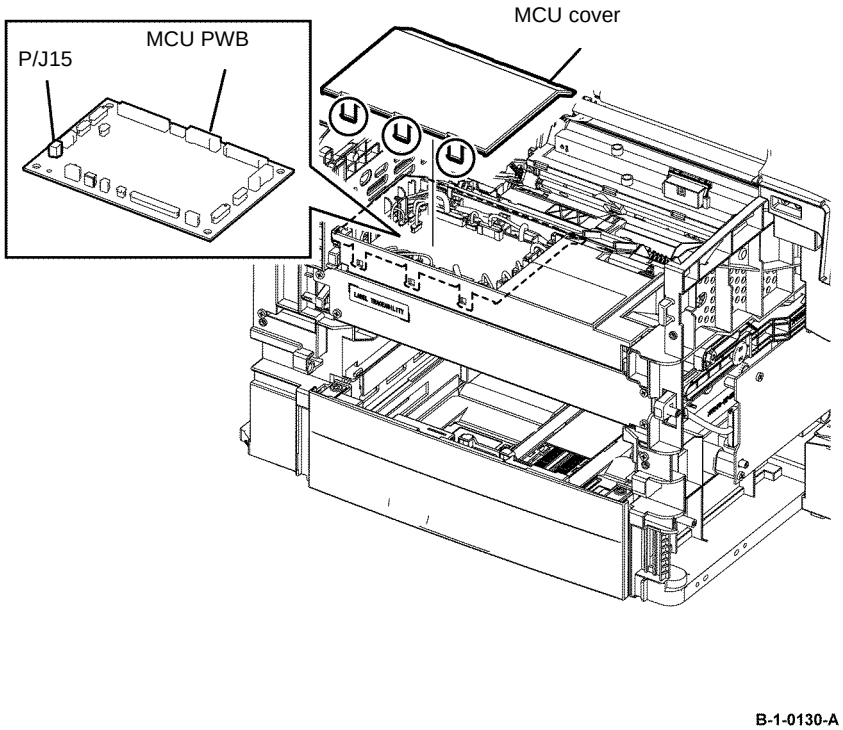

Figure 1 MSI feed solenoid disconnect

13. Remove one screw (silver, tapping, 8mm), then remove the MSI feed solenoid, Figure 2.

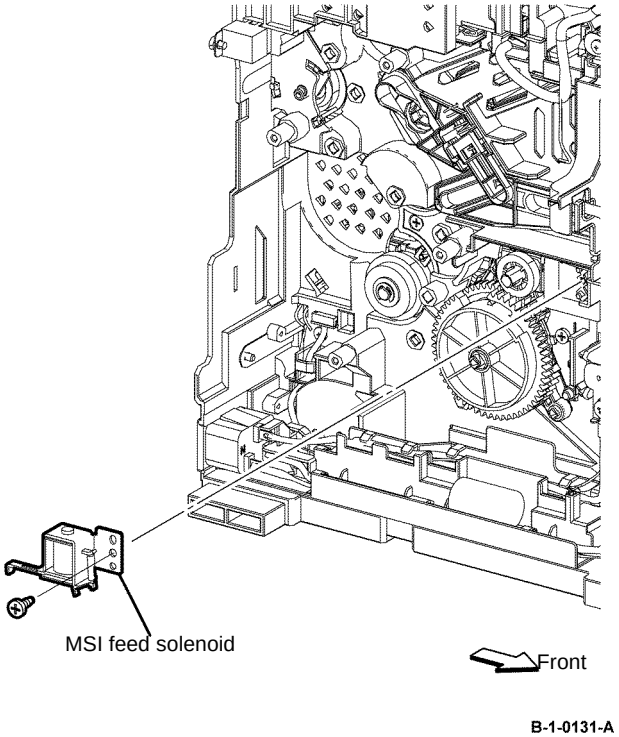

Figure 2 MSI feed solenoid removal

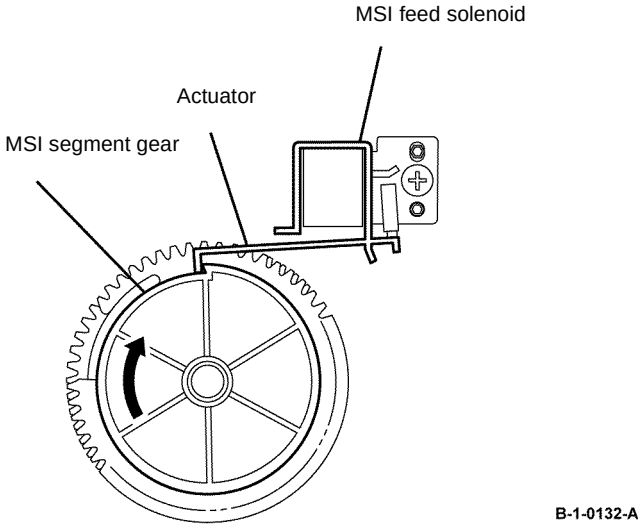

Figure 3 MSI feed solenoid installation

Replacement

1. The replacement is the reverse of the removal procedure.
2. When installing the MSI feed solenoid, ensure that the actuator is latched to the MSI segment gear 1, Figure 3.

REP 13.4 MSI Feed Solenoid B400

Parts List on PL 13.1

Removal

WARNING

Switch off the electricity to the machine, GP 10. Disconnect the power cord from the customer supply while performing tasks that do not need electricity. Electricity can cause death or injury. Moving parts can cause injury.

1. Open the MSI cover, PL 13.2 Item 99.
2. Pull out the MSI tray assembly, PL 13.2 Item 9.
3. Remove the option tray assembly, PL 9.2 Item 1.
4. Remove the front cover assembly, REP 19.2.
5. Remove the Drum cartridge. REP 8.2.
6. Remove the rear cover assembly, REP 19.14.
7. Remove the UI console assembly, REP 1.3.
8. Remove the exit top cover assembly, REP 19.10.
9. Remove the WIFI cap cover, REP 19.20.
10. Remove the ESS window cover assembly, REP 19.4.
11. Remove the front/left UI cover assembly, REP 1.4.
12. Remove the left cover, REP 19.12.
13. Remove the ESS PWB, REP 18.2.
14. Remove the main drive assembly, REP 3.2.
15. Remove the MCU cover by releasing the hook. Disconnect PJ15 from the MCU PWB, then release the harness of the MSI feed solenoid from the harness guide, Figure 1.

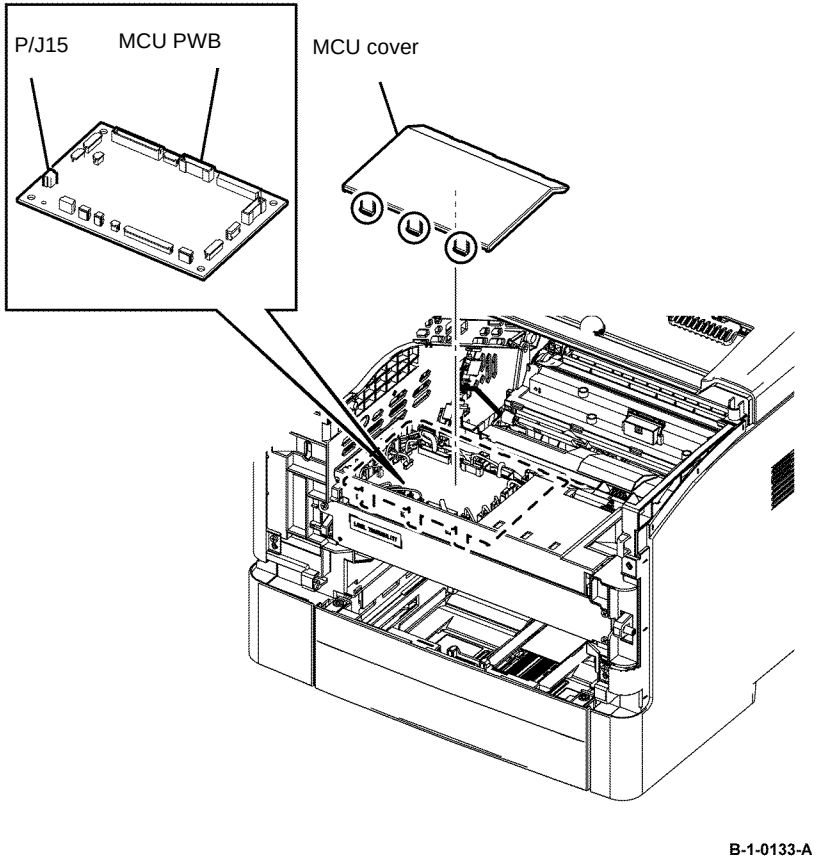

Figure 1 MSI feed solenoid disconnect

16. Remove one screw (silver, tapping, 8mm), then remove the MSI feed solenoid, Figure 2.

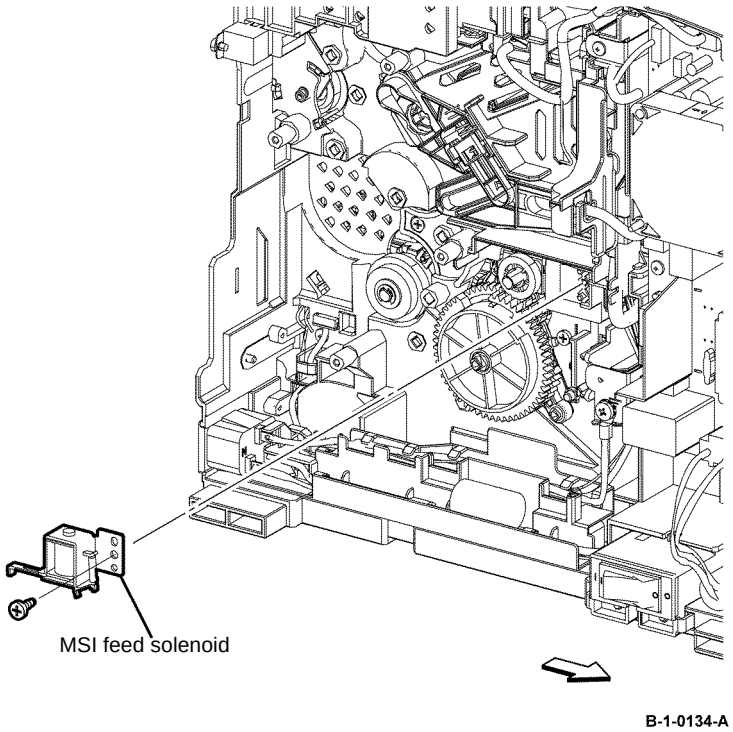

Figure 2 MSI feed solenoid removal

Replacement

1. The replacement is the reverse of the removal procedure.
2. When installing the MSI feed solenoid, ensure that the actuator is latched to the MSI segment gear 1, Figure 3.

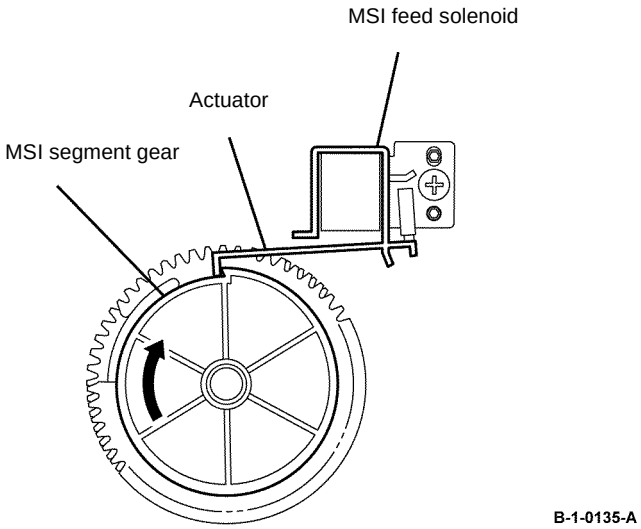

Figure 3 MSI feed solenoid installation

REP 13.5 Pick Up Holder Assembly B405

Parts List on PL 13.1

Removal

WARNING

Switch off the electricity to the machine, GP 10. Disconnect the power cord from the customer supply while performing tasks that do not need electricity. Electricity can cause death or injury. Moving parts can cause injury.

1. Open the MSI cover, PL 13.2 Item 99.
2. Pull out the MSI tray assembly, PL 13.2 Item 9.
3. Remove the option tray assembly, PL 9.2 Item 1.
4. Remove the drum cartridge, REP 8.1.
5. Place the printer on its right side.
6. Remove the pick up flange by releasing the hook, then remove the pick up holder assembly, Figure 1.

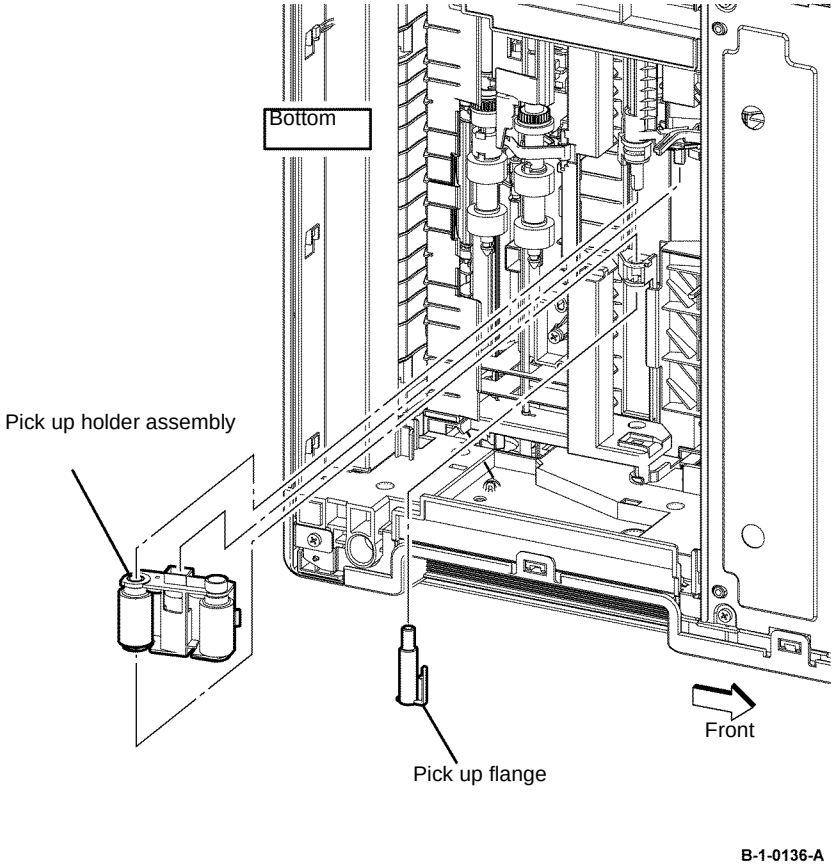

Figure 1 Pick up holder removal

Replacement

The replacement is the reverse of the removal procedure.

REP 13.6 Pick Up Holder Assembly B400

Parts List on PL 13.1

Removal

WARNING

Switch off the electricity to the machine, GP 10. Disconnect the power cord from the customer supply while performing tasks that do not need electricity. Electricity can cause death or injury. Moving parts can cause injury.

1. Open the MSI cover, PL 13.2 Item 99.
2. Pull out the MSI tray assembly, PL 13.2 Item 9.
3. Remove the option tray assembly, PL 9.2 Item 1.
4. Remove the drum cartridge, REP 8.2.
5. Place the printer on its right side.
6. Remove the pick up flange by releasing the hook, then remove the pick up holder assembly, Figure 1.

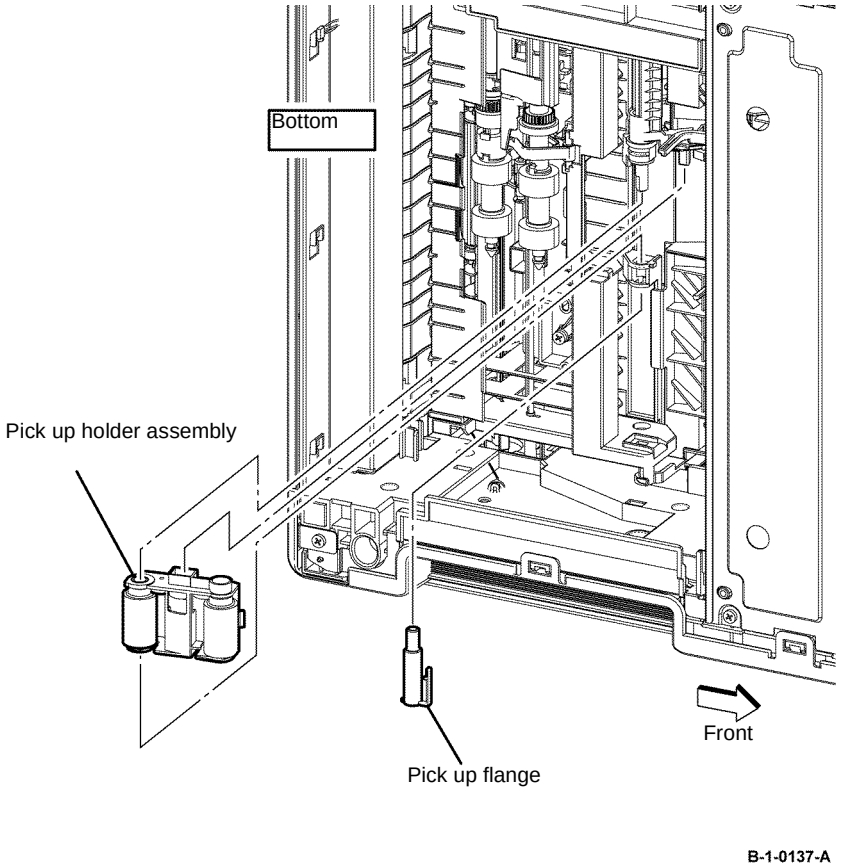

Figure 1 Pick up holder removal

Replacement

The replacement is the reverse of the removal procedure.

REP 14.1 Duplex Chute Assembly B405

Parts List on PL 14.1

Removal

WARNING

Switch off the electricity to the machine, GP 10. Disconnect the power cord from the customer supply while performing tasks that do not need electricity. Electricity can cause death or injury. Moving parts can cause injury.

1. Remove the rear cover assembly, REP 19.13.
2. Remove the CRU transfer roller assembly, REP 6.1.
3. Remove one screw (silver, tapping, 4mm), then remove the DTS out earth spring from the rear cover assembly, Figure 1.
4. Release the two hooks, then remove the duplex chute assembly by sliding it to the left until the four bosses are released, Figure 1.

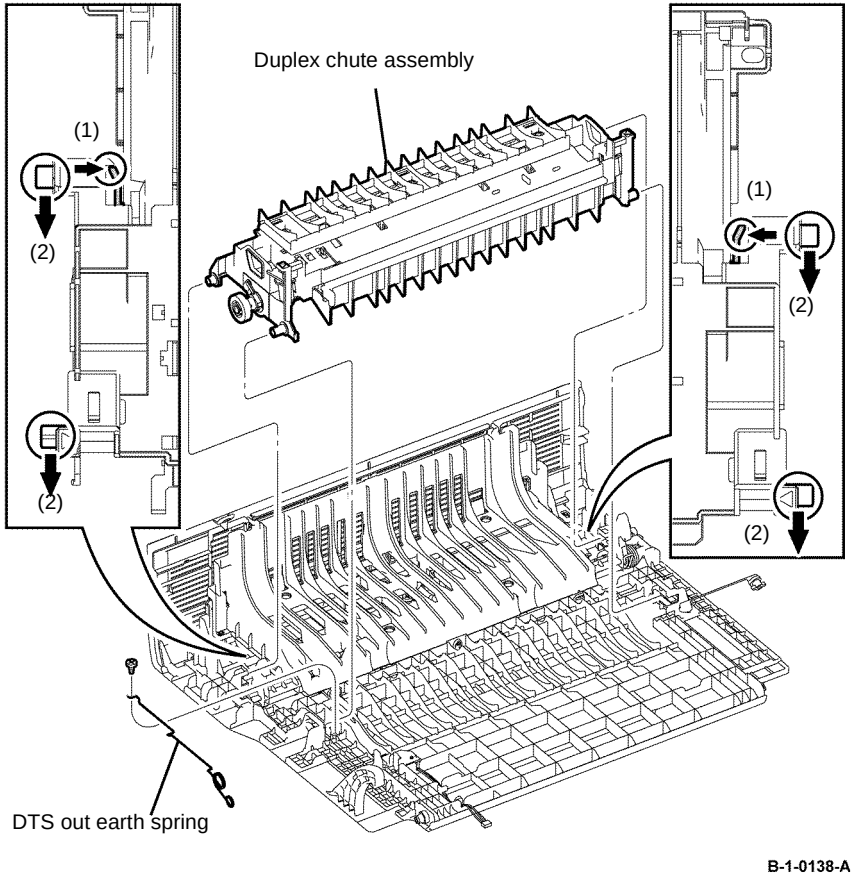

Figure 1 Duplex chute assembly removal

Replacement

1. The replacement is the reverse of the removal procedure.
2. When installing the DTS out earth spring, ensure it is positioned above the DTS earth spring, on the duplex chute assembly, Figure 2.

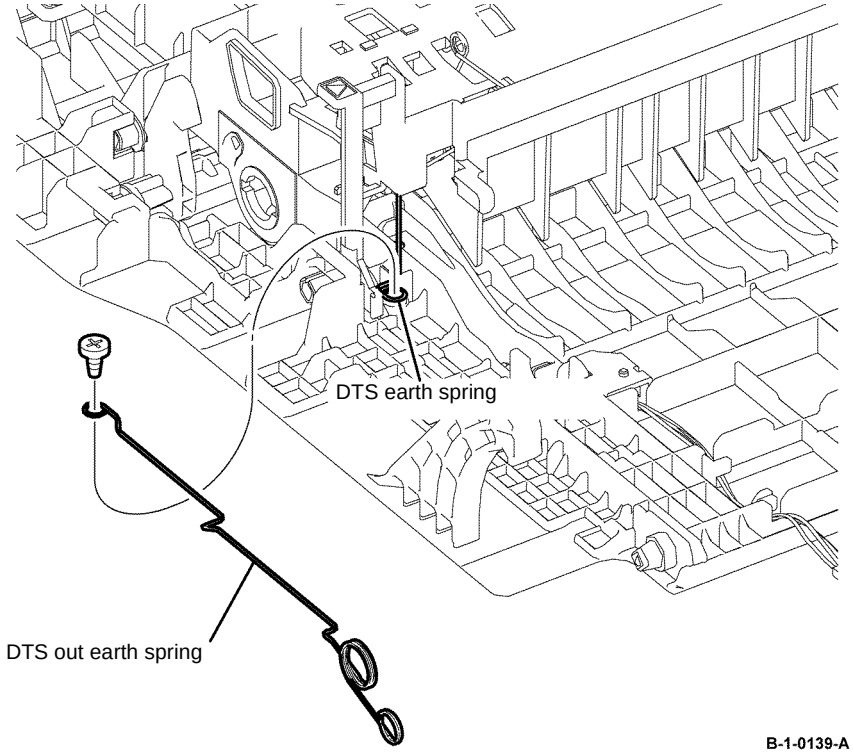

Figure 2 DTS out earth spring installation

REP 14.2 Duplex Chute Assembly B400

Parts List on PL 14.1

Removal

WARNING

Switch off the electricity to the machine, GP 10. Disconnect the power cord from the customer supply while performing tasks that do not need electricity. Electricity can cause death or injury. Moving parts can cause injury.

1. Remove the rear cover assembly, REP 19.14.
2. Remove the CRU transfer roller assembly, REP 6.2.
3. Remove one screw (silver, tapping, 4mm), then remove the DTS out earth spring from the rear cover assembly, Figure 1.
4. Release the two hooks, then remove the duplex chute assembly by sliding it to the left until the four bosses are released, Figure 1.

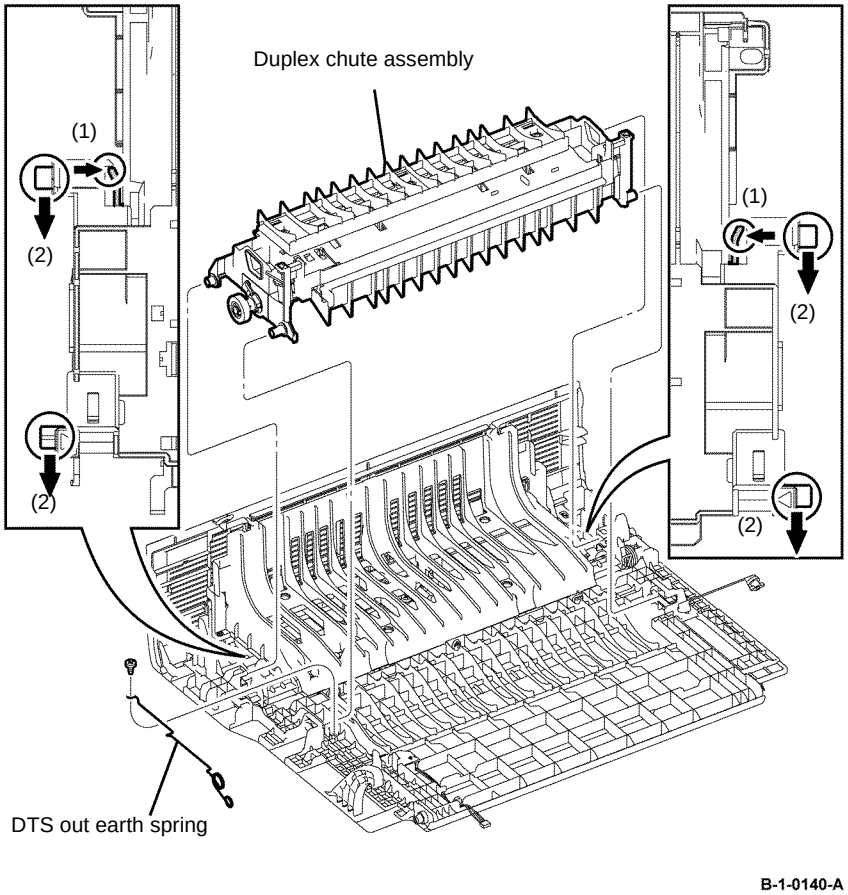

Figure 1 Duplex chute assembly removal

Replacement

1. The replacement is the reverse of the removal procedure.
2. When installing the DTS out earth spring, ensure it is positioned above the DTS earth spring, on the duplex chute assembly, Figure 2.

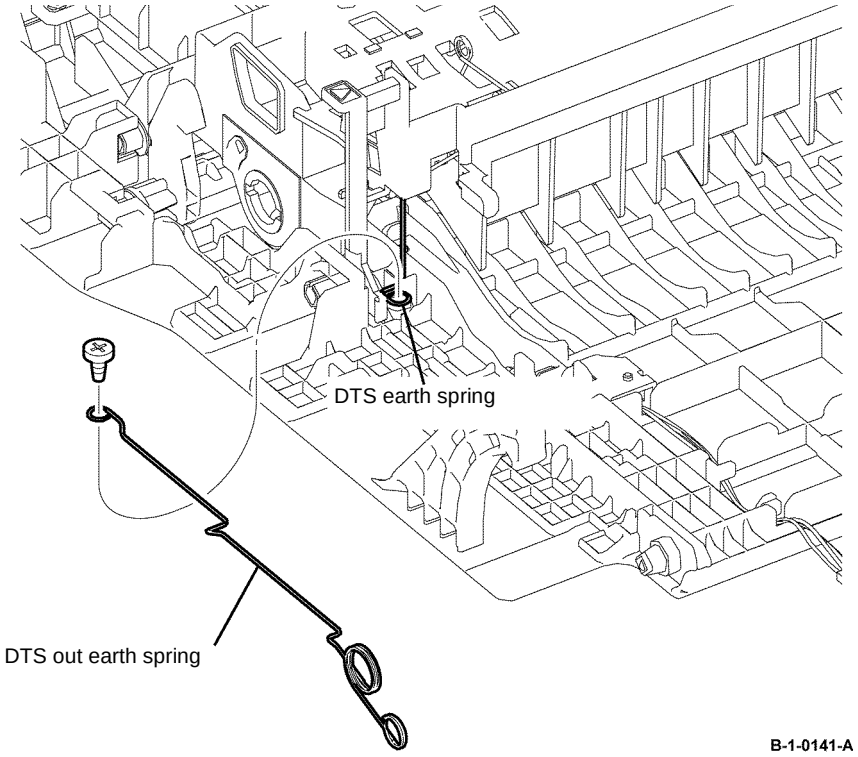

Figure 2 DTS out earth spring installation

REP 15.1 Registration Transport Assembly B405

Parts List on PL 15.1B

Removal

WARNING

Switch off the electricity to the machine, GP 10. Disconnect the power cord from the customer supply while performing tasks that do not need electricity. Electricity can cause death or injury. Moving parts can cause injury.

WARNING

Take care during this procedure. Sharp edges may be present that can cause injury.

1. Open the MSI cover, PL 13.2 Item 99.
2. Pull out the MSI tray assembly, PL 13.2 Item 9.
3. Remove the option tray assembly, PL 9.2 Item 1.
4. Remove the front cover assembly, REP 19.1.
5. Remove the drum Cartridge, REP 8.1.
6. Remove the rear cover assembly, REP 19.13.
7. Remove the ESS window cover assembly, REP 19.3.
8. Remove the WIFI cap cover, REP 19.19.
9. Remove the left cover, REP 19.11.
10. Remove the right cover, REP 19.7.
11. Remove the ESS PWB, REP 18.1.
12. Remove the fuser unit, REP 7.1.
13. Remove the main drive assembly, REP 3.1.
14. Remove the HVPS, REP 18.5.
15. Remove the rear interlock switch assembly, REP 15.3.
16. Release four hooks, then remove the MSI top frame, Figure 1.
17. Remove the MCU cover by releasing the hook. Disconnect P/J12 and P/J14 from the MCU PWB, then release the registration transport assembly harness from the harness guide, Figure 1.

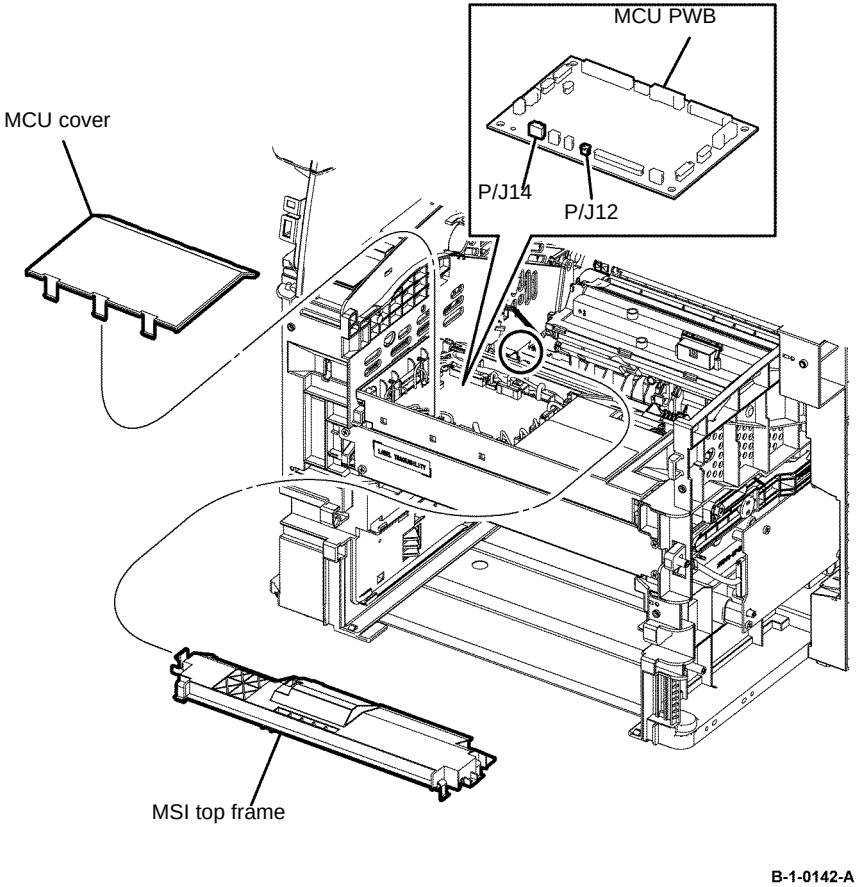

Figure 1 Registration transport assembly harness release

18. Remove one screw (silver, tapping, 8mm), then remove the MSI feed solenoid, Figure 2.
19. Remove the MSI segment gear 1, MSI segment gear 2, and MSI feed gear, Figure 2.

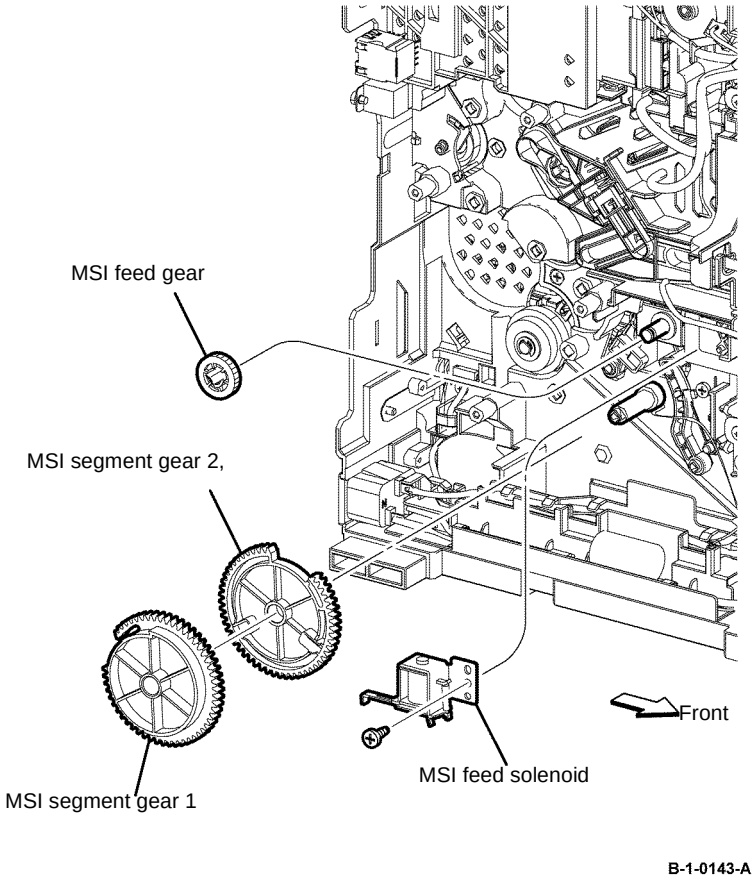

Figure 2 MSI feed solenoid, segment and MSI feed gears removal

20. Release the MSI feed spring from the MSI lifter arm, then remove the MSI lifter arm and MSI lifter stopper, Figure 3.

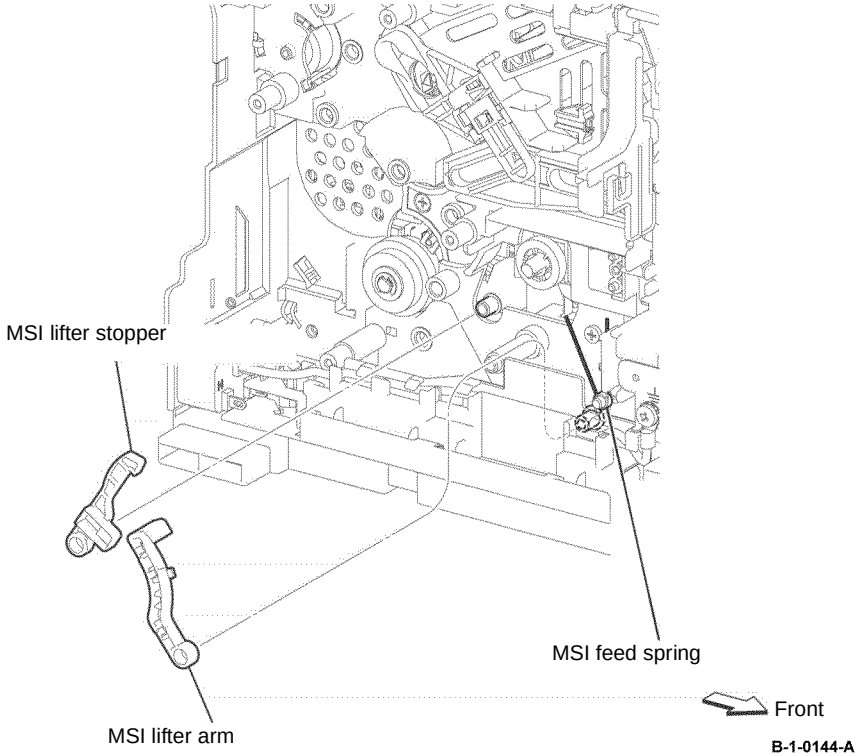

Figure 3 MSI lifter arm and lifter stopper removal

21. Release the hook, then remove the registration shutter sensor, Figure 4.

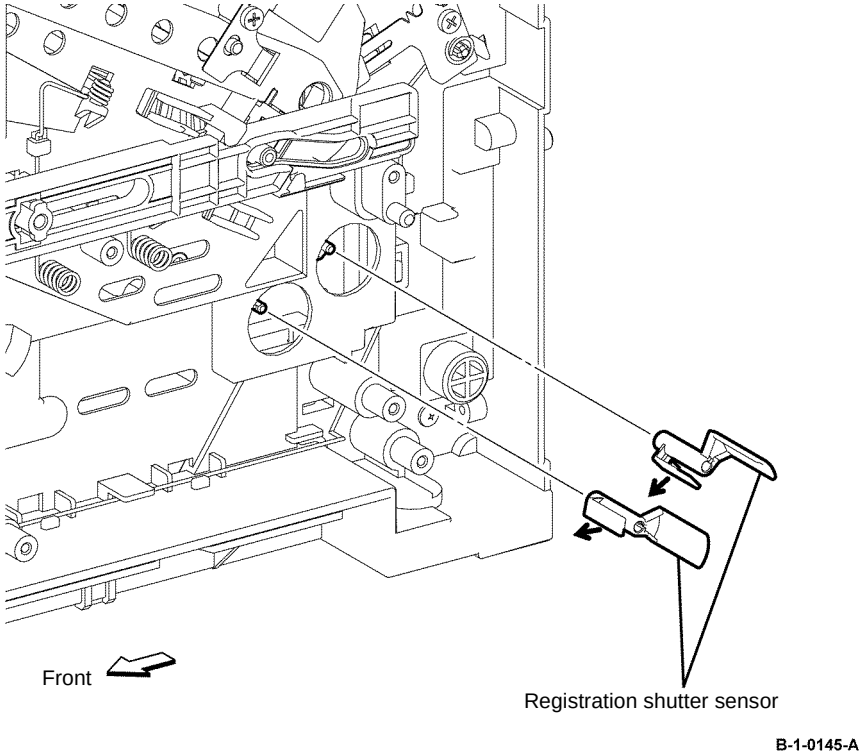

Figure 4 Registration shutter sensor removal

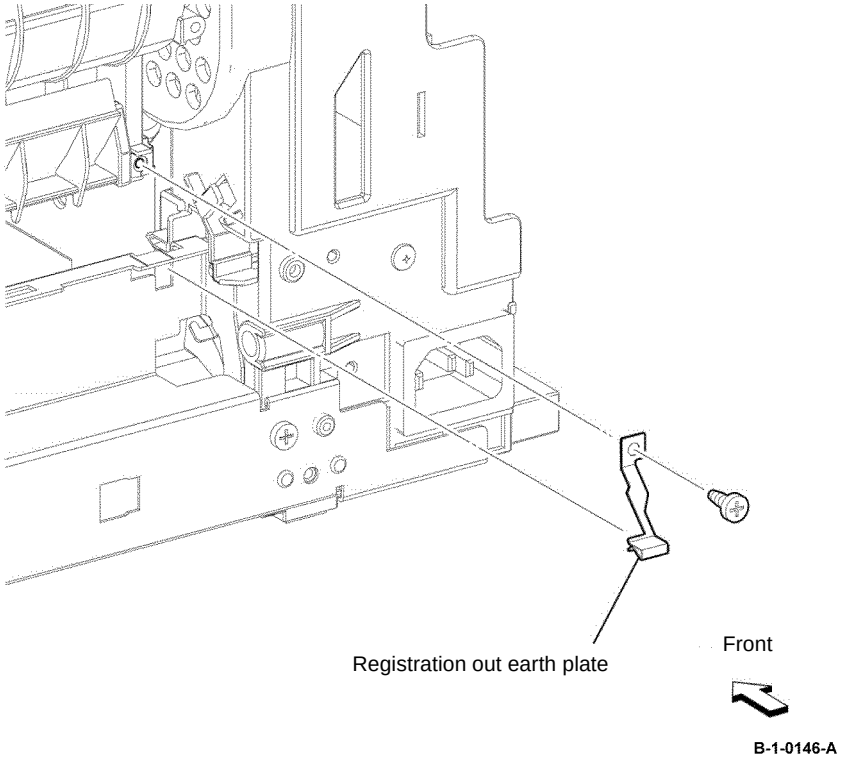

Figure 5 Registration out earth plate removal

22. Release one screw (silver, tapping, 8mm), then remove the registration out earth plate, Figure 5.

23. Remove three screws (silver, tapping, 8mm), then remove the registration transport assembly from the printer, Figure 6.

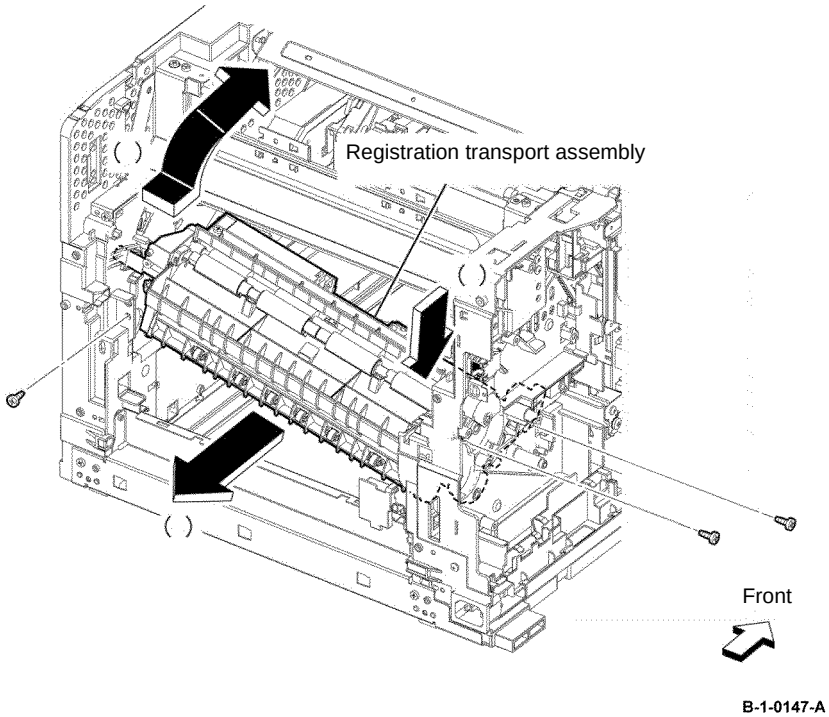

Figure 6 Registration transport assembly removal

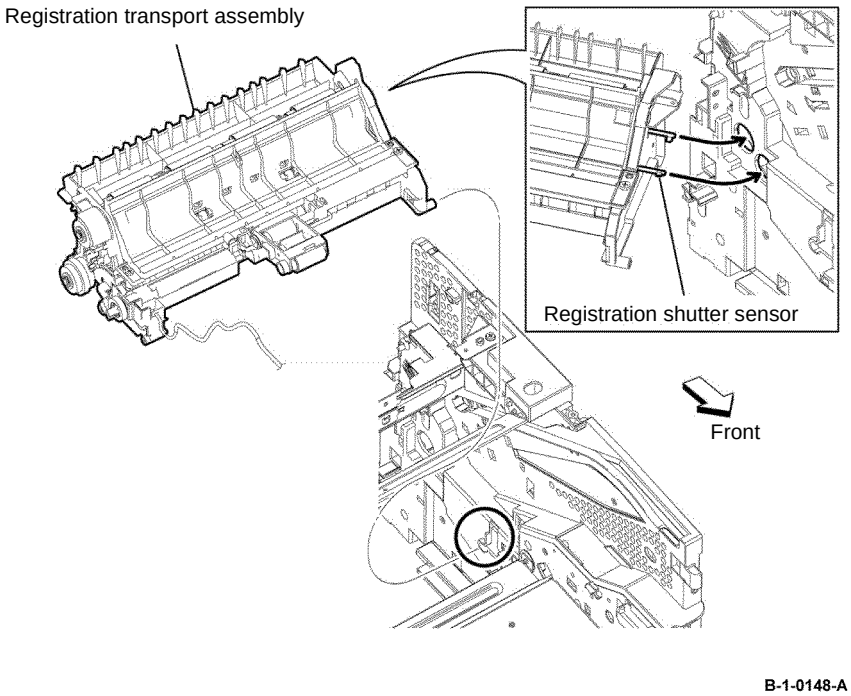

Figure 7 Registration transport assembly installation

Replacement

1. The replacement is the reverse of the removal procedure.
2. When installing the registration transport assembly, ensure the position of the boss and the registration shutter sensor is correct, Figure 7.
3. When installing the MSI lifter stopper, ensure the pickup holder assembly, is in the position shown, Figure 8.

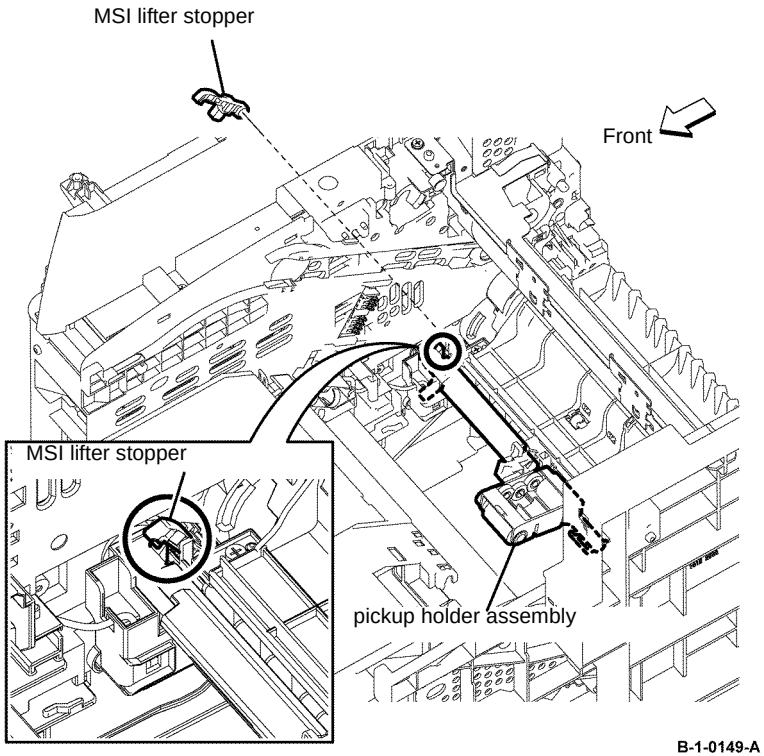

Figure 8 MSI lifter stopper installation

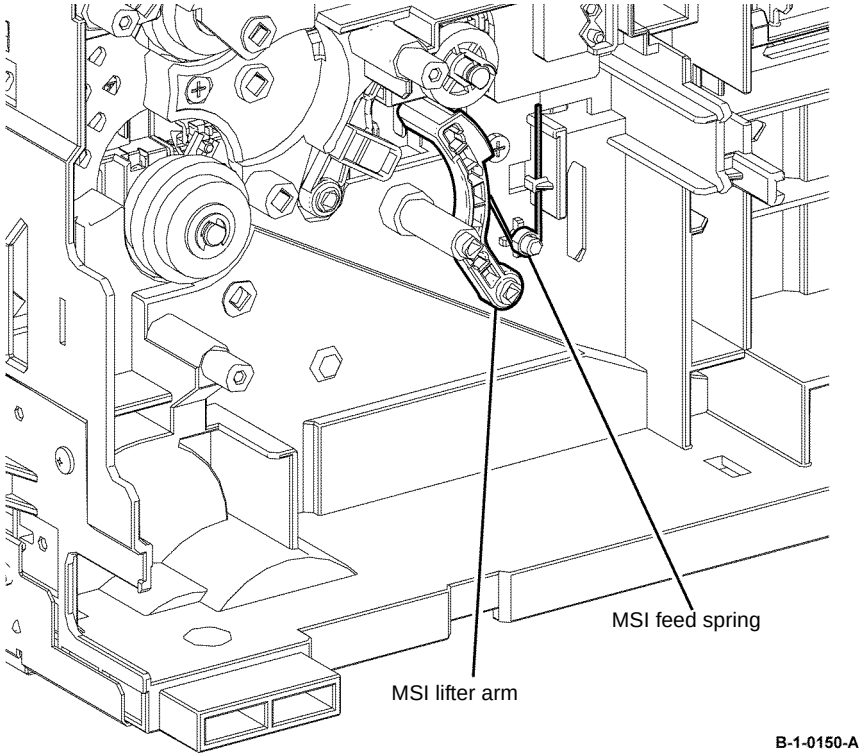

Figure 9 MSI lifter arm installation

4. When installing the MSI lifter arm, ensure the MSI feed spring, is correctly positioned, Figure 9.

5. When installing the MSI segment gear 1 and MSI segment gear 2, fit the bosses on the MSI segment gear 1 into the holes on the MSI segment gear 2, Figure 10.

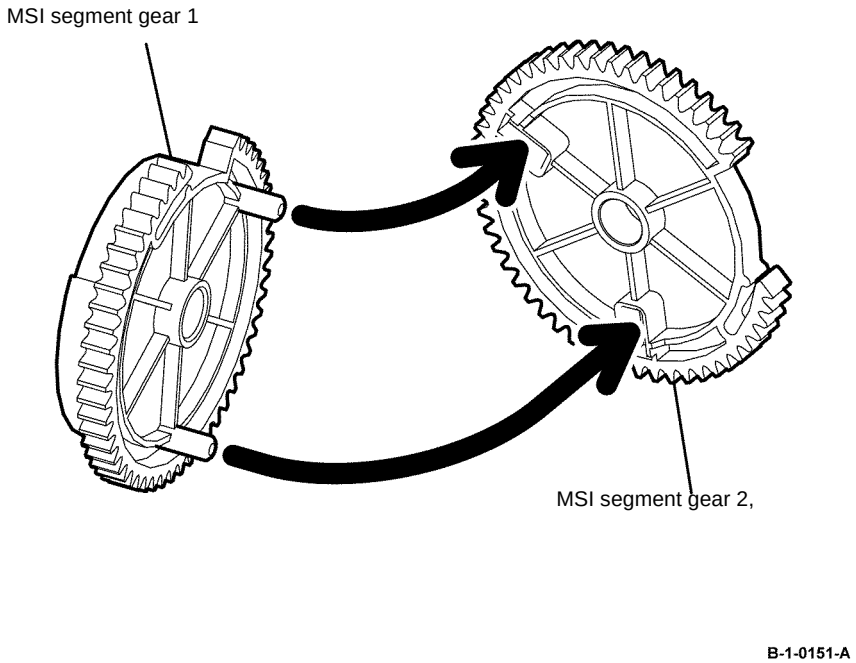

Figure 10 MSI segment gear 1 and 2 installation

6. When installing the MSI segment gear 1 and MSI segment gear 2, ensure that the actuator is the position shown, Figure 11.

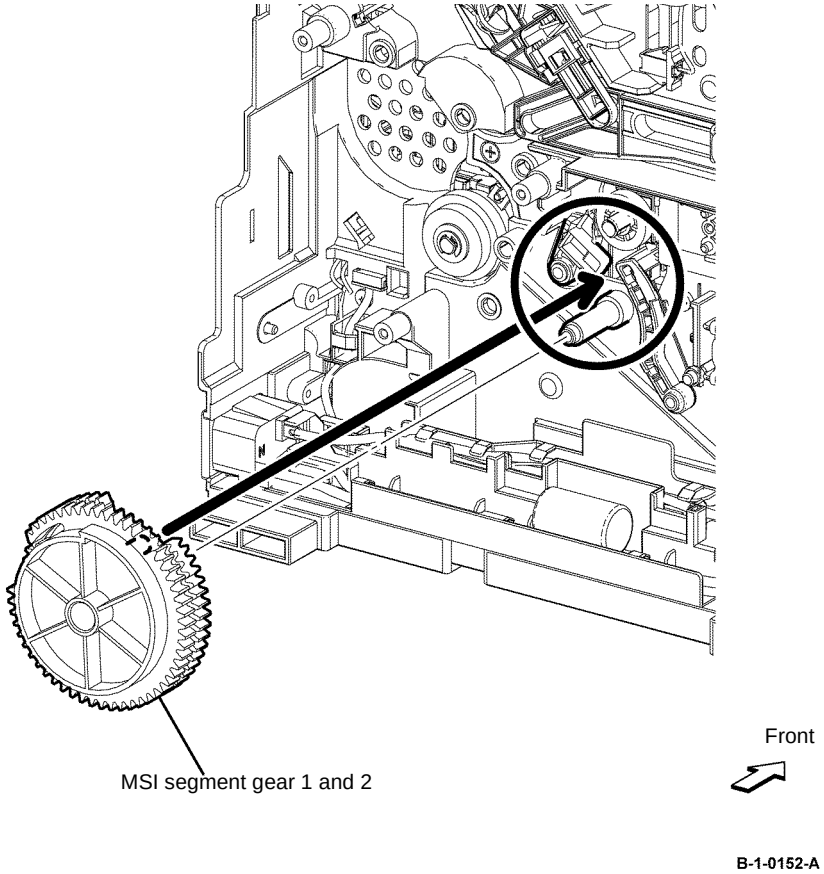

Figure 11 MSI segment gear 1 and 2 actuator position

7. When installing the MSI top frame, ensure the MSI no paper actuator, coupled with the MSI top frame, fits into the hole on the printer, Figure 12.

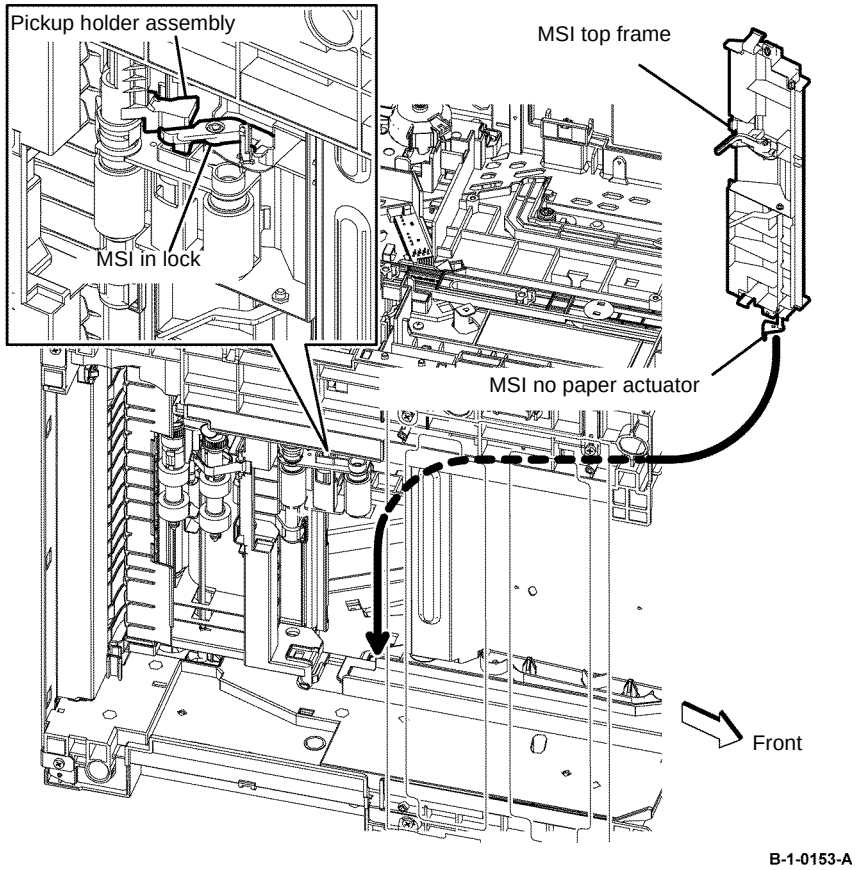

Figure 12 MSI top frame installation

REP 15.2 Registration Transport Assembly B400

Parts List on PL 15.1A

Removal

WARNING

Switch off the electricity to the machine, GP 10. Disconnect the power cord from the customer supply while performing tasks that do not need electricity. Electricity can cause death or injury. Moving parts can cause injury.

WARNING

Take care during this procedure. Sharp edges may be present that can cause injury.

1. Open the MSI cover, PL 13.2 Item 99.
2. Pull out the MSI tray assembly, PL 13.2 Item 9.
3. Remove the option tray assembly, PL 9.2 Item 1.
4. Remove the front cover assembly, REP 19.2.
5. Remove the drum cartridge. REP 8.2.
6. Remove the rear cover assembly, REP 19.14.
7. Remove the UI console assembly, REP 1.3.
8. Remove the exit top cover assembly, REP 19.10.
9. Remove the WIFI cap cover, REP 19.20.
10. Remove the ESS window cover assembly, REP 19.4.
11. Remove the front/left UI cover assembly, REP 1.4.
12. Remove the left cover, REP 19.12.
13. Remove the right cover, REP 19.8.
14. Remove the ESS PWB, REP 18.2.
15. Remove the fuser, REP 7.2.
16. Remove the main drive assembly, REP 3.2.
17. Remove the HVPS, REP 18.6.
18. Remove the rear interlock switch assembly, REP 15.4.
19. Release four hooks, then remove the MSI top frame, from the printer, Figure 1.
20. Remove the MCU cover, by releasing the hook, disconnect PJ12 and PJ14 from the MCU PWB, then release the registration transport assembly harness from the harness guide, Figure 1.

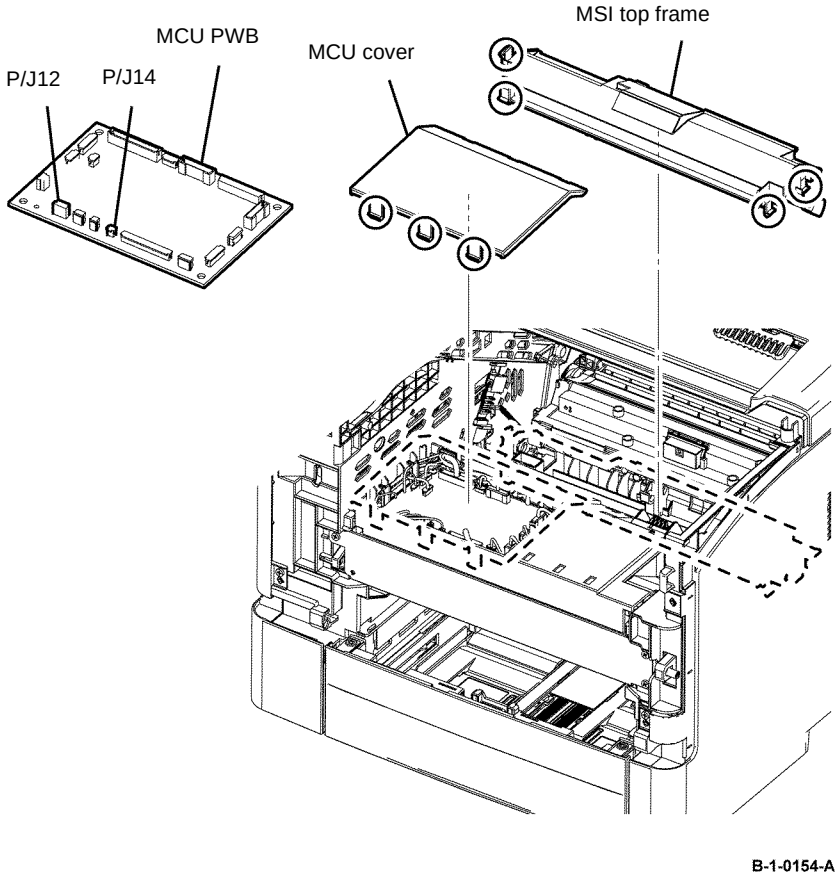

Figure 1 Registration transport assembly harness release

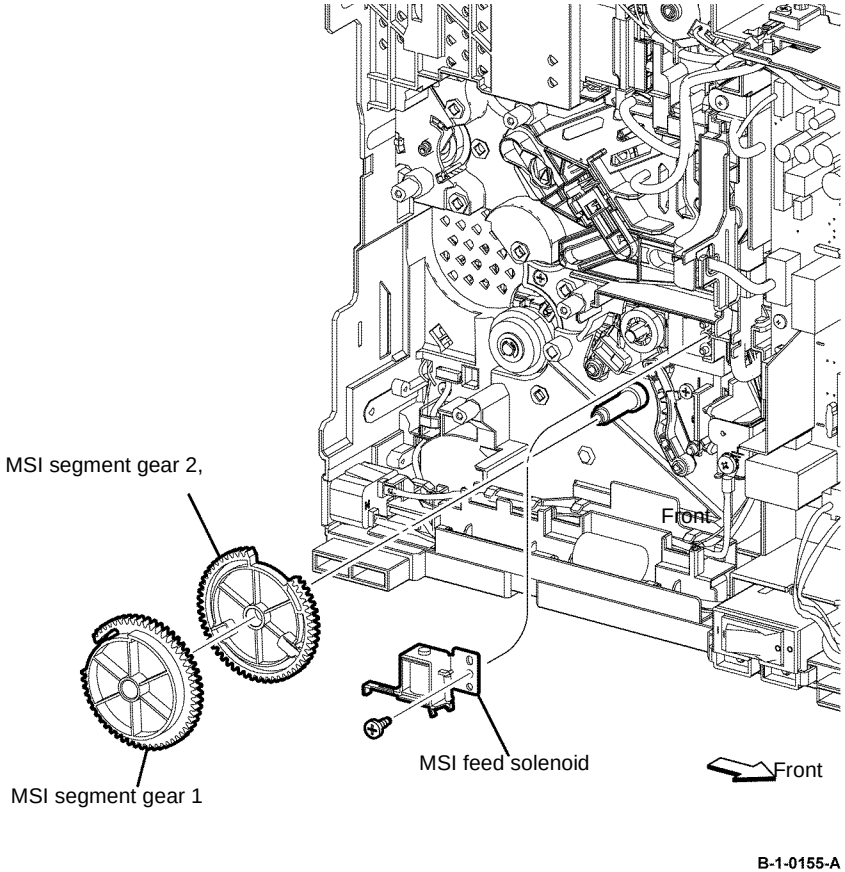

Figure 2 MSI feed solenoid, segment and MSI feed gears removal

21. Remove one screw (silver, tapping, 8mm), then remove the MSI feed solenoid, Figure 2.
22. Remove the MSI segment gear 1, MSI segment gear 2 and MSI feed gear, Figure 2.
23. Release the MSI feed spring from the MSI lifter arm, then remove the MSI lifter arm and MSI lifter stopper, Figure 3.

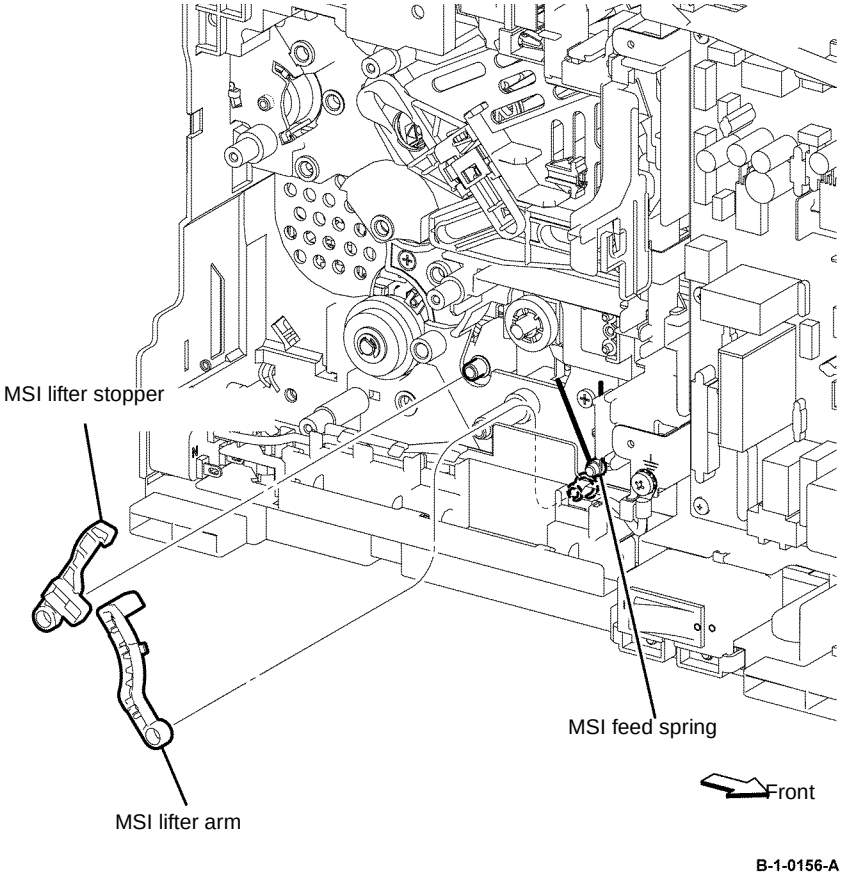

Figure 3 MSI lifter arm and lifter stopper removal

24. Release the hook, then remove the registration shutter sensor, Figure 4.

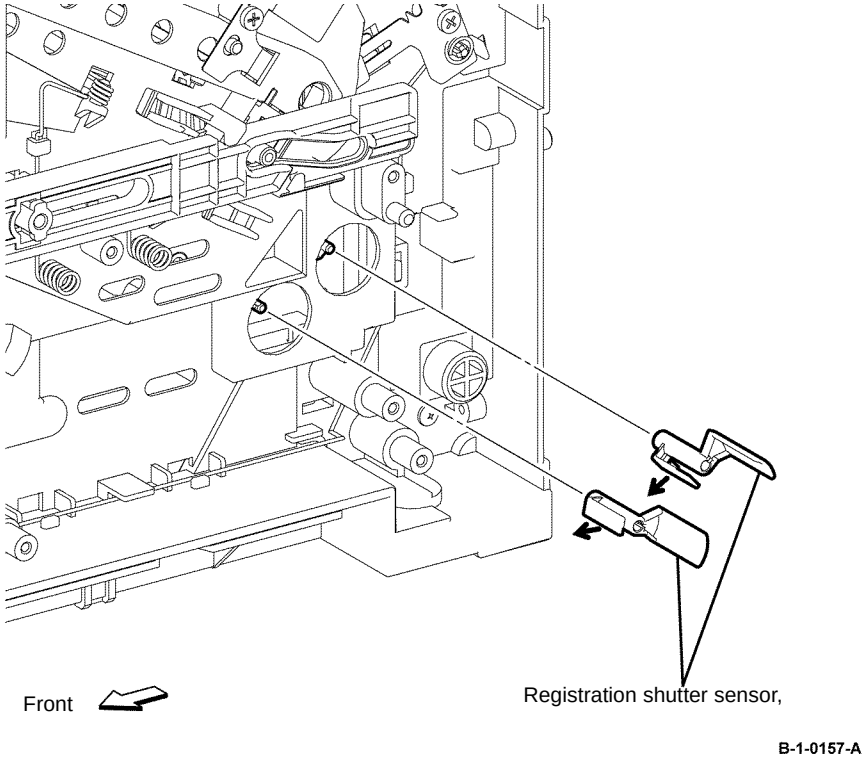

Figure 4 Registration shutter sensor removal

25. Release one screw (silver, tapping, 8mm), then remove the registration out earth plate, Figure 5.

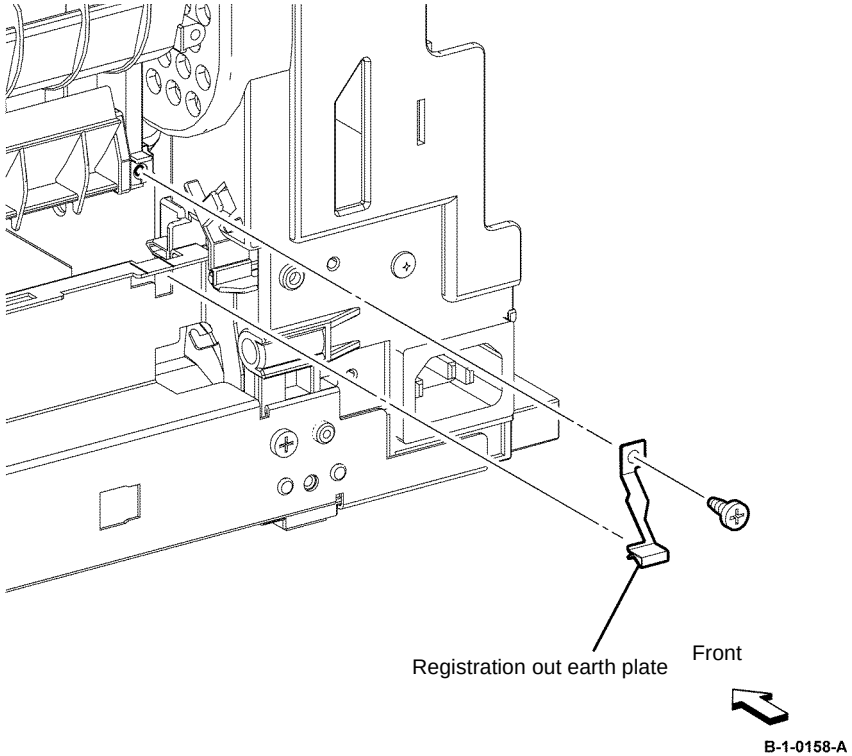

Figure 5 Registration out earth plate removal

26. Remove three screws (silver, tapping, 8mm), then remove the registration transport assembly from the printer, Figure 6.

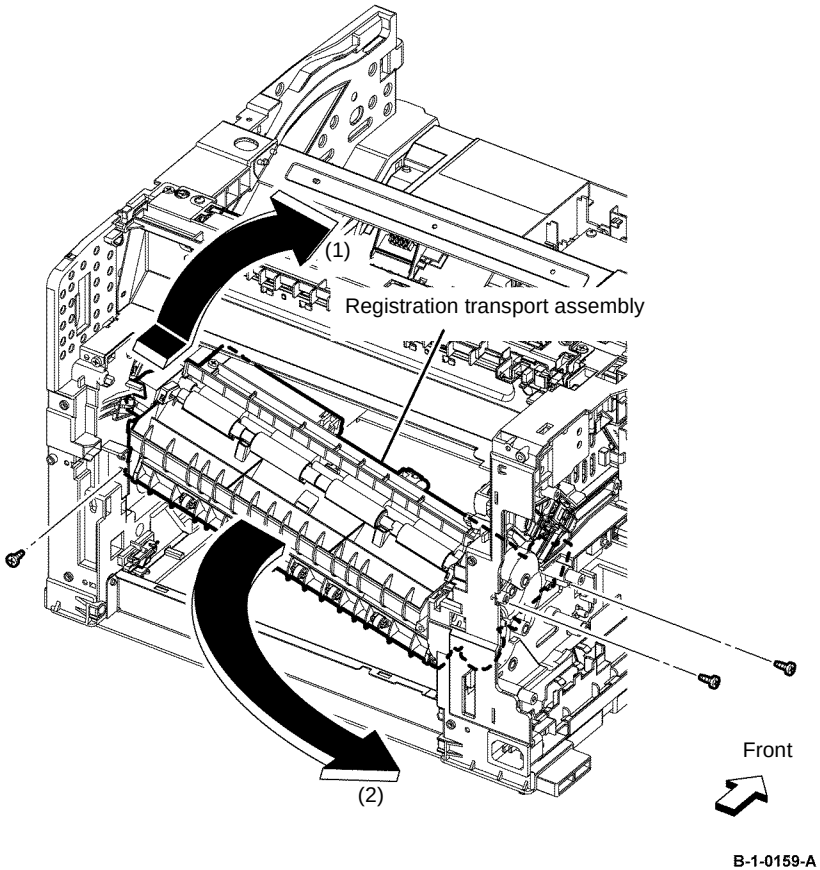

Figure 6 Registration transport assembly removal

Replacement

1. The replacement is the reverse of the removal procedure.
2. When installing the registration transport assembly, ensure the position of the boss and the registration shutter sensor is correct, Figure 7.

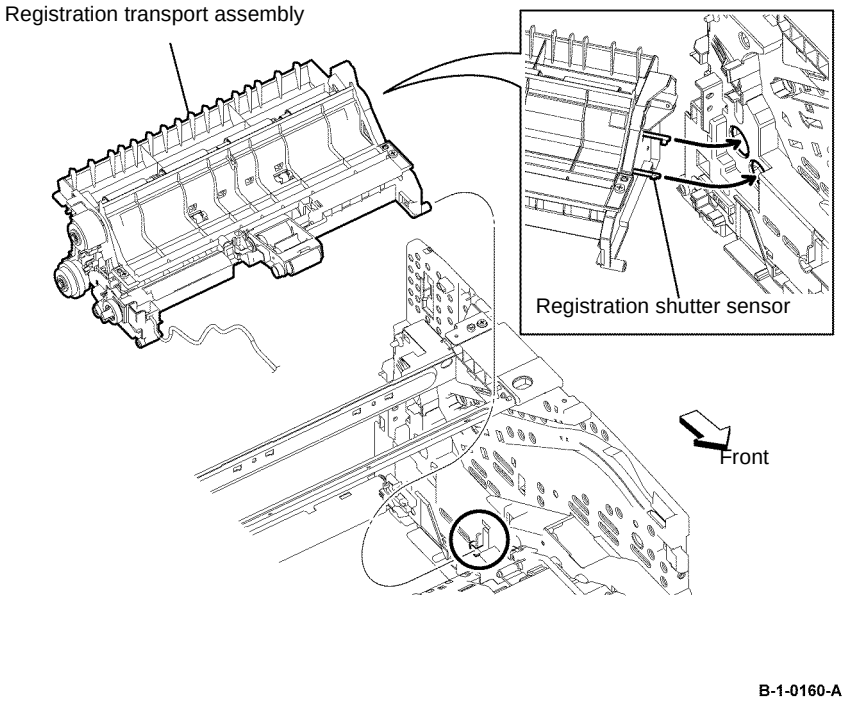

Figure 7 Registration transport assembly installation

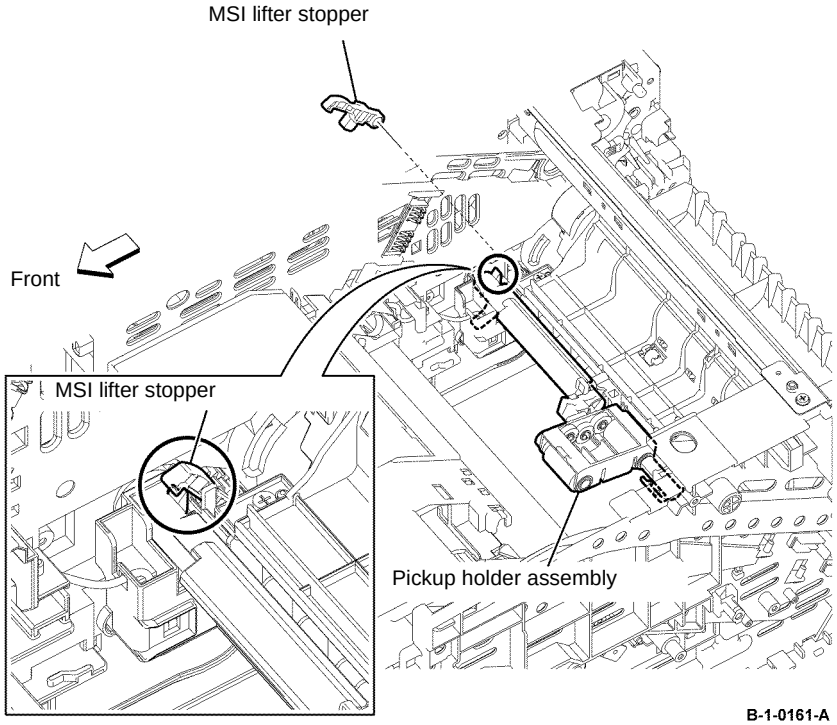

Figure 8 MSI lifter stopper installation

3. When installing the MSI lifter stopper, ensure the pickup holder assembly, is in the position shown, Figure 8.

4. When installing the MSI lifter arm., ensure the MSI feed spring is correctly positioned, Figure 9.

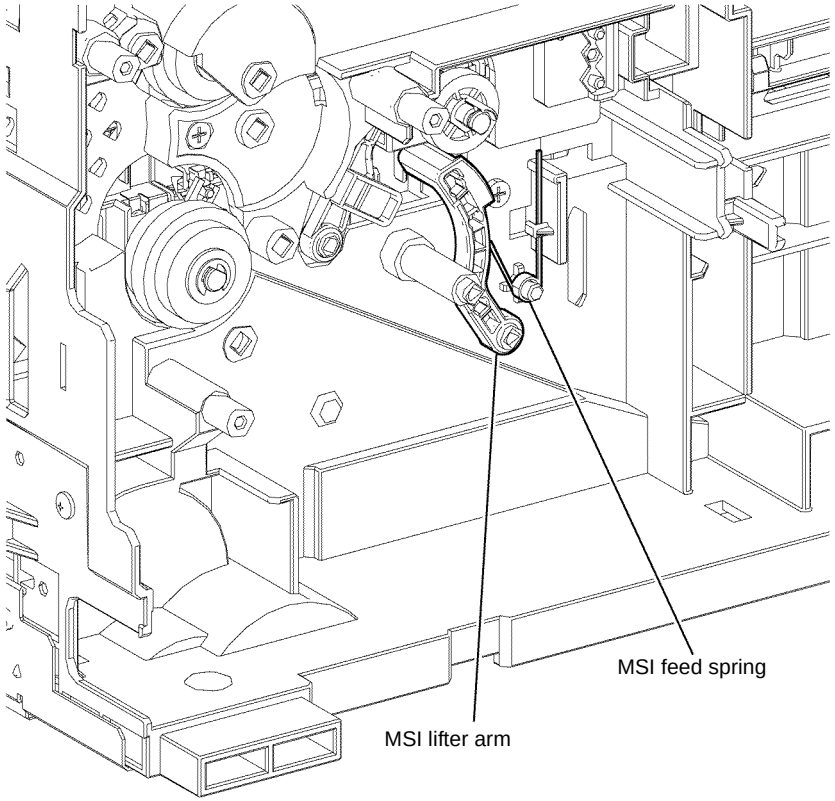

Figure 9 MSI lifter arm installation

5. When installing the MSI segment gear 1 and MSI segment gear 2, fit the bosses on the MSI segment gear 1 into the holes on the MSI segment gear 2, Figure 10.

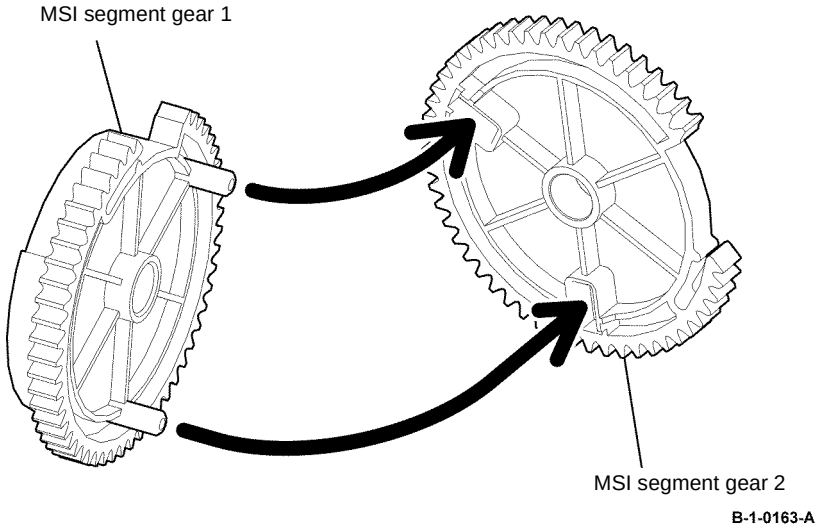

Figure 10 MSI segment gear 1 and 2 installation

6. When installing the MSI segment gear 1 and MSI segment gear 2, ensure that the actuator is the position shown, Figure 11.

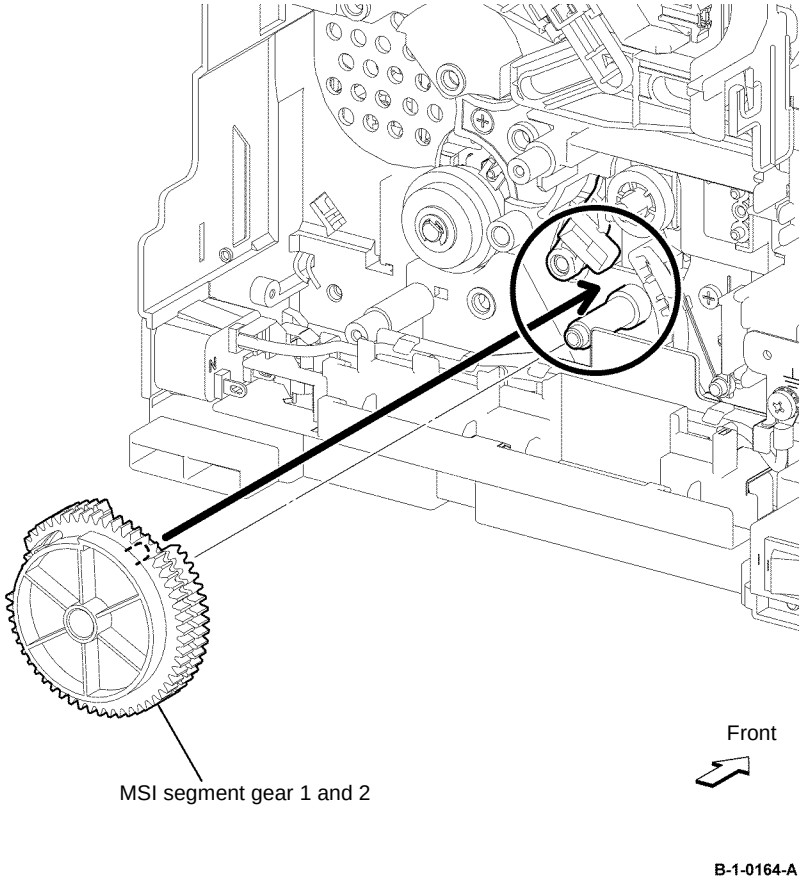

Figure 11 MSI segment gear 1 and 2 actuator position

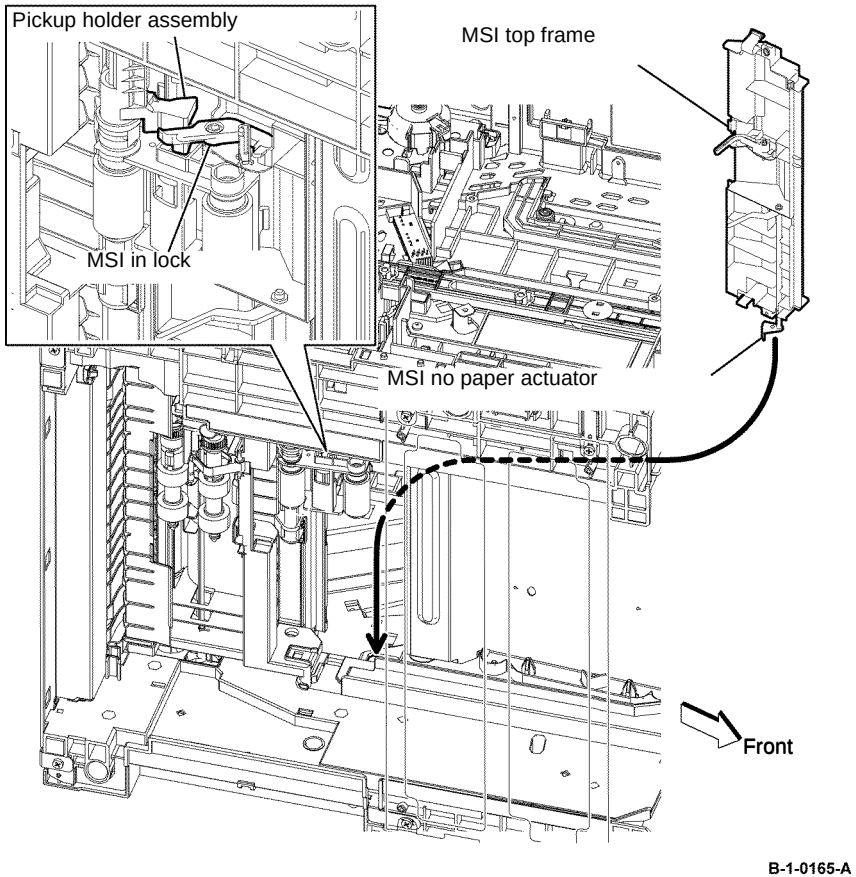

Figure 12 MSI top frame installation

7. When installing the MSI top frame, ensure the MSI no paper actuator coupled with the MSI top frame, fits into the hole on the printer, Figure 12.

REP 15.3 Rear Interlock Switch Assembly B405

Parts List on PL 15.1B

Removal

WARNING

Switch off the electricity to the machine, GP 10. Disconnect the power cord from the customer supply while performing tasks that do not need electricity. Electricity can cause death or injury. Moving parts can cause injury.

WARNING

Take care during this procedure. Sharp edges may be present that can cause injury.

1. Open the MSI cover, PL 13.2 Item 99.
2. Pull out the MSI tray assembly, PL 13.2 Item 9.
3. Remove the front cover assembly, REP 19.1.
4. Remove the rear cover assembly, REP 19.13.
5. Remove the ESS window cover assembly, REP 19.3.
6. Remove the WIFI cap cover, REP 19.19.
7. Remove the left cover, REP 19.11.
8. Remove the ESS PWB, REP 18.1.
9. Release six screws (silver, M3, 6mm), then remove the ESS housing, Figure 1.

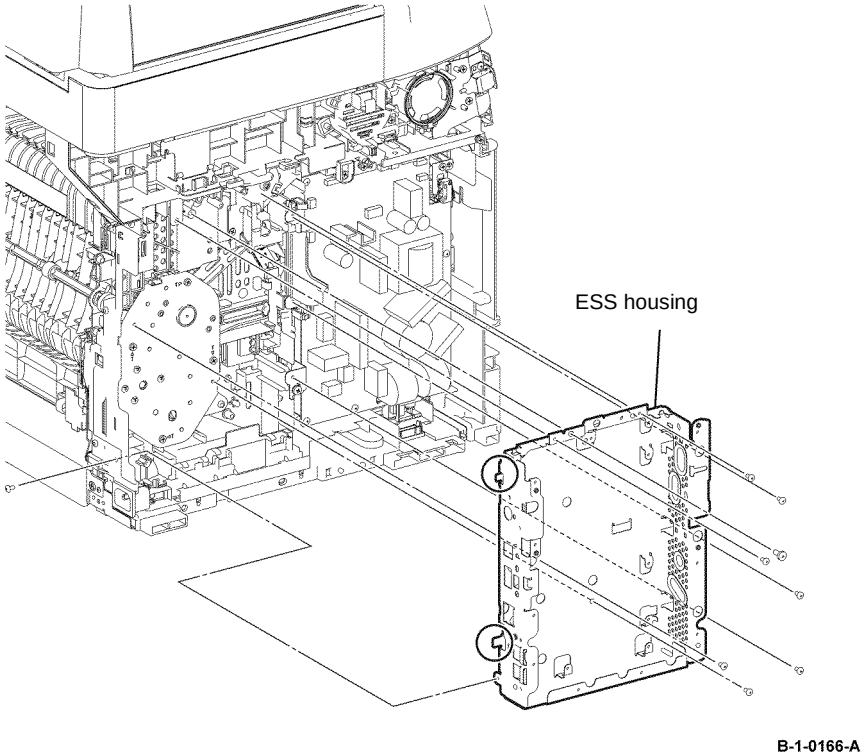

Figure 1 ESS housing removal

10. Disconnect P/J201 from the LVPS PWB, then move the harness guide, Figure 2.

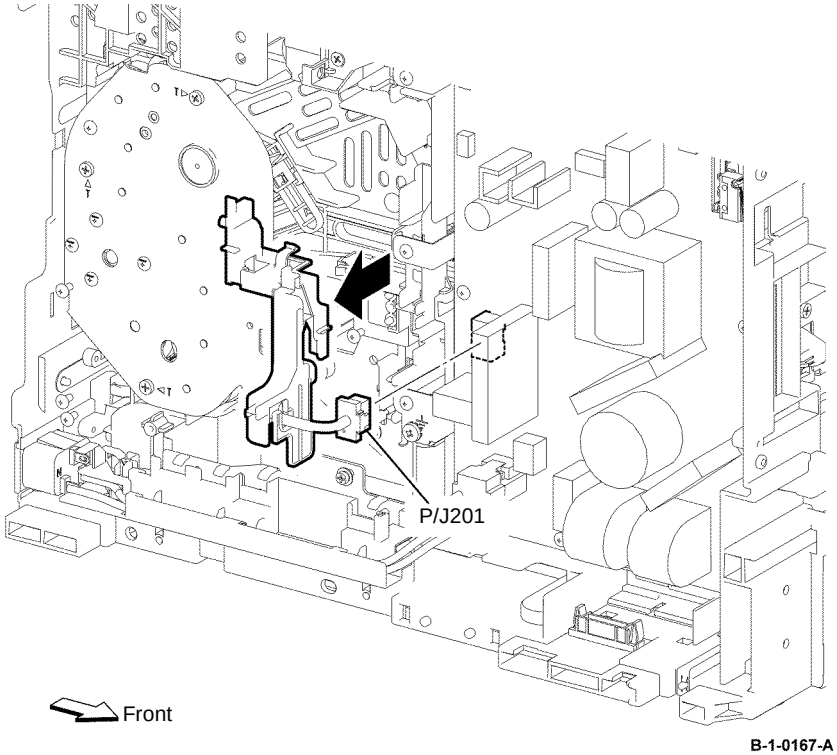

Figure 2 P/J201 disconnection

11. Disconnect P/J230 from the LVPS PWB, release the harness from the harness guide fixed on the printer, then pull the harness out of the hole on the printer.
12. Remove one screw (silver, tapping, 8mm) that fixes the rear interlock switch assembly. Release the two hooks, then remove the rear interlock switch assembly by releasing the boss on the registration out roll assembly from the hole, Figure 3.

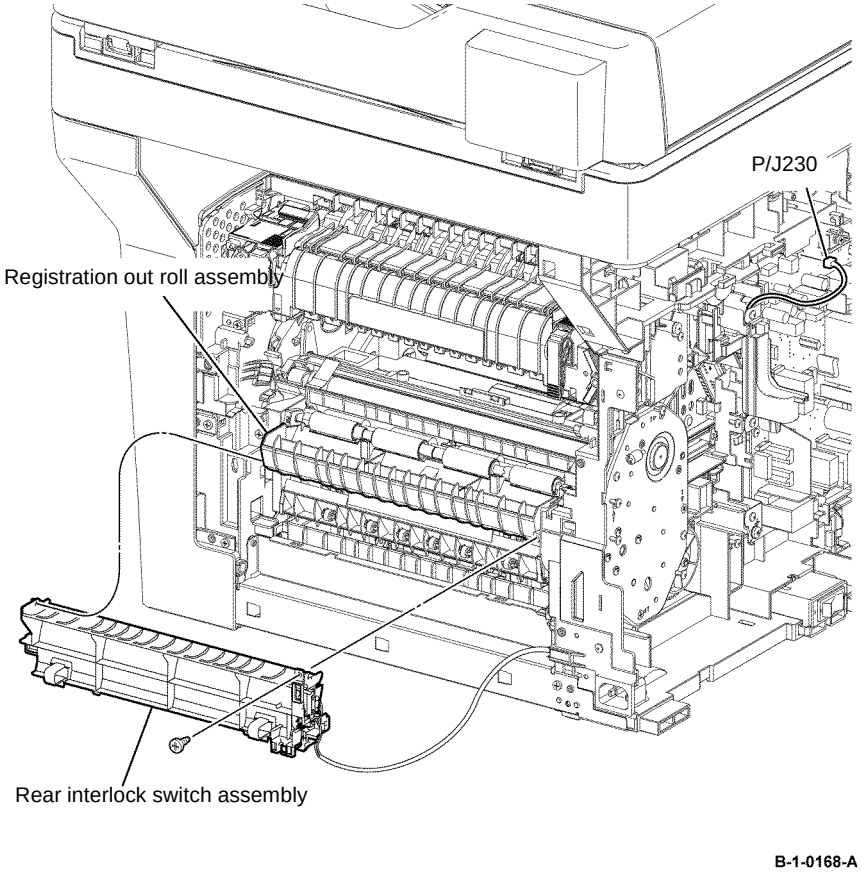

Figure 3 Rear interlock switch assembly removal

13. Remove the interlock harness assembly from the rear interlock switch assembly, Figure 4.

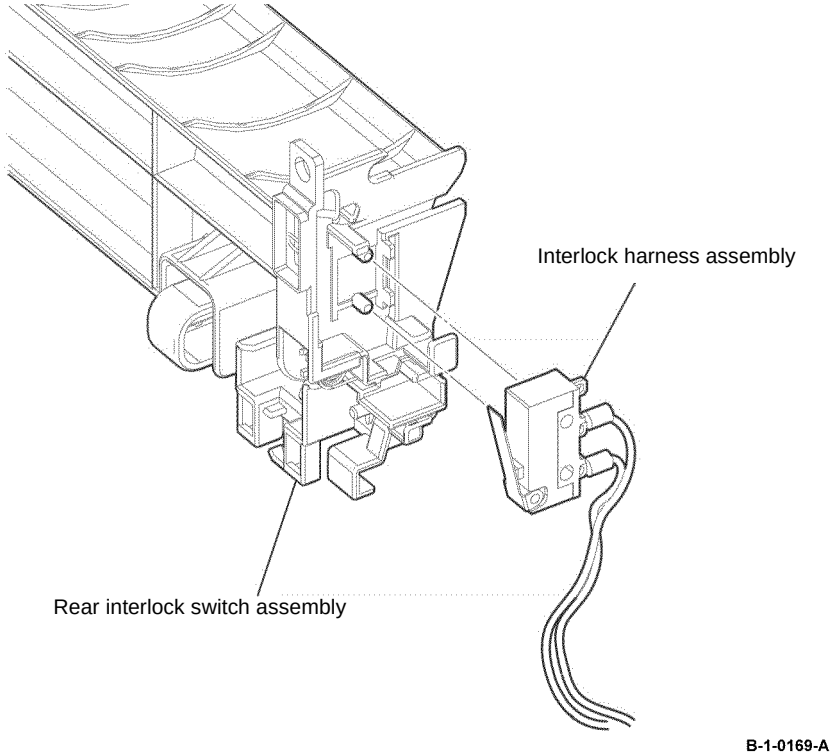

Figure 4 Interlock harness assembly removal

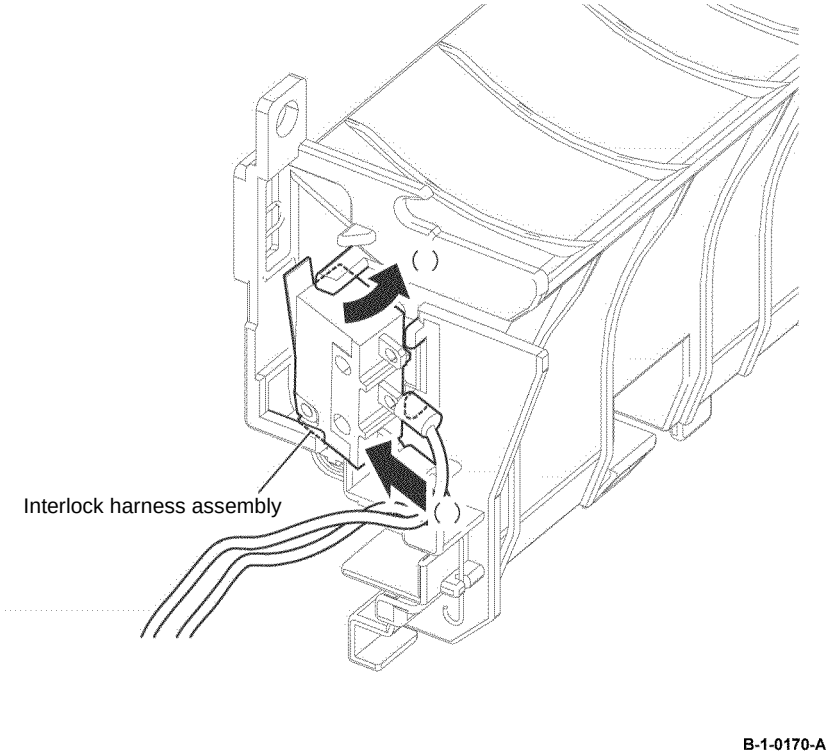

Figure 5 Interlock harness assembly installation

Replacement

1. The replacement is the reverse of the removal procedure.
2. Install the interlock harness assembly to the rear interlock switch assembly as shown in Figure 5.

REP 15.4 Rear Interlock Switch Assembly B400

Parts List on PL 15.1A

Removal

WARNING

Switch off the electricity to the machine, GP 10. Disconnect the power cord from the customer supply while performing tasks that do not need electricity. Electricity can cause death or injury. Moving parts can cause injury.

WARNING

Take care during this procedure. Sharp edges may be present that can cause injury.

1. Open the MSI cover, PL 13.2 Item 99.
2. Pull out the MSI tray assembly, PL 13.2 Item 9.
3. Remove the option tray assembly, PL 9.2 Item 1.
4. Remove the front cover assembly, REP 19.2.
5. Remove the drum Cartridge. REP 8.2.
6. Remove the rear cover assembly, REP 19.14.
7. Remove the UI console assembly, REP 1.3.
8. Remove the exit top cover assembly, REP 19.10.
9. Remove the WIFI cap cover, REP 19.20.
10. Remove the ESS window cover assembly, REP 19.4.
11. Remove the front/left UI cover assembly, REP 1.4.
12. Remove the left cover, REP 19.12.
13. Remove the ESS PWB, REP 18.2.
14. Remove six screws (silver, M3, 6mm) and one screw (silver, tapping, M4, 10mm). Release the two tabs from the frame, then remove the ESS housing, Figure 1.

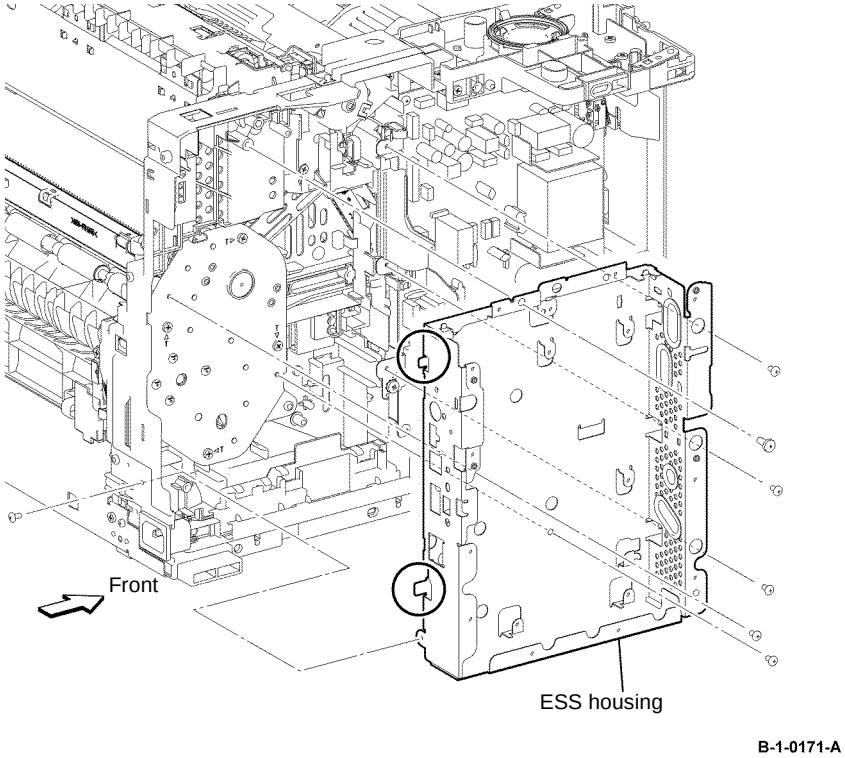

Figure 1 ESS housing removal

15. Disconnect PJ201 from the LVPS PWB, then move the harness guide, Figure 2.

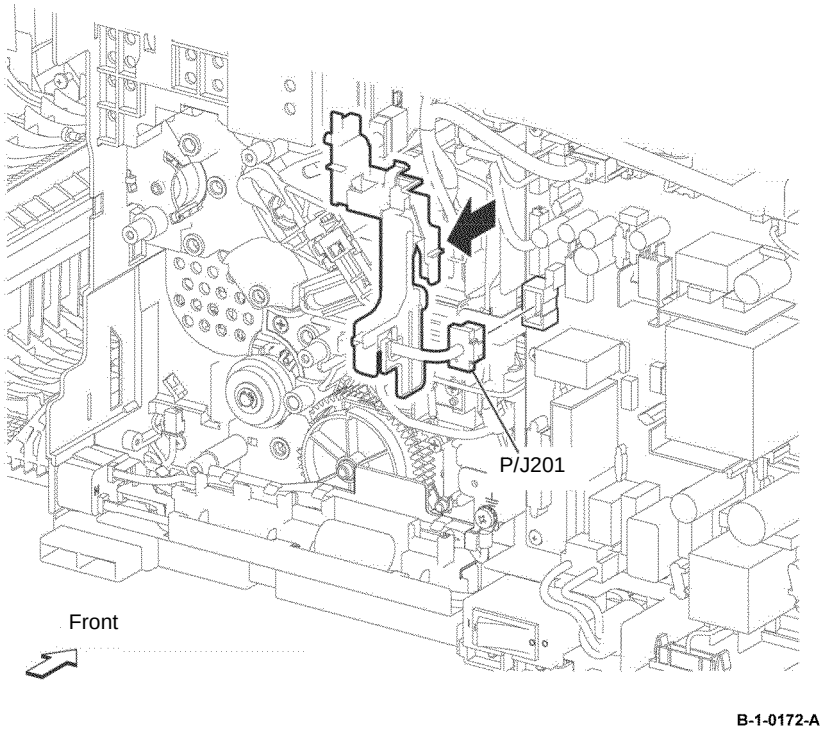

Figure 2 P/J201 disconnection

16. Disconnect PJ230 from the LVPS PWB. Release the rear interlock switch harness from the harness guide.
17. Remove one screw (silver, tapping, 8mm) that fixes the rear interlock switch assembly. Release the two hooks, then remove the rear interlock switch assembly by rotating it along the axis between the bosses, Figure 3.

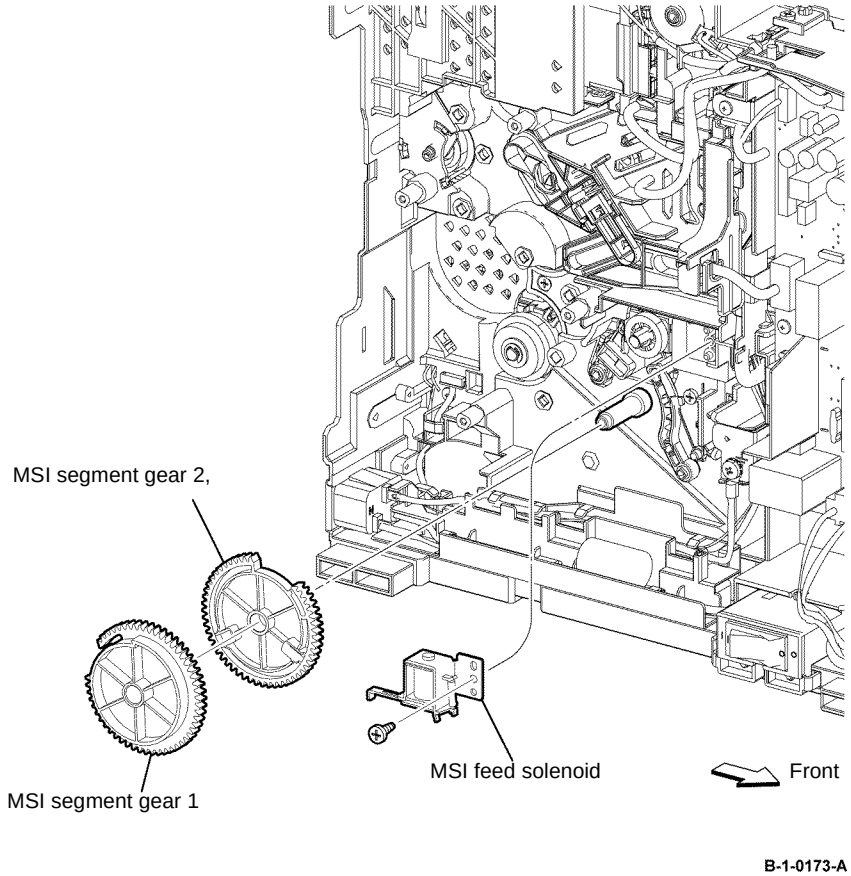

Figure 3 Rear interlock switch assembly removal

18. Remove the interlock harness assembly from the rear interlock switch assembly, Figure 4.

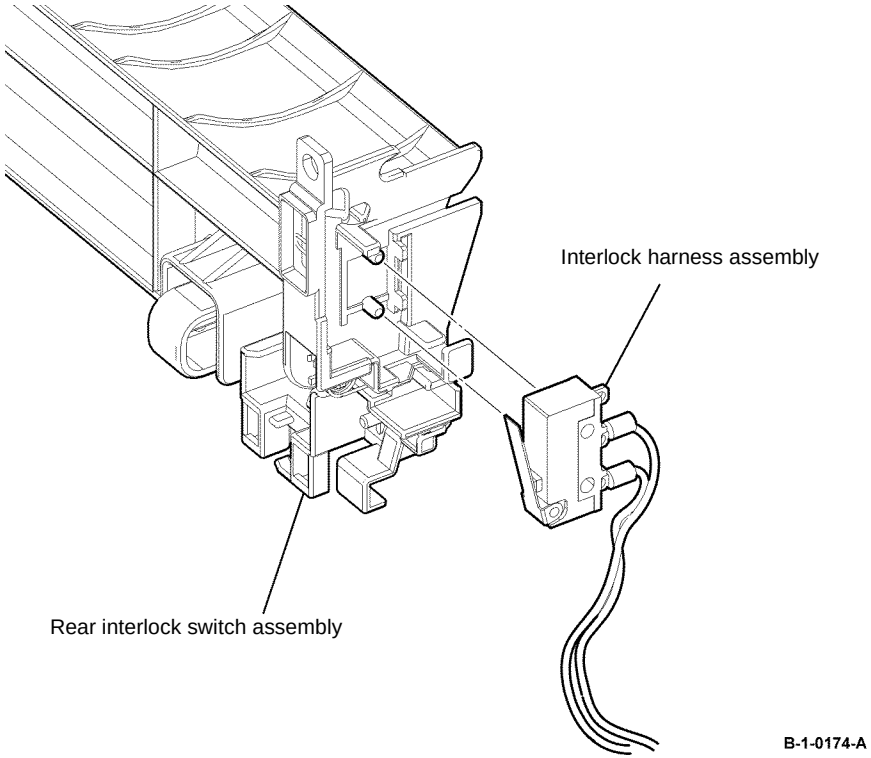

Figure 4 Interlock harness assembly removal

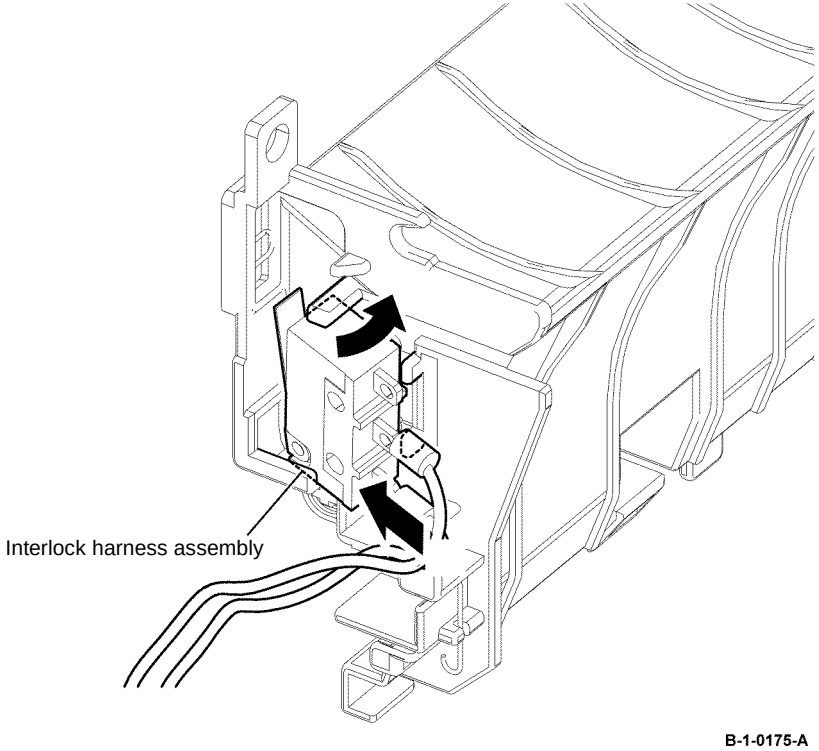

Figure 5 Interlock harness assembly installation

Replacement

1. The replacement is the reverse of the removal procedure.
2. Install the interlock harness assembly to the rear interlock switch assembly as shown in Figure 5.

REP 15.5 Feed Roll Assembly B405

Parts List on PL 15.3

Removal

WARNING

Switch off the electricity to the machine, GP 10. Disconnect the power cord from the customer supply while performing tasks that do not need electricity. Electricity can cause death or injury. Moving parts can cause injury.

1. Open the MSI cover, PL 13.2 Item 99.
2. Pull out the MSI tray assembly, PL 13.2 Item 9.
3. Remove the drum cartridge, REP 8.1.
4. Place the printer right side up.
5. Remove the feed roll assembly from the bottom of the printer by releasing the hook, Figure 1.

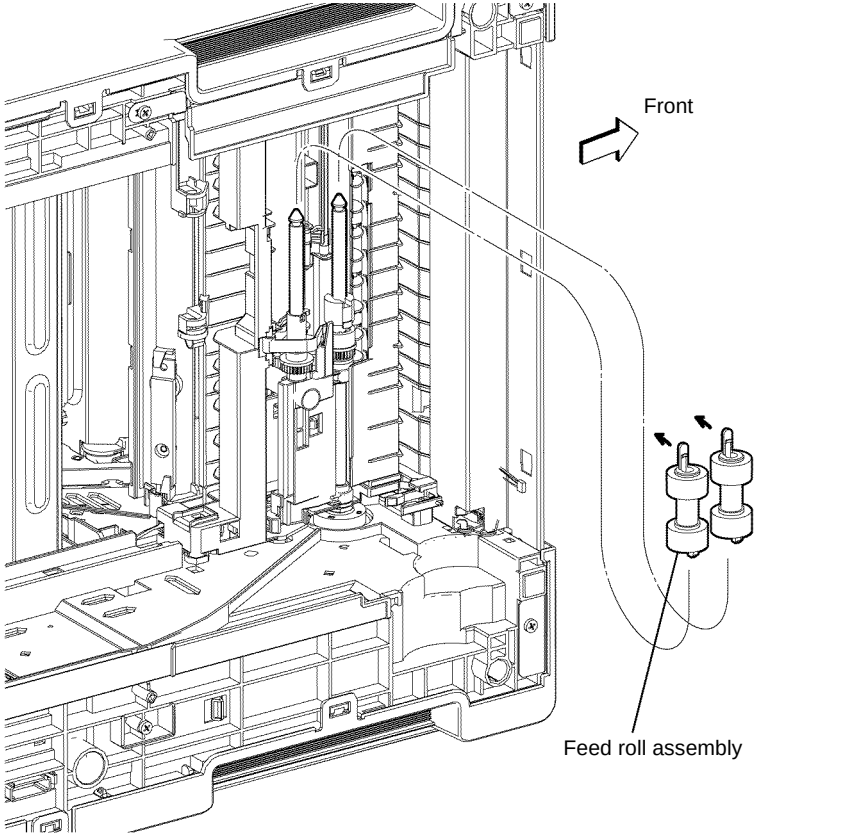

Figure 1 Feed roll assembly removal

Replacement

The replacement is the reverse of the removal procedure.

REP 15.6 Feed Roll Assembly B400

Parts List on PL 15.3

Removal

WARNING

Switch off the electricity to the machine, GP 10. Disconnect the power cord from the customer supply while performing tasks that do not need electricity. Electricity can cause death or injury. Moving parts can cause injury.

1. Open the MSI cover, PL 13.2 Item 99.
2. Pull out the MSI tray assembly, PL 13.2 Item 9.
3. Remove the drum cartridge, REP 8.2.
4. Place the printer right side up.
5. Remove the feed roll assembly from the bottom of the printer by releasing the hook, Figure 1.

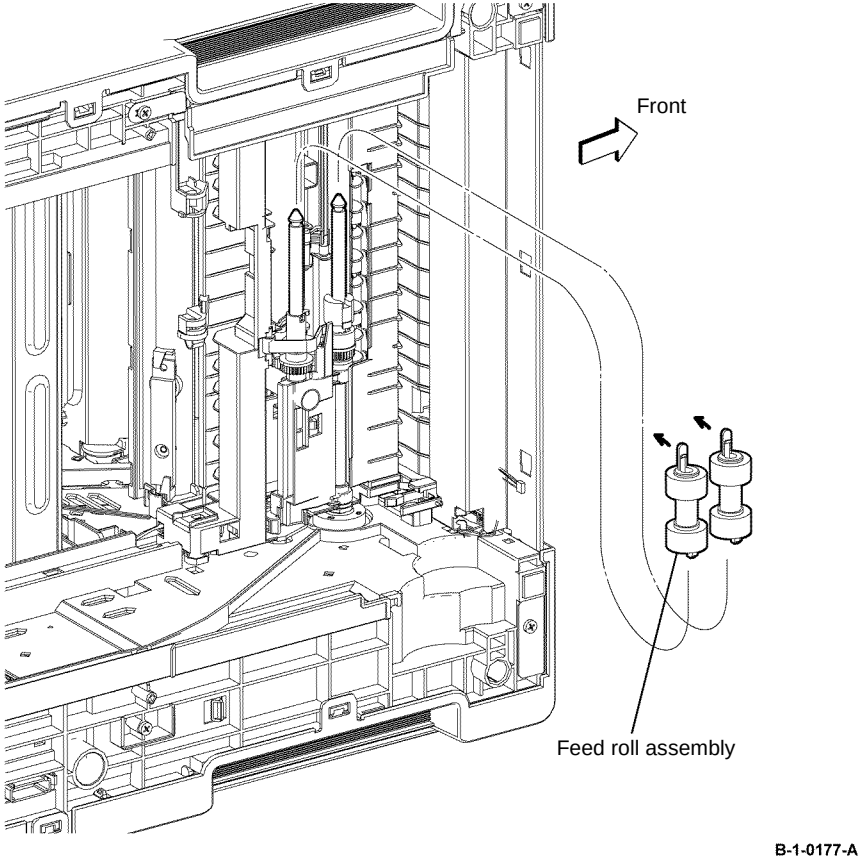

Figure 1 Feed roll assembly removal

Replacement

The replacement is the reverse of the removal procedure.

REP 15.7 Feeder Assembly B405

Parts List on PL 15.3

Removal

WARNING

Switch off the electricity to the machine, GP 10. Disconnect the power cord from the customer supply while performing tasks that do not need electricity. Electricity can cause death or injury. Moving parts can cause injury.

1. Open the MSI cover, PL 13.2 Item 99.
2. Pull out the MSI tray assembly, PL 13.2 Item 9.
3. Remove the front cover assembly, REP 19.1.
4. Remove the rear cover assembly, REP 19.13.
5. Remove the ESS window cover assembly, REP 19.3.
6. Remove the WIFI cap cover, REP 19.19.
7. Remove the left cover, REP 19.11.
8. Remove the right cover, REP 19.7.
9. Remove the ESS PWB, REP 18.1.
10. Remove the fuser unit, REP 7.1.
11. Remove the option tray assembly, PL 9.2 Item 1.
12. Remove the main drive assembly, REP 3.1.
13. Remove the HVPS, REP 18.5.
14. Remove the rear interlock switch assembly, REP 15.3.
15. Remove the registration transport assembly, REP 15.1.
16. Remove the feed roll assembly, REP 15.5.
17. Turn the registration transport assembly upside down, remove the E-ring that fixes the tray feed clutch, then remove the tray feed clutch and nudger bearing, Figure 1.
18. Remove the feed gear, one-way feed clutch, feed shaft assembly and nudger bearing, Figure 1.
19. Remove the feeder assembly, Figure 1.

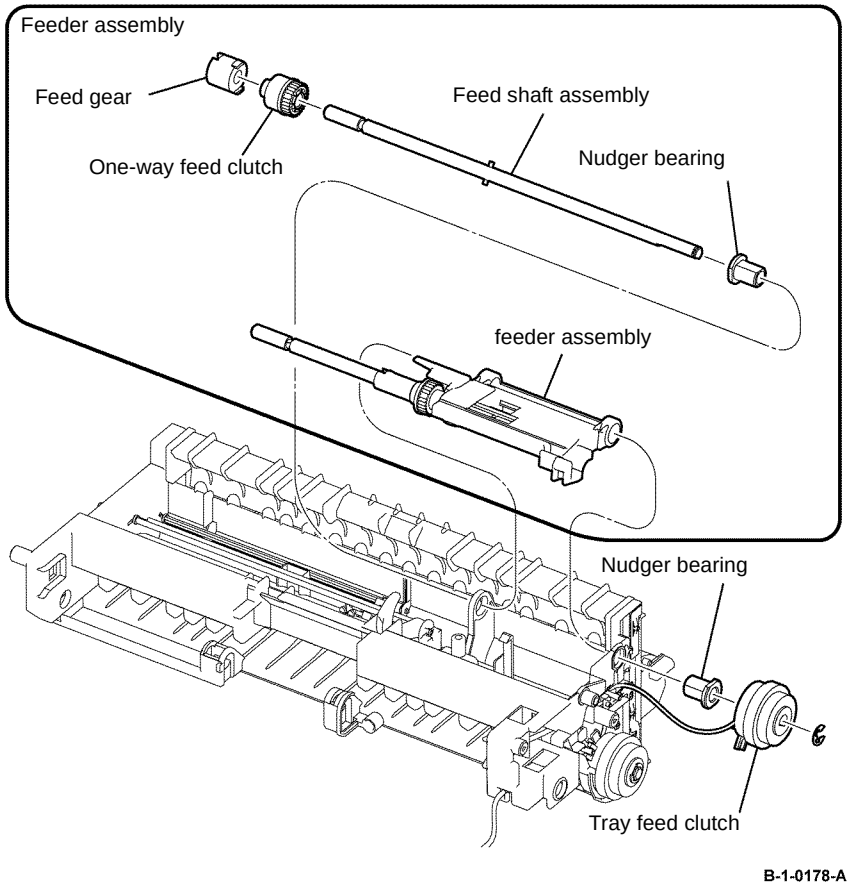

Figure 1 Feeder assembly removal

Replacement

1. The replacement is the reverse of the removal procedure.
2. When installing the feeder assembly, ensure that the no paper tray actuator, is positioned as shown in Figure 2.

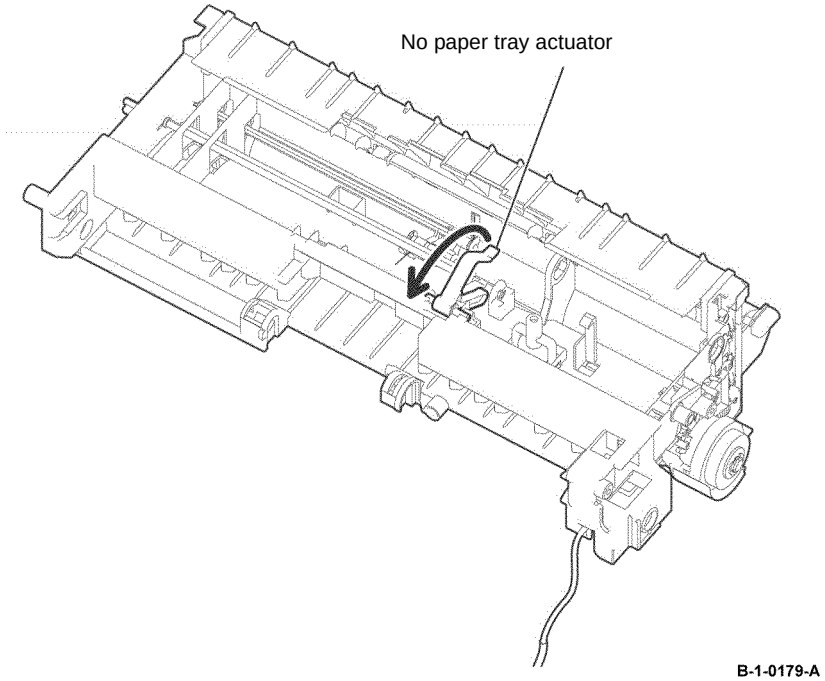

Figure 2 Feeder assembly installation

REP 15.8 Feeder Assembly B400

Parts List on PL 15.3

Removal

WARNING

Switch off the electricity to the machine, GP 10. Disconnect the power cord from the customer supply while performing tasks that do not need electricity. Electricity can cause death or injury. Moving parts can cause injury.

1. Open the MSI cover, PL 13.2 Item 99.
2. Pull out the MSI tray assembly, PL 13.2 Item 9.
3. Remove the front cover assembly, REP 19.2.
4. Remove the drum Cartridge. REP 8.2.
5. Remove the rear cover assembly, REP 19.14.
6. Remove the UI console assembly, REP 1.3.
7. Remove the exit top cover assembly, REP 19.10.
8. Remove the WIFI cap cover, REP 19.20.
9. Remove the ESS window cover assembly, REP 19.4.
10. Remove the left cover, REP 19.12.
11. Remove the right cover, REP 19.8.
12. Remove the ESS PWB, REP 18.2.
13. Remove the fuser, REP 7.2.
14. Remove the main drive assembly, REP 3.2.
15. Remove the HVPS, REP 18.6.
16. Remove the rear interlock switch assembly, REP 15.4.
17. Remove the registration transport assembly, REP 15.2.
18. Remove the feed roll assembly, REP 15.6.
19. Turn the registration transport assembly upside down, remove the E-ring that fixes the tray feed clutch. Remove the tray feed clutch and nudger bearing, Figure 1
20. Remove the feed gear, one-way feed clutch, feed shaft assembly, and nudger bearing, Figure 1.
21. Remove the feeder assembly, Figure 1.

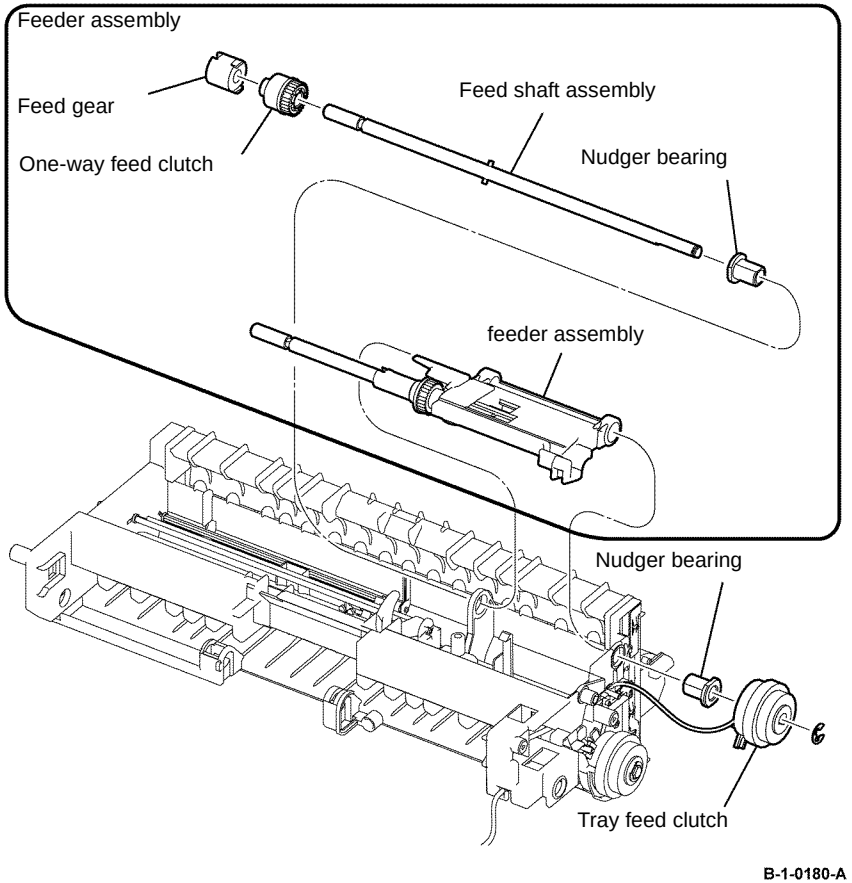

Figure 1 Feeder assembly removal

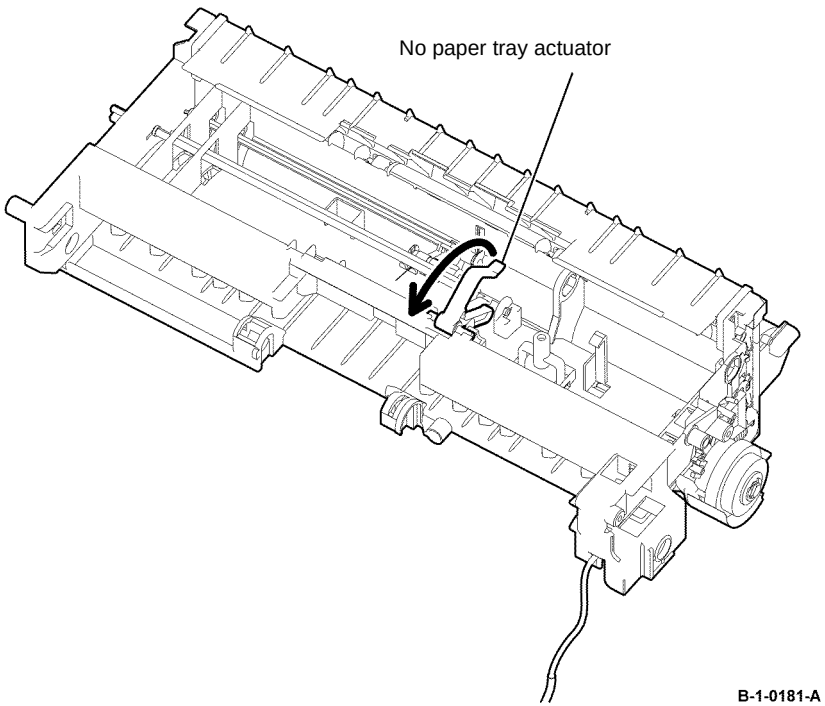

Figure 2 Feeder assembly installation

Replacement

1. The replacement is the reverse of the removal procedure.
2. When installing the feeder assembly, ensure that the no paper tray actuator, is positioned as shown in Figure 2.

REP 15.9 Rubber Roll Assembly, Registration Clutch B405

Parts List on PL 15.2

Removal

WARNING

Switch off the electricity to the machine, GP 10. Disconnect the power cord from the customer supply while performing tasks that do not need electricity. Electricity can cause death or injury. Moving parts can cause injury.

1. Remove the registration transport assembly, REP 15.1.
2. Remove the pick up flange, then remove the pickup holder assembly, Figure 1.

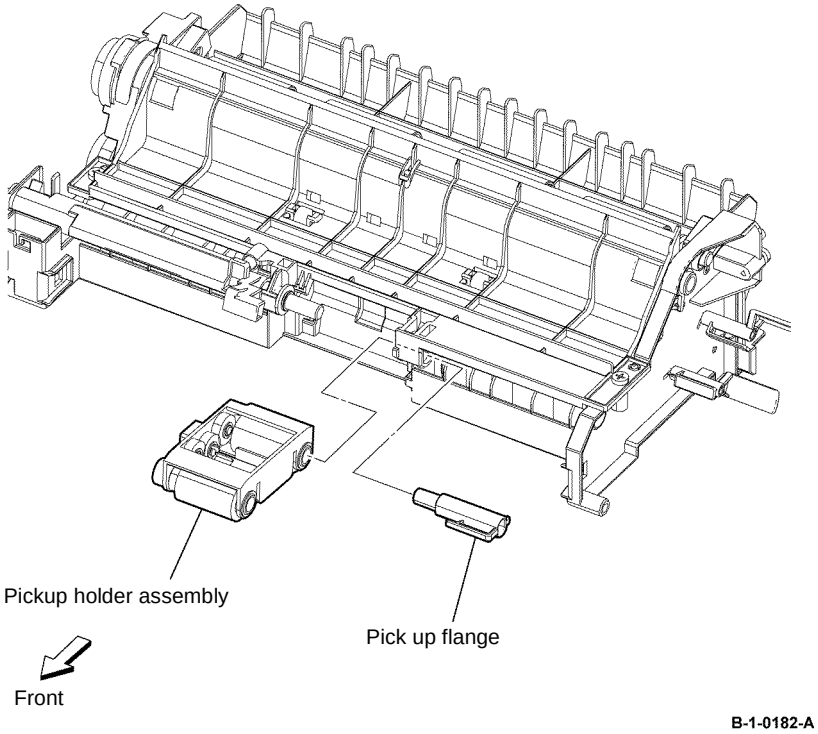

Figure 1 Pickup holder assembly removal

3. Remove the registration spring and MSI feed bearing. Remove the MSI feed shaft and MSI lifter lever, Figure 2.

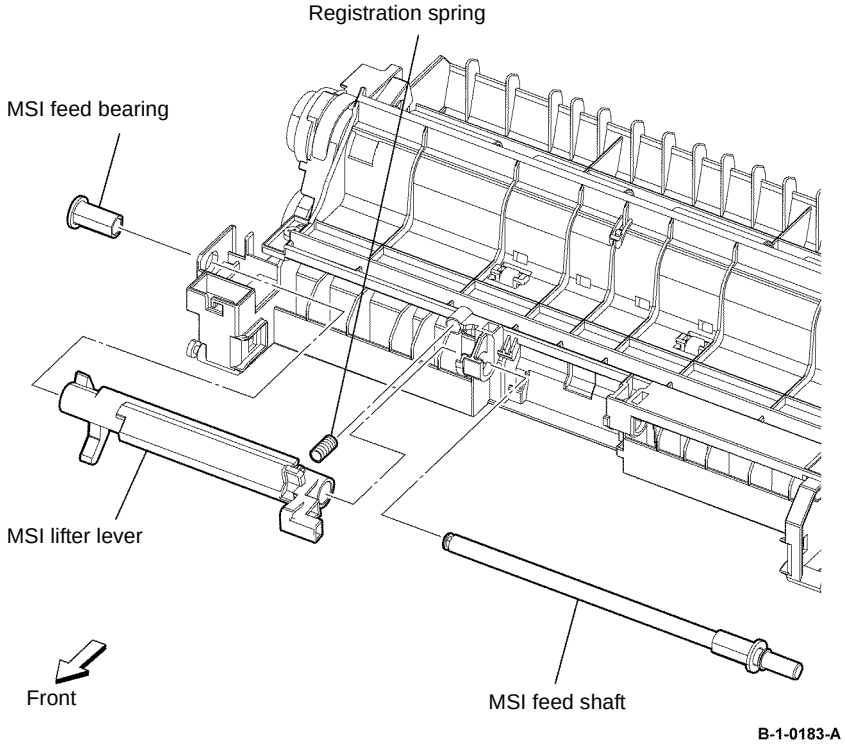

Figure 2 MSI spring, feed bearing, lifter lever and feed shaft removal

4. Remove two screws (silver, tapping, 8mm), then remove the registration in chute by opening the both side frames, Figure 3.

NOTE: *Retain the registration bearing cartridge.*

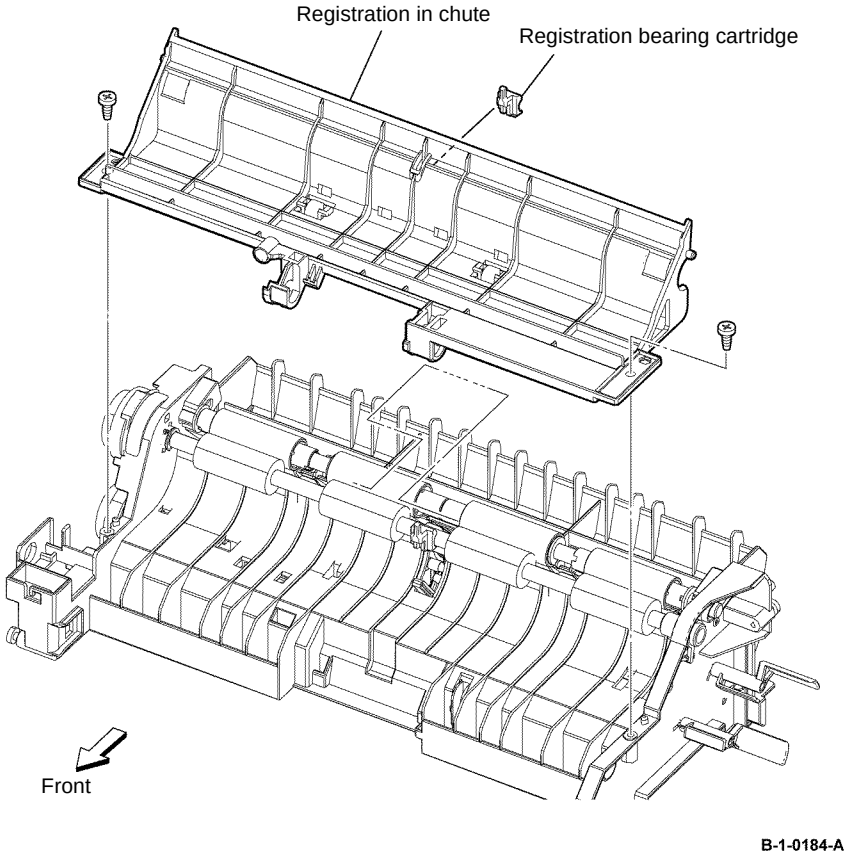

Figure 3 Registration in chute removal

5. Remove the E-ring, then remove the registration clutch, Figure 4.
6. Remove the right registration bearing and the registration earth bearing, by rotating clockwise, Figure 4.
7. Remove the E-ring, then remove the rubber roll assembly, Figure 4.

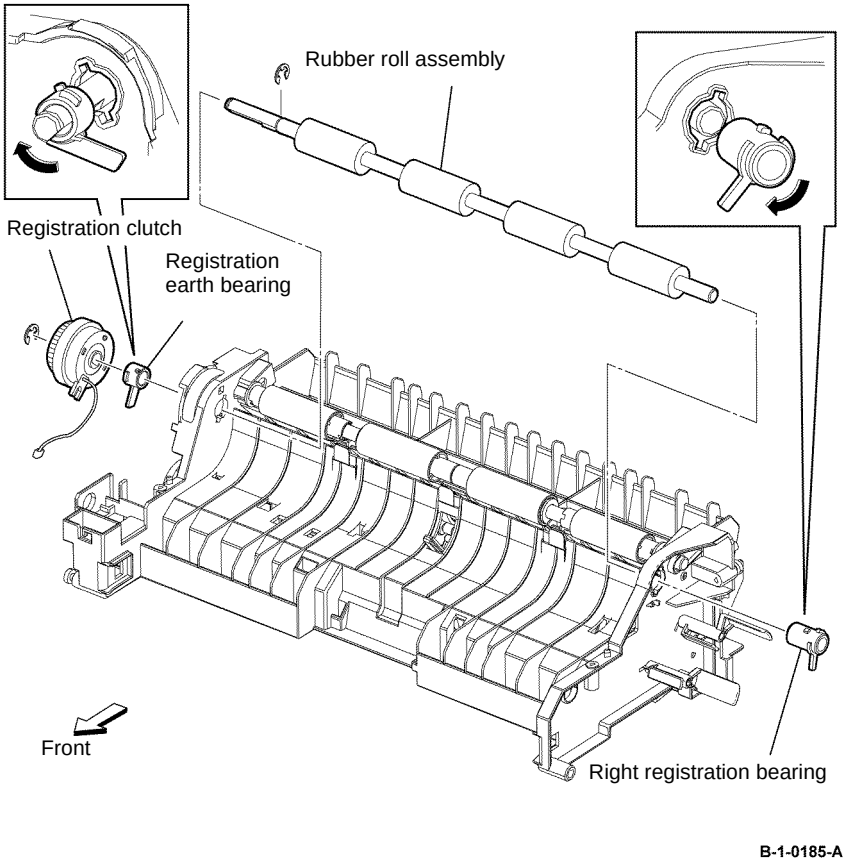

Figure 4 Registration clutch and rubber roll assembly removal

Replacement

1. The replacement is the reverse of the removal procedure.
2. When installing the registration clutch, fit the tab with the stopper of the registration transport assembly, then route the harness of the registration clutch into the hooks, Figure 5.

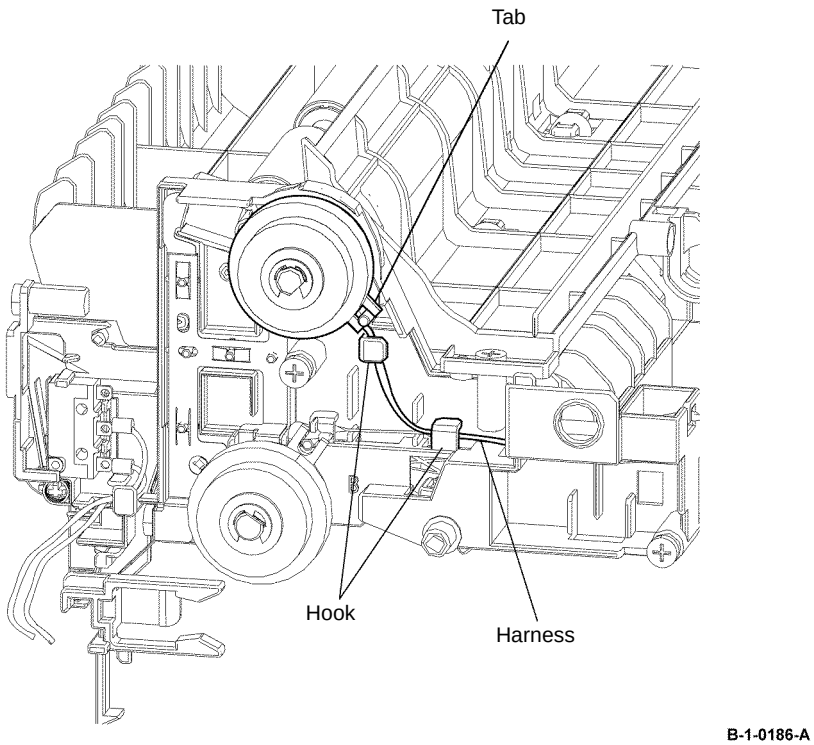

Figure 5 Registration clutch installation

REP 15.10 Rubber Roll Assembly, Registration Clutch B400

Parts List on PL 15.2

Removal

WARNING

Switch off the electricity to the machine, GP 10. Disconnect the power cord from the customer supply while performing tasks that do not need electricity. Electricity can cause death or injury. Moving parts can cause injury.

1. Remove the registration transport assembly, REP 15.2.
2. Remove the pick up flange, then remove the pickup holder assembly, Figure 1.

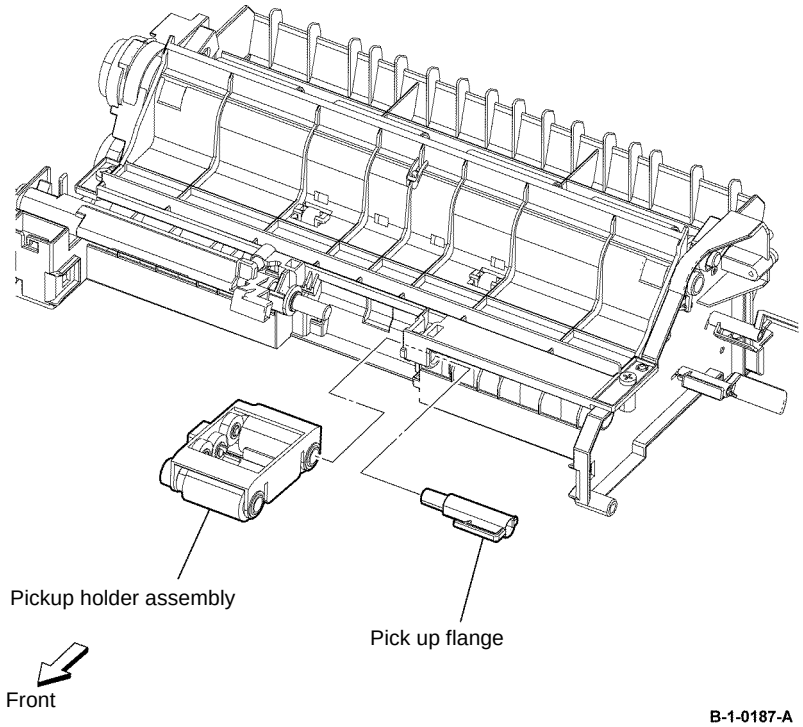

Figure 1 Pickup holder assembly removal

3. Remove the registration spring and MSI feed bearing. Remove the MSI feed shaft and MSI lifter lever, Figure 2.

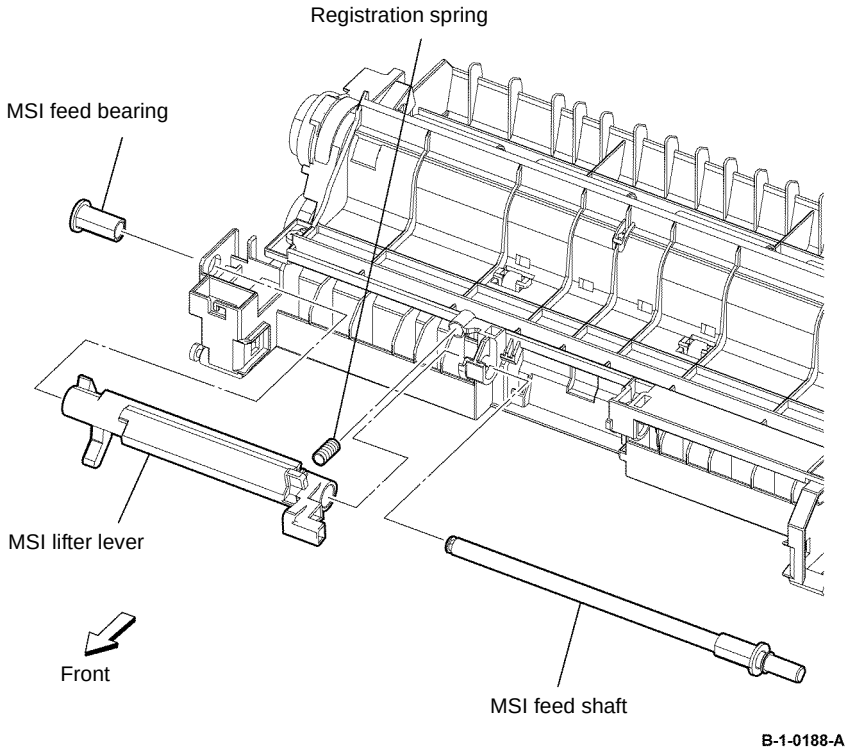

Figure 2 MSI spring, feed bearing, lifter lever and feed shaft removal

4. Remove two screws (silver, tapping, 8mm), then remove the registration in chute, by opening the both side frames, Figure 3.

NOTE: *Retain the registration bearing cartridge.*

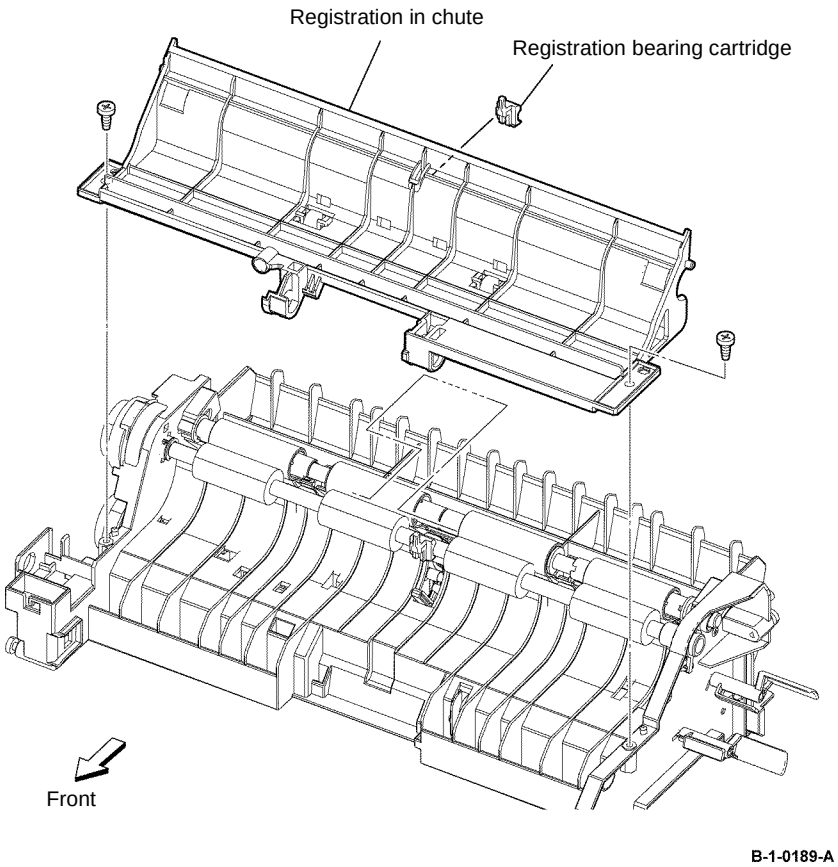

Figure 3 Registration in chute removal

5. Remove the E-ring, then remove the registration clutch, Figure 4.
6. Remove the right registration bearing and the registration earth bearing, by rotating clockwise, Figure 4.
7. Remove the E-ring, then remove the rubber roll assembly, Figure 4.

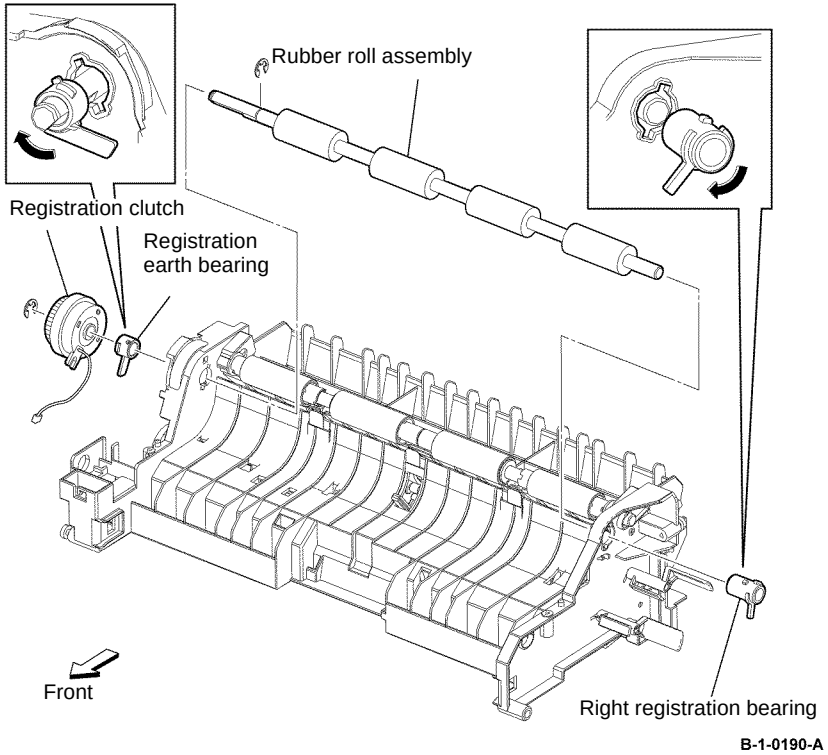

Figure 4 Registration clutch and rubber roll assembly removal

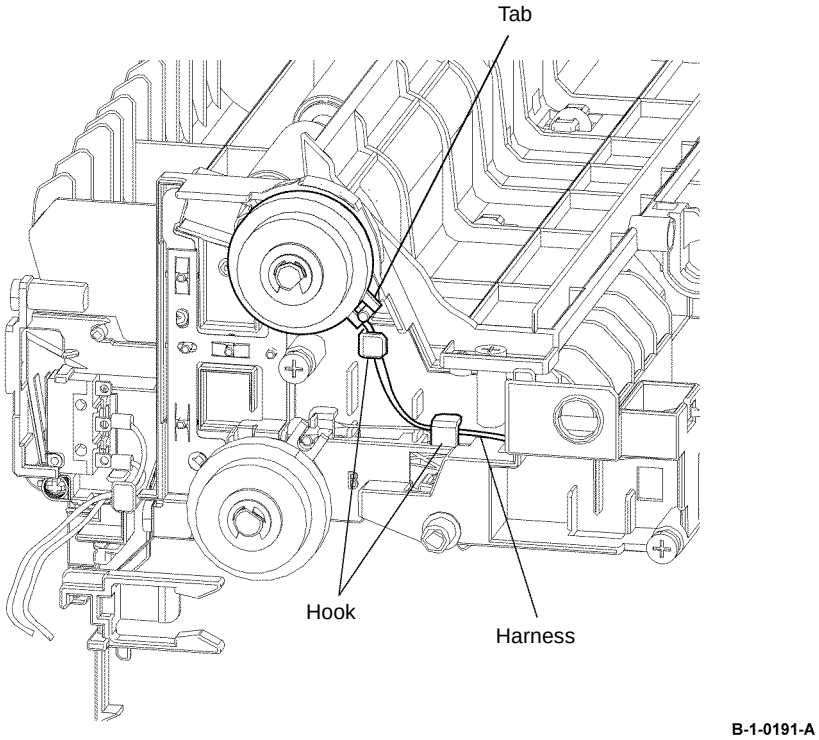

Figure 5 Registration clutch installation

Replacement

1. The replacement is the reverse of the removal procedure.
2. When installing the registration clutch, fit the tab with the stopper of the registration transport assembly, then route the harness of the registration clutch into the hooks, Figure 5.

REP 17.1 Exit Roll Assembly B405

Parts List on PL 17.1

Removal

WARNING

Switch off the electricity to the machine, GP 10. Disconnect the power cord from the customer supply while performing tasks that do not need electricity. Electricity can cause death or injury. Moving parts can cause injury.

1. Open the MSI cover, PL 13.2 Item 99.
2. Pull out the MSI tray assembly, PL 13.2 Item 9.
3. Remove the front cover assembly, REP 19.1.
4. Remove the rear cover assembly, REP 19.13.
5. Remove the right cover, REP 19.7.
6. Remove the exit top cover assembly, REP 19.9.
7. Remove the exit chute assembly, REP 17.5.
8. Turn the exit chute assembly upside down, release the hook, then remove the exit gear, Figure 1.
9. Release the hook that fixes the exit bearing, then remove the exit roll assembly, Figure 1.

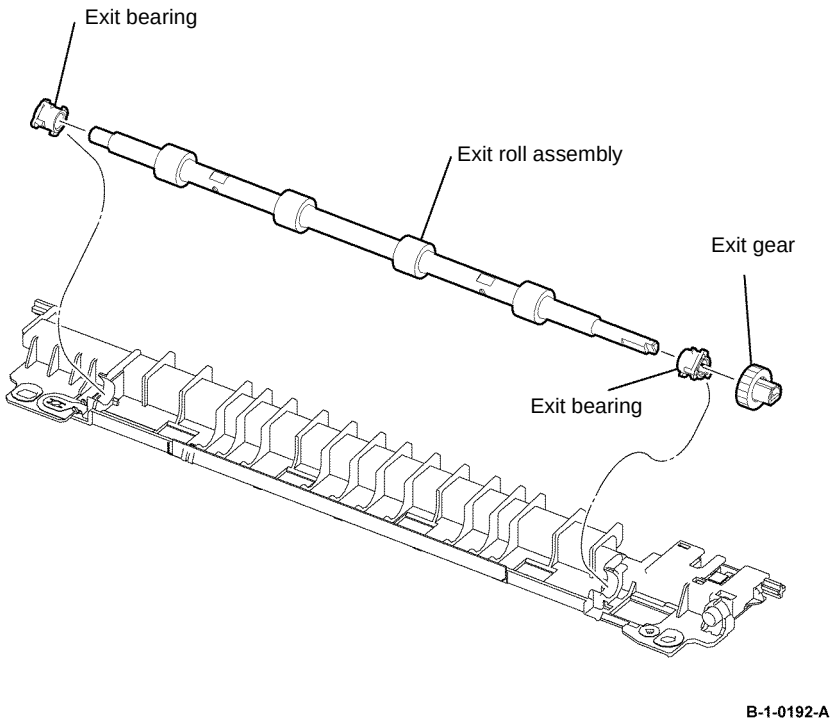

Figure 1 Exit roll assembly removal

Replacement

The replacement is the reverse of the removal procedure.

REP 17.2 Exit Roll Assembly, Exit Chute Assembly B400

Parts List on PL 17.1

Removal

WARNING

Switch off the electricity to the machine, GP 10. Disconnect the power cord from the customer supply while performing tasks that do not need electricity. Electricity can cause death or injury. Moving parts can cause injury.

1. Remove the fuser, REP 7.2.
2. Open the MSI cover, PL 13.2 Item 99.
3. Pull out the MSI tray assembly, PL 13.2 Item 9.
4. Remove the front cover assembly, REP 19.2.
5. Remove the rear cover assembly, REP 19.14.
6. Remove the UI console assembly, REP 1.3.
7. Remove the exit top cover assembly, REP 19.10.
8. Remove two screws (silver, M3, 6mm) that fix the exit chute assembly to the printer. Lift the exit chute assembly in the arrowed direction, then disconnect P/J272 from the photo sensor, Figure 1.
9. Bend the left cover release the two bosses of the exit chute assembly from the printer, then lift the exit chute assembly in the arrowed direction, Figure 1.
10. Disconnect PJ271 from the exit sensor, then remove the exit chute assembly, Figure 1.
11. Remove the exit gear. Release the hook that fixes the exit bearing, then remove the exit bearing and the exit roll assembly, Figure 1.

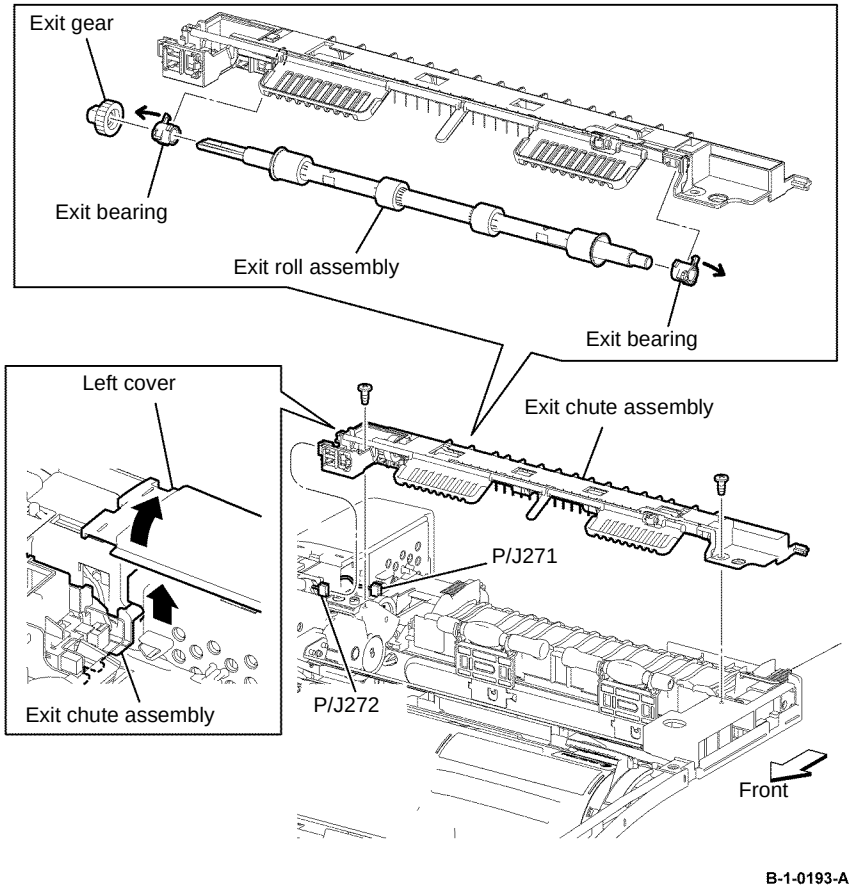

Figure 1 Exit chute assembly and exit roll assembly removal

Replacement

1. The replacement is the reverse of the removal procedure.
2. When installing the exit chute assembly, ensure the end of the sensor earth spring is in contact with the plate on the frame, Figure 2.

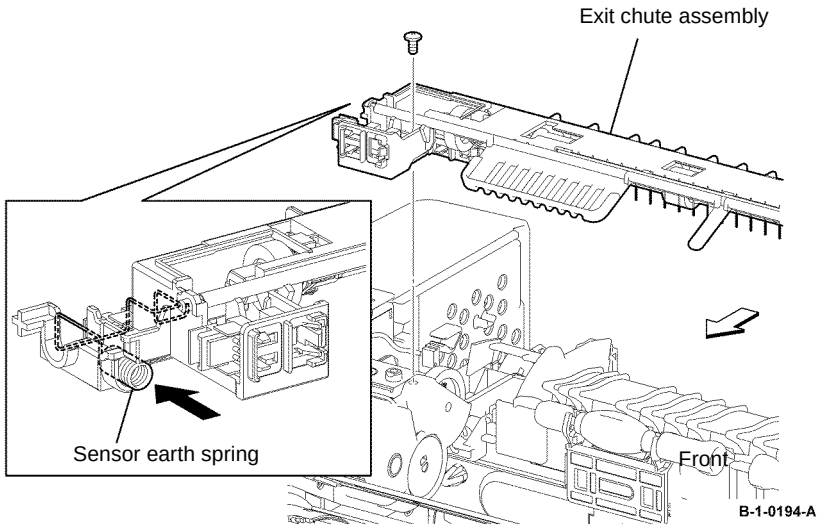

Figure 2 Exit chute assembly installation

REP 17.3 Left and Right Pinch Assembly B405

Parts List on PL 17.1

Removal

WARNING

Switch off the electricity to the machine, GP 10. Disconnect the power cord from the customer supply while performing tasks that do not need electricity. Electricity can cause death or injury. Moving parts can cause injury.

1. Open the MSI cover, PL 13.2 Item 99.
2. Pull out the MSI tray assembly, PL 13.2 Item 9.
3. Remove the front cover assembly, REP 19.1.
4. Remove the rear cover assembly, REP 19.13.
5. Remove the right cover, REP 19.7.
6. Remove the ESS window cover assembly, REP 19.3.
7. Remove the WIFI cap cover, REP 19.19.
8. Remove the left cover, REP 19.11.
9. Remove the UI access door, console assembly, ICCR cover, UI top cover, IIT top cover and IIT left cover, REP 1.1.
10. Remove the UI harness assembly, UI speaker, UI bottom frame, REP 1.2.
11. Remove the scanner assembly, REP 21.1.
12. Remove the fuser, REP 7.1.
13. Remove the exit top cover assembly, REP 19.9.

CAUTION

Applying excessive force to the hooks may cause breakage.

14. Release the hooks, then remove the left and right pinch assemblies, Figure 1.

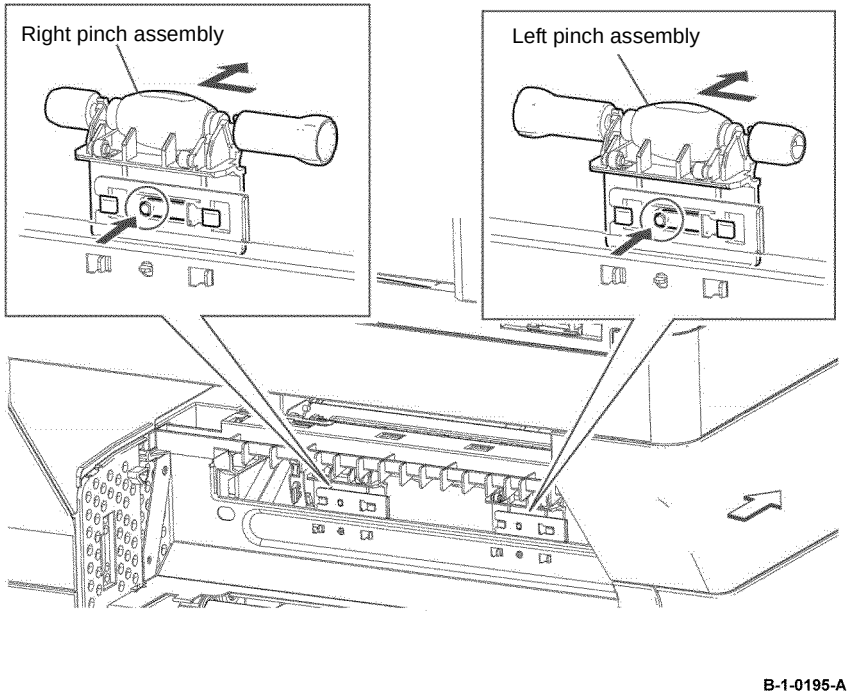

Figure 1 Left and right pinch assembly removal

Replacement

The replacement is the reverse of the removal procedure.

REP 17.4 Left and Right Pinch Assembly B400

Parts List on PL 17.1

Removal

WARNING

Switch off the electricity to the machine, GP 10. Disconnect the power cord from the customer supply while performing tasks that do not need electricity. Electricity can cause death or injury. Moving parts can cause injury.

1. Remove the fuser unit, REP 7.2.
2. Open the MSI cover, PL 13.2 Item 99.
3. Pull out the MSI tray assembly, PL 13.2 Item 9.
4. Remove the front cover assembly, REP 19.2.
5. Remove the rear cover assembly, REP 19.14.
6. Remove the UI console assembly, REP 1.3.
7. Remove the exit top cover assembly, REP 19.10.

CAUTION

Applying excessive force to the hooks may cause breakage.

8. Release the hooks, then remove the left and right pinch assemblies, Figure 1.

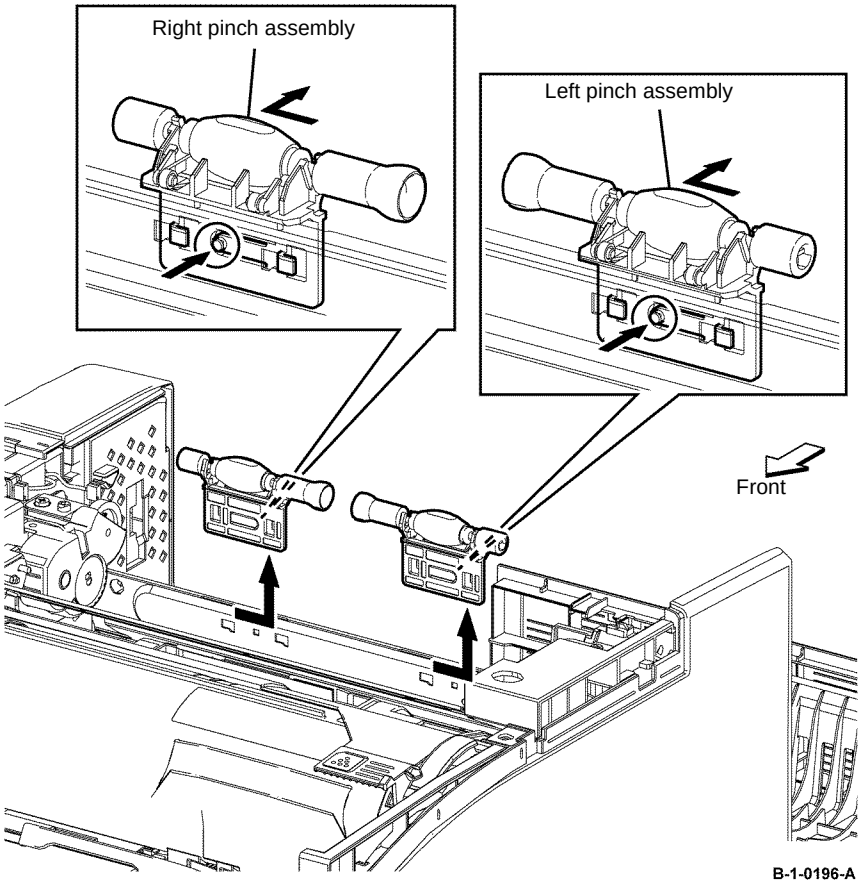

Figure 1 Left and right pinch assembly removal

Replacement

The replacement is the reverse of the removal procedure.

REP 17.5 Exit Chute Assembly B405

Parts List on PL 17.1

Removal

WARNING

Switch off the electricity to the machine, GP 10. Disconnect the power cord from the customer supply while performing tasks that do not need electricity. Electricity can cause death or injury. Moving parts can cause injury.

WARNING

Take care during this procedure. Sharp edges may be present that can cause injury.

1. Open the MSI cover, PL 13.2 Item 99.
2. Pull out the MSI tray assembly, PL 13.2 Item 9.
3. Remove the front cover assembly, REP 19.1.
4. Remove the rear cover assembly, REP 19.13.
5. Remove the right cover, REP 19.7.
6. Remove the ESS window cover assembly, REP 19.3.
7. Remove the WIFI cap cover, REP 19.19.
8. Remove the left cover, REP 19.11.
9. Remove the UI access door, console assembly, ICCR cover, UI top cover, IIT top cover and IIT left cover, REP 1.1.
10. Remove the UI harness assembly, UI speaker, UI bottom frame, REP 1.2.
11. Remove the scanner assembly, REP 21.1.
12. Remove the exit top cover assembly, REP 19.9.

13. Remove two screws (silver, M3, 6mm) that fix the exit chute assembly to the printer. Lift the exit chute assembly in the arrowed direction, then disconnect P/J272 from the full stack sensor, Figure 1.

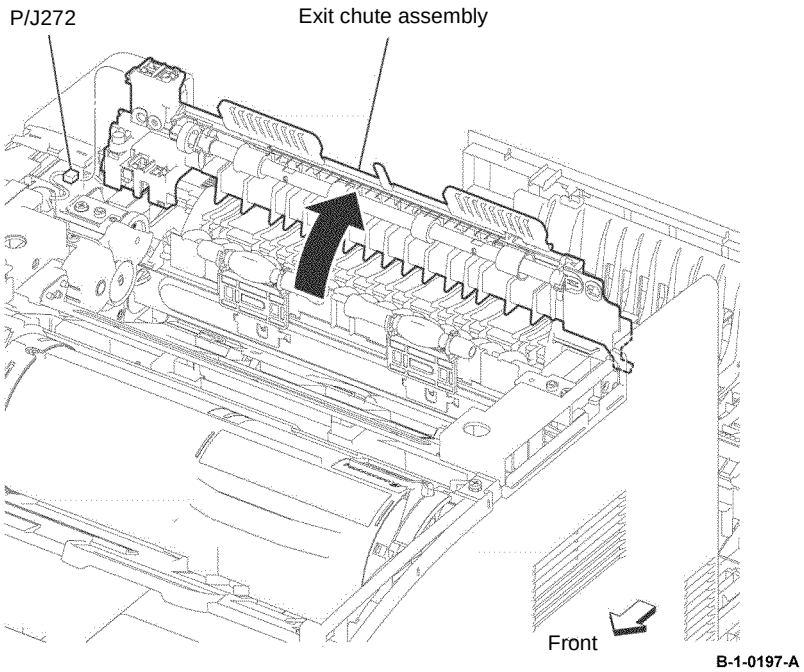

Figure 1 Full stack sensor disconnect

14. Bend the left cover, release the two bosses of the exit chute assembly from the printer, then lift the exit chute assembly in the arrowed direction, Figure 2.
15. Disconnect P/J271 from the exit sensor, then remove the exit chute assembly, Figure 2.
16. Remove the exit gear. Release the hook that fixes the exit bearing, then remove the exit bearing and the exit roll assembly, Figure 2.

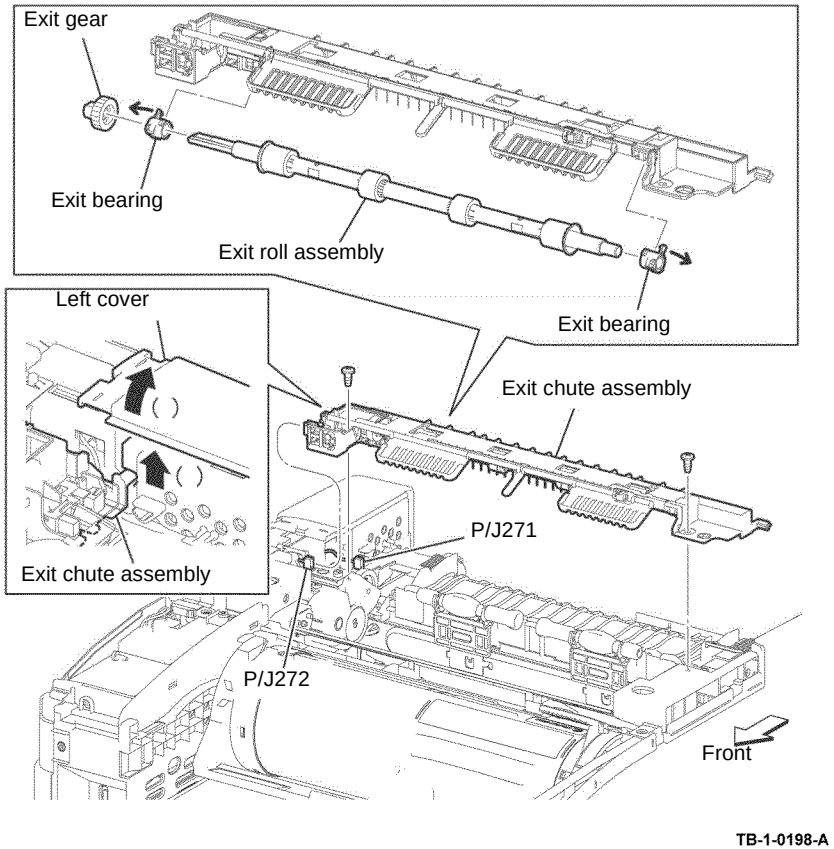

Figure 2 Exit chute assembly removal

Replacement

1. The replacement is the reverse of the removal procedure.
2. When installing the exit chute assembly, ensure the end of the sensor earth spring is in contact with the plate on the frame, Figure 3.

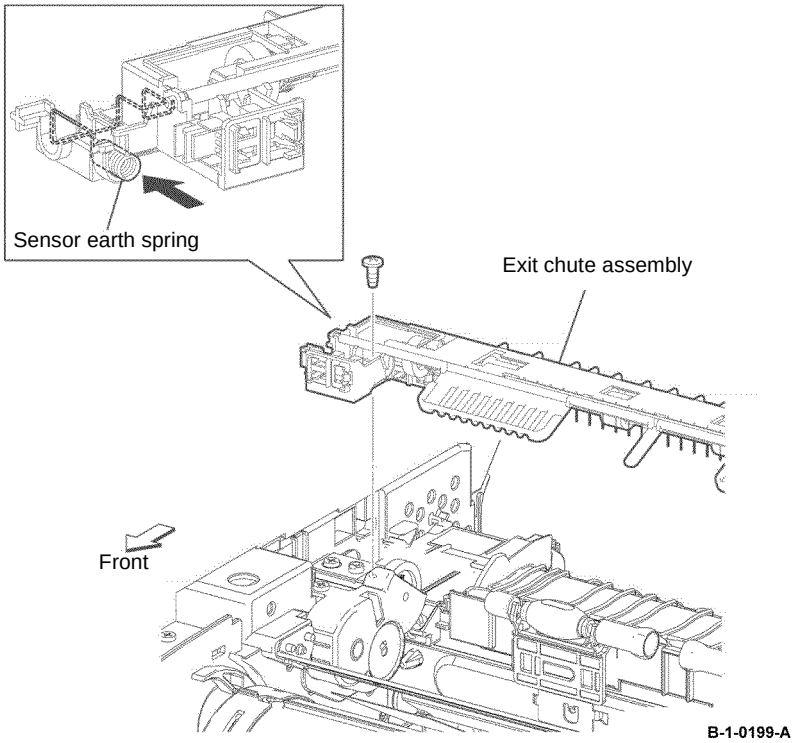

Figure 3 Exit chute assembly installation

REP 18.1 ESS PWB Assembly B405

Parts List on PL 18.1B

Removal

WARNING

Switch off the electricity to the machine, GP 10. Disconnect the power cord from the customer supply while performing tasks that do not need electricity. Electricity can cause death or injury. Moving parts can cause injury.

WARNING

Take care during this procedure. Sharp edges may be present that can cause injury.

Figure 1 ESD symbol

CAUTION

Observe ESD procedures during this procedure.

CAUTION

When installing a new ESS PWB and a new MCU PWB at the same time, first install the new ESS PWB, switch off, then switch on the machine. If the new ESS PWB installation is successful, switch off the machine, then install the new MCU PWB.

CAUTION

If a new ESS PWB is to be installed, ensure the EMMC card is removed from the old ESS PWB, then installed onto the new ESS PWB.

CAUTION

When installing a new ESS PWB, address book data will be lost. Prior to removal, backup the address book as detailed in the System Administrator's Guide.

1. Open the MSI cover, PL 13.2 Item 99.
2. Pull out the MSI tray assembly, PL 13.2 Item 9.
3. Remove the front cover assembly, REP 19.1.
4. Remove the rear cover assembly, REP 19.13.
5. Remove the ESS window cover assembly, REP 19.3.
6. Remove the WIFI cap cover, REP 19.19.
7. Remove the left cover, REP 19.11.
8. Remove seven screws (silver, M3, 6mm), then remove the lower ESS window plate with WIFI release lever, Figure 2.
9. Remove two screws (silver, M3, 6mm), then remove the ESS top plate, Figure 2.

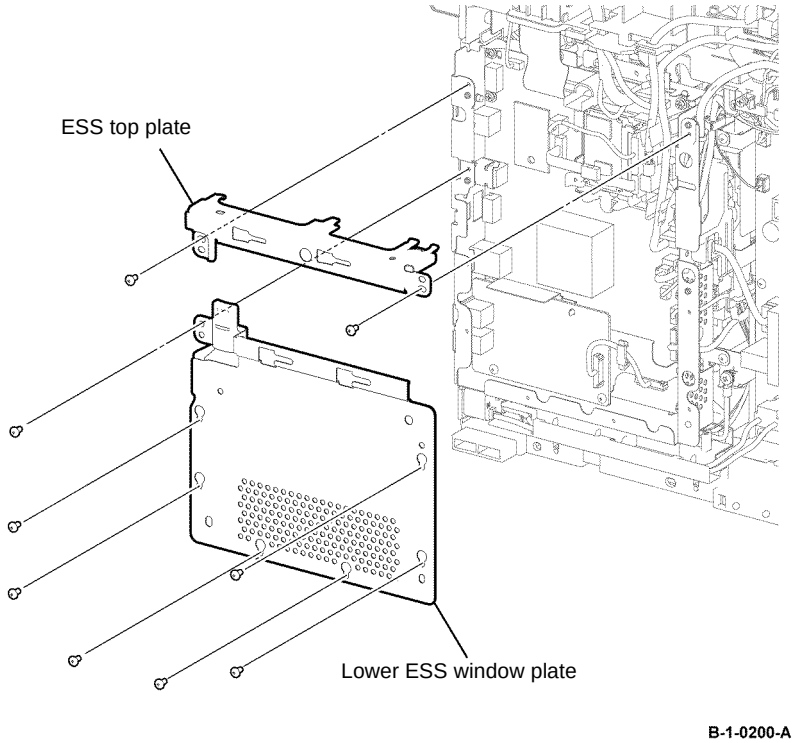

Figure 2 ESS top and lower plate removal

10. Remove the fax clamp fixing the fax harness assembly, Figure 3.
11. Disconnect P/J432 from the ESS PWB and P/J1350 from the Fax PWB, then remove the fax harness, Figure 3.

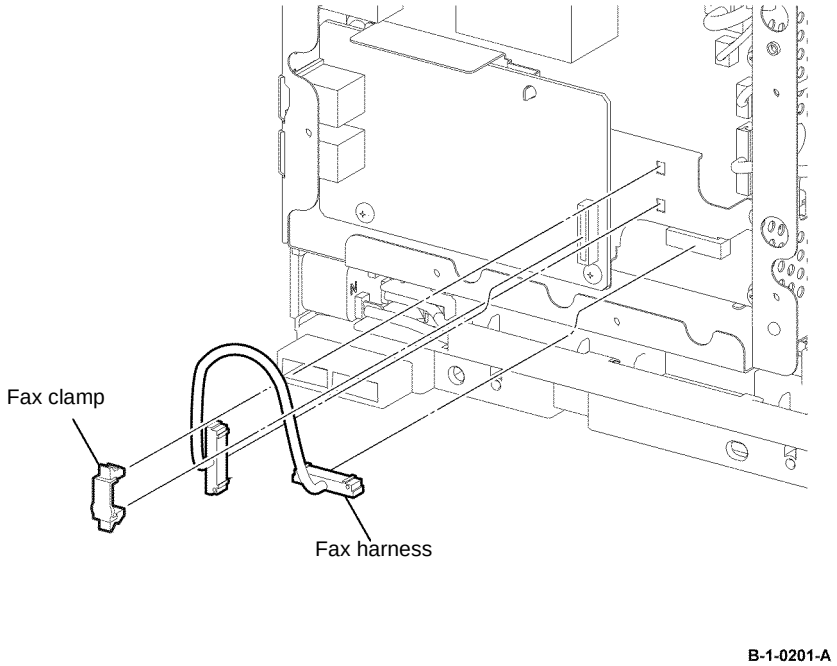

Figure 3 Fax harness removal

12. Remove two screws (silver, M3, 6mm), then remove the fax PWB, Figure 4.
13. Remove three screws (silver, M3, 6mm), then remove the fax plate, Figure 4.

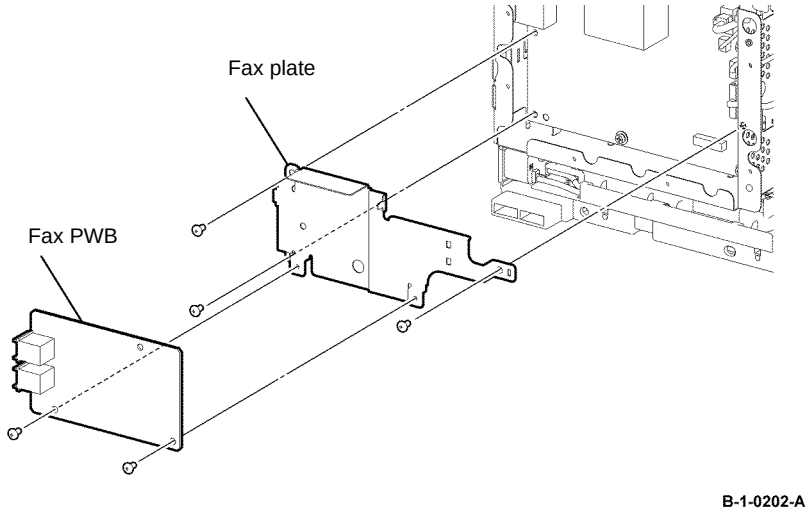

Figure 4 Fax PWB and plate removal

14. Disconnect, P/J1352, P/J631 and P/J632, then remove the harnesses from the HDD bracket, Figure 5.
15. Disconnect P/J302 and P/J310, then remove the option HDD, Figure 5.
16. Remove one screw (silver, M3, 6mm), then release the two bosses to remove the HDD bracket, Figure 5.

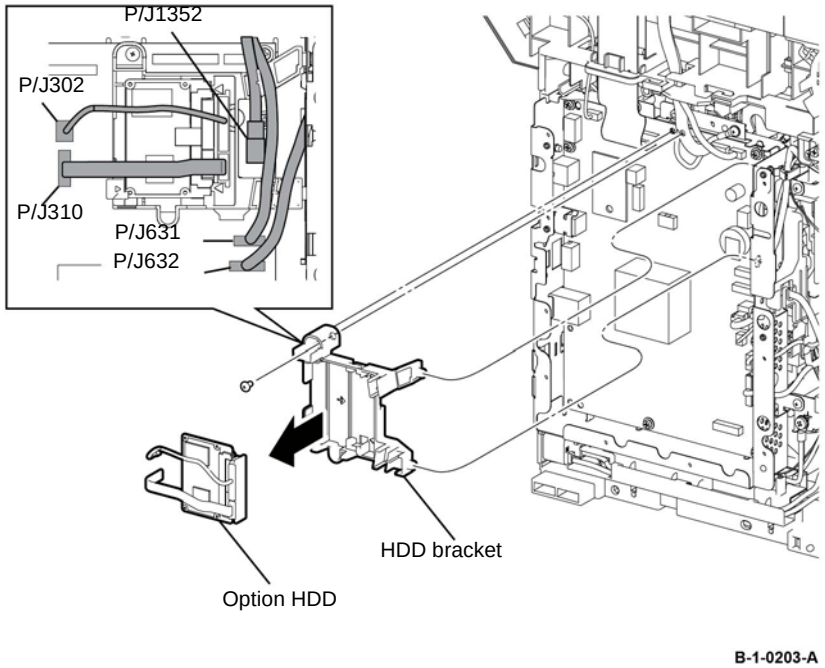

Figure 5 HDD and HDD bracket removal

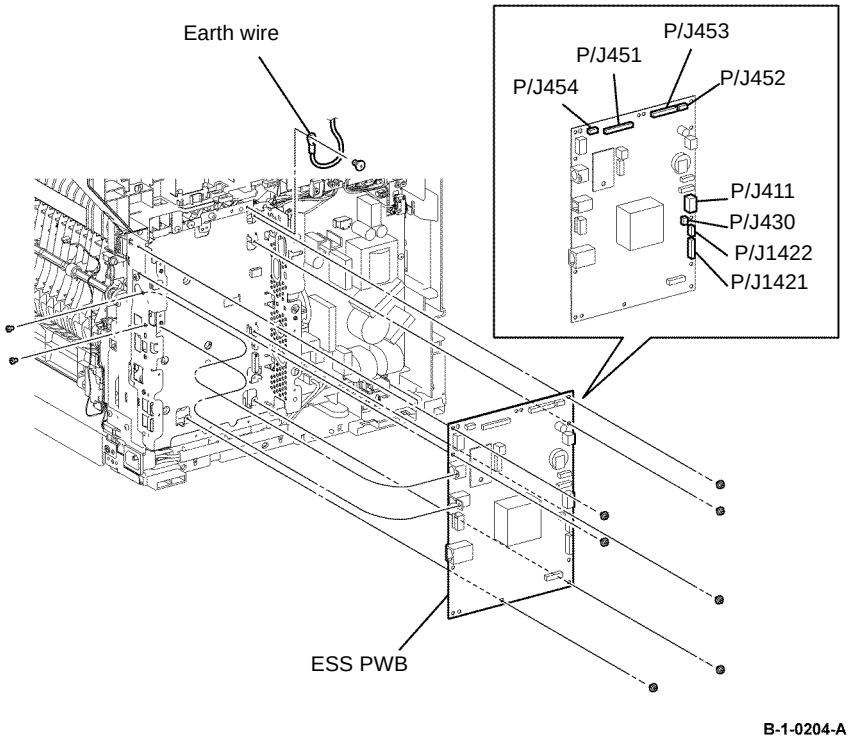

Figure 6 ESS PWB removal

17. Disconnect all connectors from the ESS PWB, Figure 6.
18. Remove one screw (silver, M3, 6mm) fixing the earth wire, Figure 6.

CAUTION

When handling the ESS PWB, ensure that only the marked areas at the top and bottom of the PWB are touched.

19. Remove seven screws (silver with spring washer and plain washer, M3, 6mm) and two screws (silver, M3, 4mm), then remove the ESS PWB, Figure 6.

Replacement

1. The replacement is the reverse of the removal procedure.
2. If a new ESS PWB is to be installed, remove the EMMC card from the old ESS PWB, then install it onto the new ESS PWB, Figure 7.

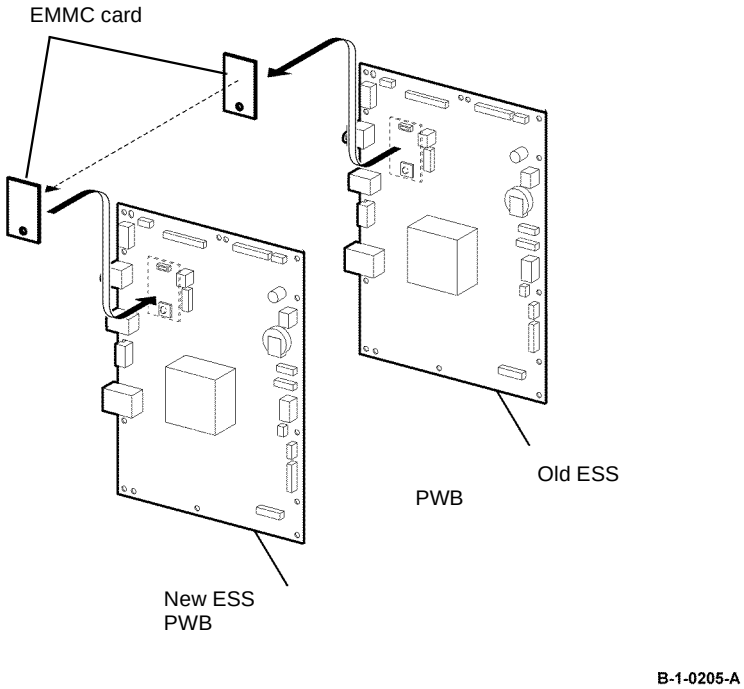

Figure 7 EMMC card

3. When installing the ESS PWB, ensure the harness is connected properly to the power connector P/J441 before powering on the printer.

REP 18.2 ESS PWB Assembly B400

Parts List on PL 18.1A

Removal

WARNING

Switch off the electricity to the machine, GP 10. Disconnect the power cord from the customer supply while performing tasks that do not need electricity. Electricity can cause death or injury. Moving parts can cause injury.

WARNING

Take care during this procedure. Sharp edges may be present that can cause injury.

Figure 1 ESD symbol

CAUTION

Observe ESD procedures during this procedure.

CAUTION

When installing a new ESS PWB and a new MCU PWB at the same time, first install the new ESS PWB, switch off, then switch on the machine. If the new ESS PWB installation is successful, switch off the machine, then install the new MCU PWB.

CAUTION

If a new ESS PWB is to be installed, ensure the EMMC card is removed from the old ESS PWB, then installed onto the new ESS PWB.

CAUTION

When installing a new ESS PWB, address book data will be lost. Prior to removal, backup the address book as detailed in the System Administrator's Guide.

1. Open the MSI cover, PL 13.2 Item 99.
2. Pull out the MSI tray assembly, PL 13.2 Item 9.
3. Remove the front cover assembly, REP 19.2.
4. Remove the rear cover assembly, REP 19.14.
5. Remove the UI console assembly, REP 1.3.
6. Remove the exit top cover assembly, REP 19.10.
7. Remove the WIFI cap cover, REP 19.20.
8. Remove the ESS window cover assembly, REP 19.4.
9. Remove the front/left UI cover assembly, REP 1.4.
10. Remove the left cover, REP 19.12.
11. Remove seven screws (silver, M3, 6mm), then remove the lower ESS window plate with WIFI release lever, Figure 2.
12. Remove two screws (silver, M3, 6mm), then remove the ESS top plate, Figure 2.

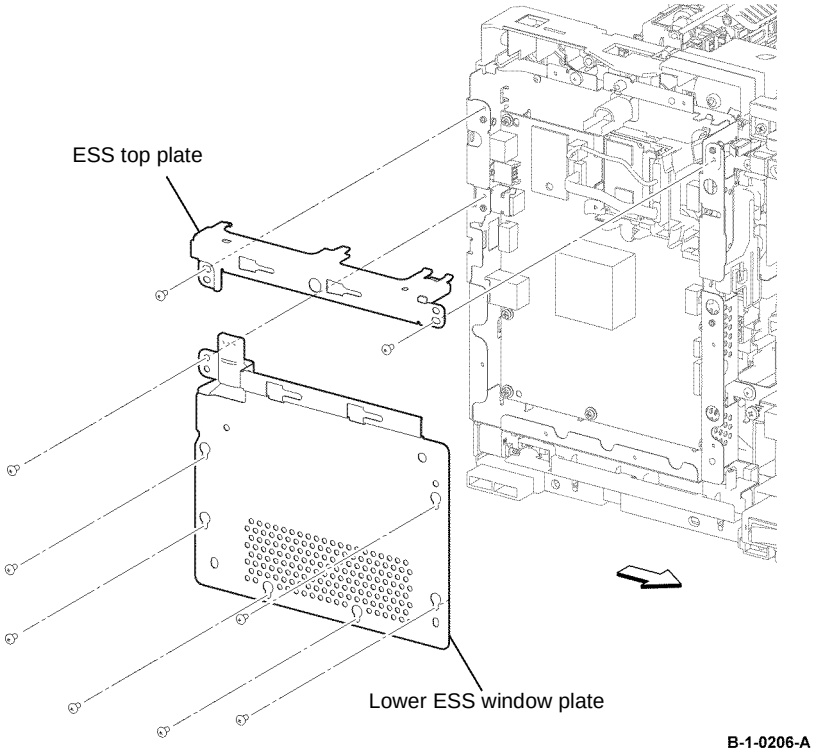

Figure 2 ESS top and lower plate removal

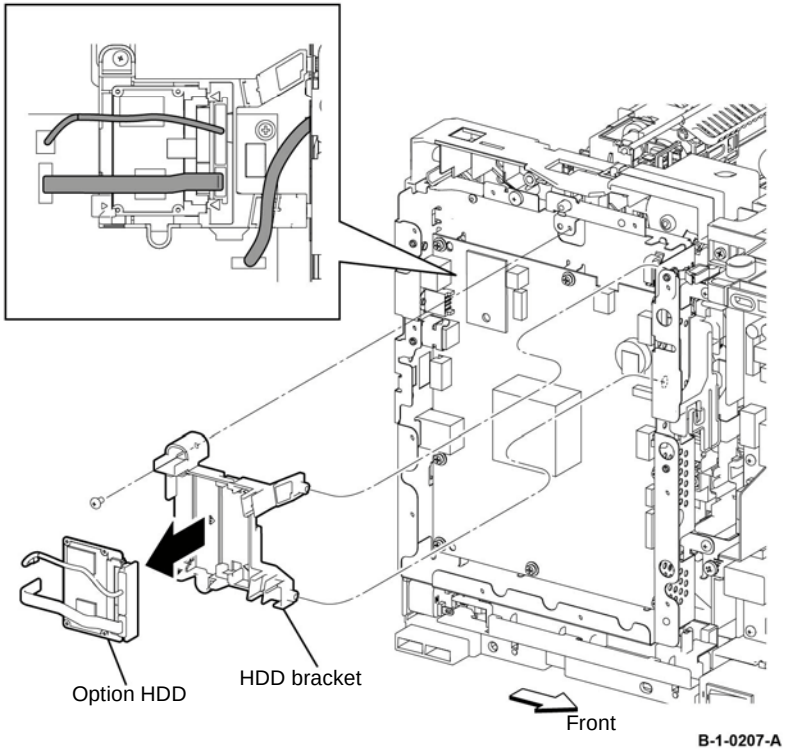

Figure 3 HDD and HDD bracket removal

13. Disconnect P/J631, then remove the harness from the HDD bracket, Figure 3.
14. Disconnect P/J302 and P/J310, then remove the option HDD, Figure 3.
15. Remove one screw (silver, M3, 6mm), then release the two bosses to remove the HDD bracket, Figure 3.
16. Disconnect all connectors from the ESS PWB, Figure 4.

CAUTION

When handling the ESS PWB, ensure that only the marked areas at the top and bottom of the PWB are touched.

17. Remove eight screws (silver with spring washer and plain washer, M3, 6mm) and three screws (silver, M3, 4mm), then remove the ESS PWB, Figure 4.

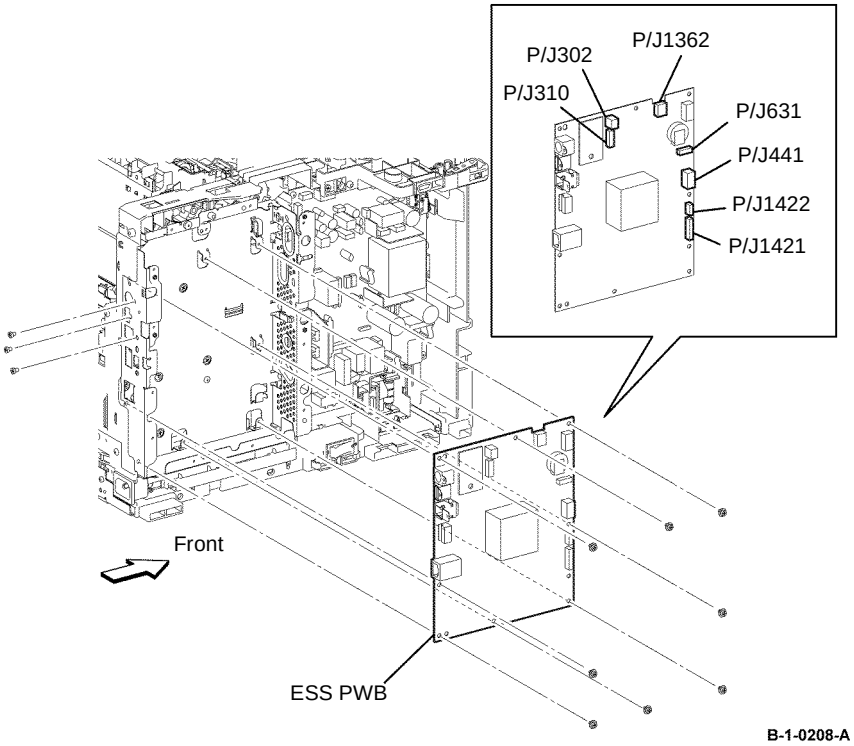

Figure 4 ESS PWB removal

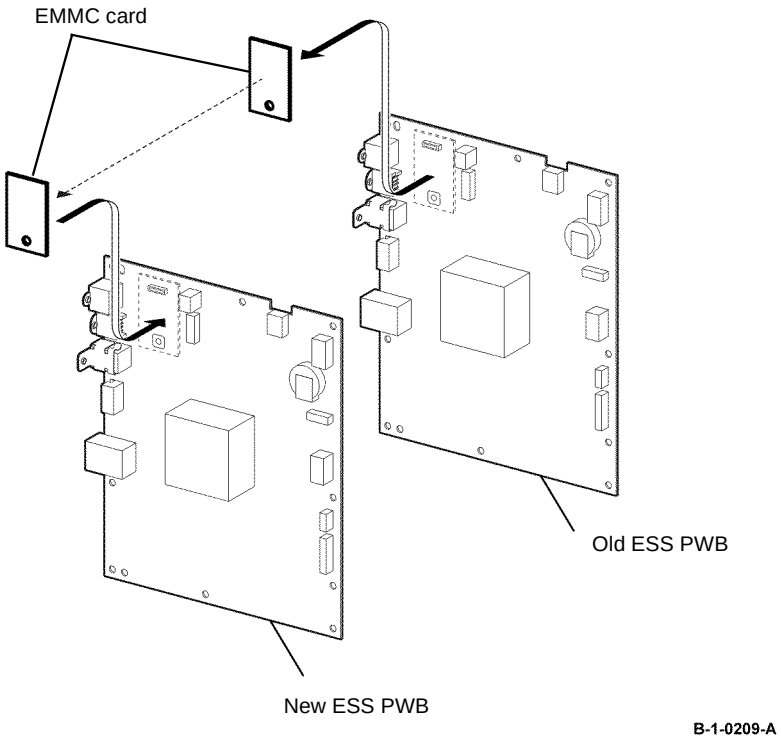

Figure 5 EMMC card

Replacement

1. The replacement is the reverse of the removal procedure.
2. If a new ESS PWB is to be installed, remove the EMMC card from the old ESS PWB, then install it onto the new ESS PWB, Figure 5.
3. When installing the ESS PWB, ensure the harness is connected properly to the power connector P/J441 before powering on the printer.

REP 18.3 MCU PWB Assembly B405

Parts List on PL 18.2

Removal

WARNING

Switch off the electricity to the machine, GP 10. Disconnect the power cord from the customer supply while performing tasks that do not need electricity. Electricity can cause death or injury. Moving parts can cause injury.

WARNING

Take care during this procedure. Sharp edges may be present that can cause injury.

Figure 1 ESD symbol

CAUTION

Observe ESD procedures during this procedure.

CAUTION

When installing a new MCU PWB and a new ESS PWB at the same time, first install the new MCU PWB, switch off, then switch on the machine. If the new MCU PWB installation is successful, switch off the machine, then install the new ESS PWB.

CAUTION

If a new MCU PWB is to be installed, ensure the U105 ROM chip is removed from the old MCU PWB, then installed onto the new MCU PWB.

1. Open the MSI cover, PL 13.2 Item 99.
2. Pull out the MSI tray assembly, PL 13.2 Item 9.
3. Remove the front cover assembly, REP 19.1.
4. Remove the drum cartridge, REP 8.1.
5. Remove the MCU cover, by releasing the hooks, Figure 2.
6. Disconnect all connectors from the MCU PWB, Figure 2.
7. Remove four screws (silver, M3, 6mm), then remove the MCU PWB, Figure 2.

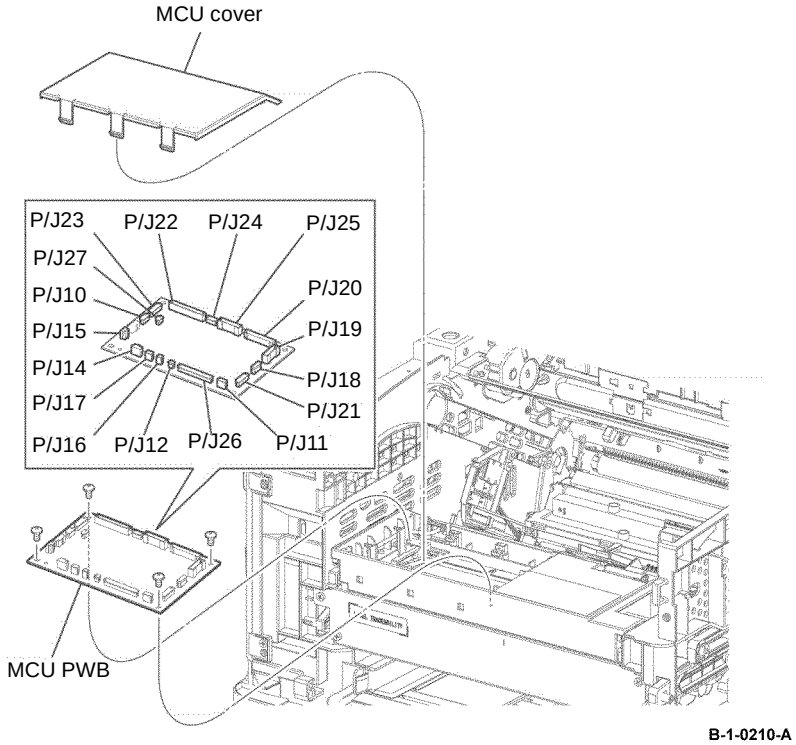

Figure 2 MCU PWB removal

Replacement

CAUTION

Do not confuse connectors with same number of pins. The PJ12 connectors are white. The PJ15 connectors are black, Figure 3.

1. The replacement is the reverse of the removal procedure.

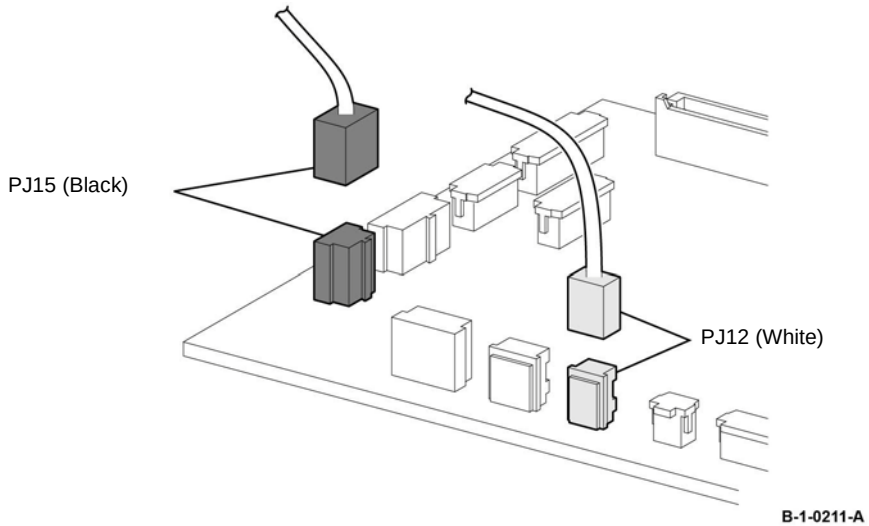

Figure 3 MCU PWB installation

2. If a new MCU PWB is to be installed, remove the U105 ROM chip from the old MCU PWB, then install it onto the new MCU PWB, Figure 4.

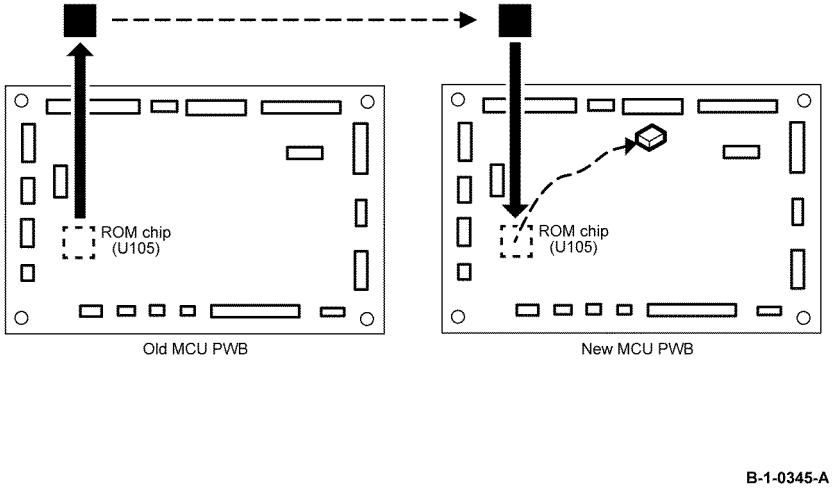

Figure 4 U105 ROM chip installation

REP 18.4 MCU PWB Assembly B400

Parts List on PL 18.2

Removal

WARNING

Switch off the electricity to the machine, GP 10. Disconnect the power cord from the customer supply while performing tasks that do not need electricity. Electricity can cause death or injury. Moving parts can cause injury.

WARNING

Take care during this procedure. Sharp edges may be present that can cause injury.

Figure 1 ESD symbol

CAUTION

Observe ESD procedures during this procedure.

CAUTION

When installing a new MCU PWB and a new ESS PWB at the same time, first install the new MCU PWB, switch off, then switch on the machine. If the new MCU PWB installation is successful, switch off the machine, then install the new ESS PWB.

CAUTION

If a new MCU PWB is to be installed, ensure the U105 ROM chip is removed from the old MCU PWB, then installed onto the new MCU PWB.

1. Open the MSI cover, PL 13.2 Item 99.
2. Pull out the MSI tray assembly, PL 13.2 Item 9.
3. Remove the front cover assembly, REP 19.2.
4. Remove the drum cartridge, REP 8.2.
5. Remove the MCU cover, by releasing the hooks, Figure 2.
6. Disconnect all connectors from the MCU PWB, Figure 2.
7. Remove four screws (silver, M3, 6mm), then remove the MCU PWB, Figure 2.

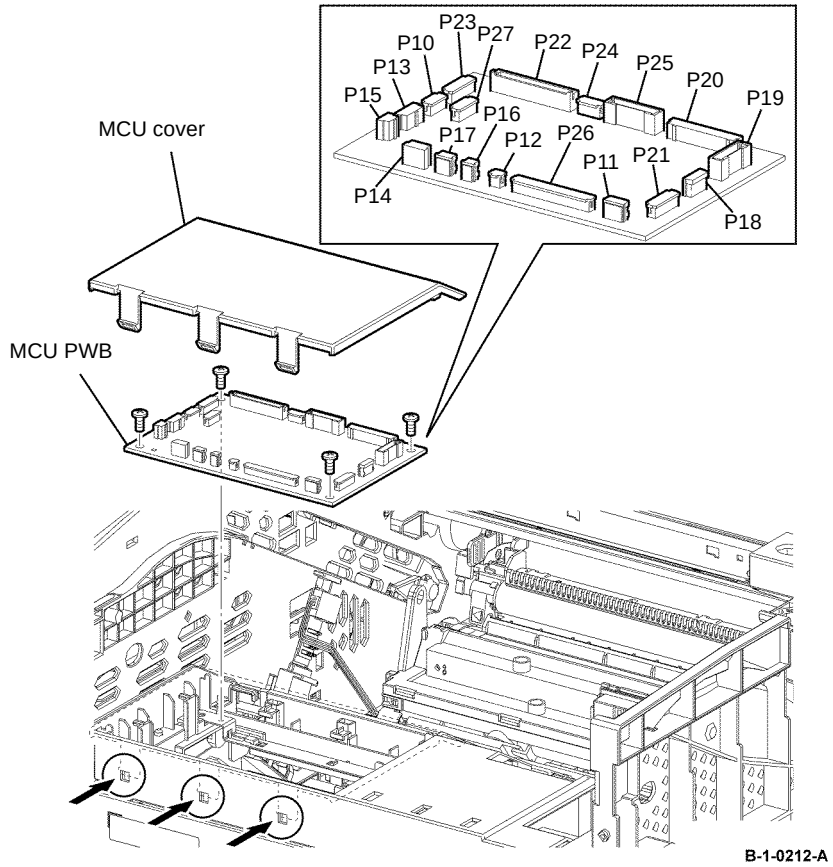

Figure 2 MCU PWB removal

Replacement

CAUTION

Do not confuse connectors with same number of pins. The PJ15 connectors are white. The PJ15 connectors are black, Figure 3.

1. The replacement is the reverse of the removal procedure.

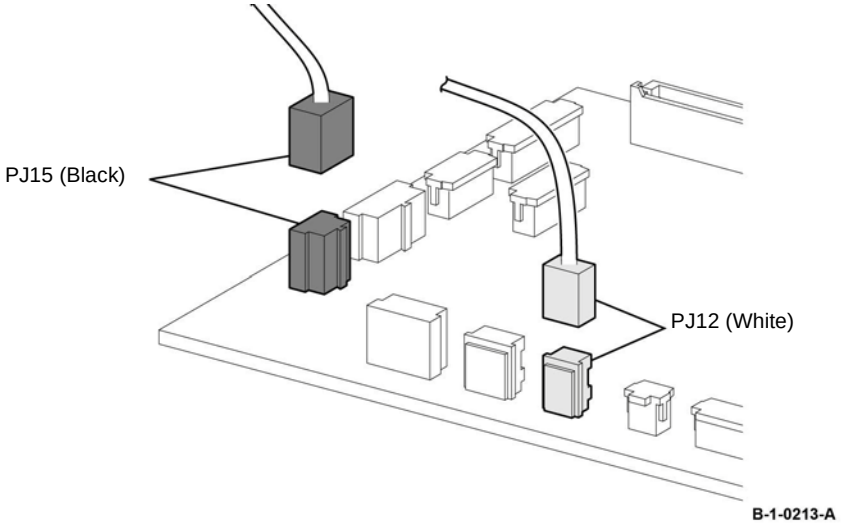

Figure 3 MCU PWB Installation

2. If a new MCU PWB is to be installed, remove the U105 ROM chip from the old MCU PWB, then install it onto the new MCU PWB, Figure 4.

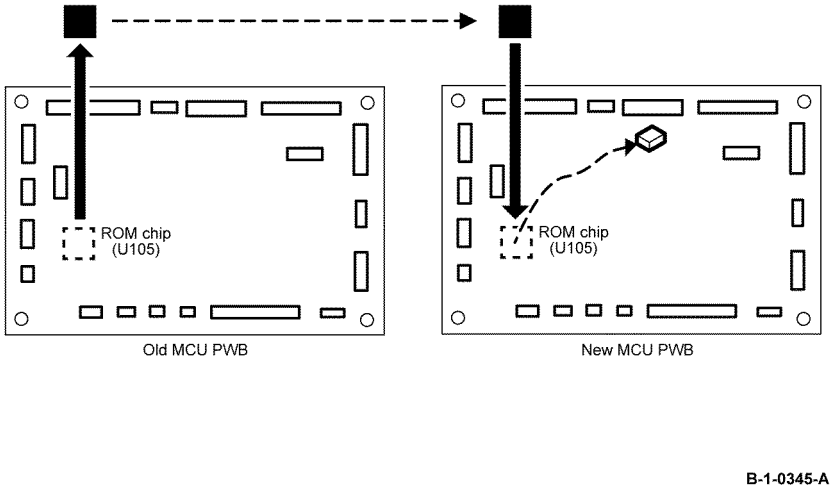

Figure 4 U105 ROM chip installation

REP 18.5 HVPS B405

Parts List on PL 18.2

Removal

WARNING

Switch off the electricity to the machine, GP 10. Disconnect the power cord from the customer supply while performing tasks that do not need electricity. Electricity can cause death or injury. Moving parts can cause injury.

WARNING

Take care during this procedure. Sharp edges may be present that can cause injury.

Figure 1 ESD symbol

CAUTION

Observe ESD procedures during this procedure.

1. Open the MSI cover, PL 13.2 Item 99.
2. Pull out the MSI tray assembly, PL 13.2 Item 9.
3. Remove the front cover assembly, REP 19.1.
4. Remove the rear cover assembly, REP 19.13.
5. Remove the right cover, REP 19.7.
6. Disconnect P/J261 from the HVPS. Remove seven screws (silver, tapping, 8mm) that fix the HVPS. Release two bosses on the frame from the holes on the HVPS, then remove the HVPS, Figure 2.

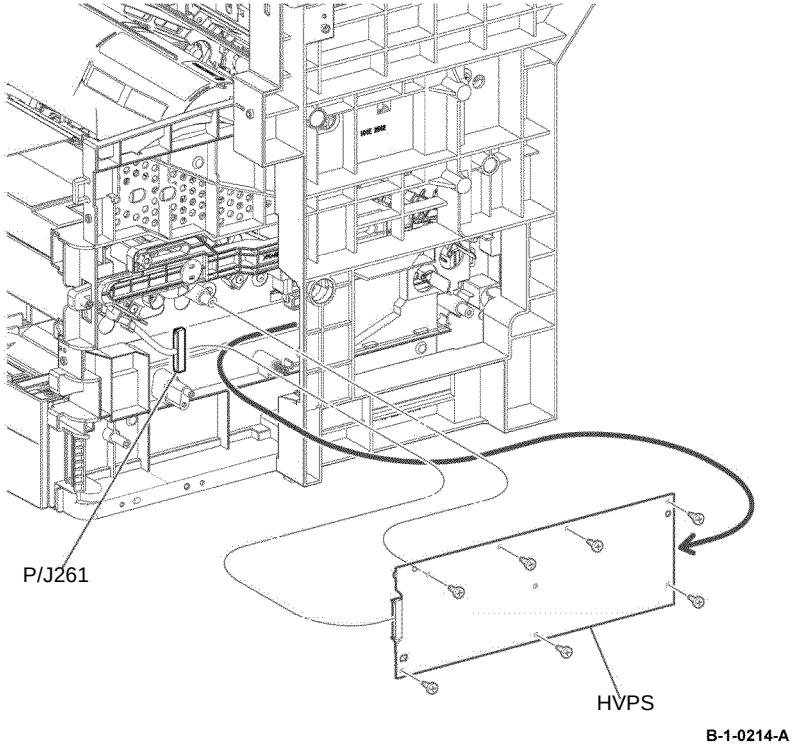

Figure 2 HVPS removal

Replacement

1. The replacement is the reverse of the removal procedure.
2. When installing the HVPS, ensure that the ends of the three conductive springs provided on the frame are in contact with the terminals on the board, and that the two sensors on the HVPS are correctly aligned with the registration shutter sensor, Figure 3.

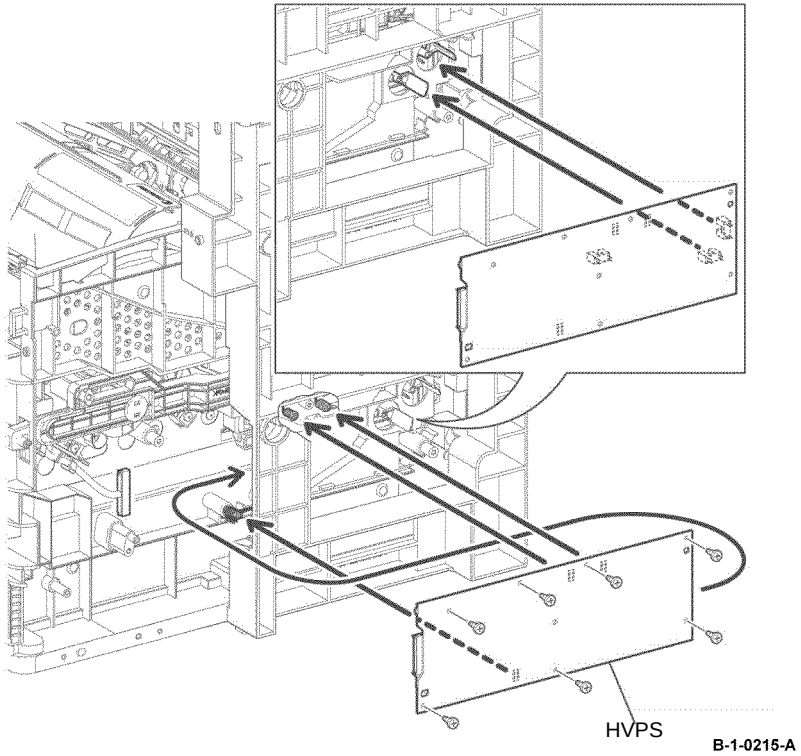

Figure 3 HVPS installation

REP 18.6 HVPS B400

Parts List on PL 18.2

Removal

WARNING

Switch off the electricity to the machine, GP 10. Disconnect the power cord from the customer supply while performing tasks that do not need electricity. Electricity can cause death or injury. Moving parts can cause injury.

WARNING

Take care during this procedure. Sharp edges may be present that can cause injury.

Figure 1 ESD symbol

CAUTION

Observe ESD procedures during this procedure.

1. Open the MSI cover, PL 13.2 Item 99.
2. Pull out the MSI tray assembly, PL 13.2 Item 9.
3. Remove the front cover assembly, REP 19.2.
4. Remove the rear cover assembly, REP 19.14.
5. Remove the UI console assembly, REP 1.3.
6. Remove the exit top cover assembly, REP 19.10.
7. Remove the right cover, REP 19.8.
8. Disconnect P/J261 from the HVPS. Remove seven screws (silver, tapping, 8mm) that fix the HVPS. Release two bosses on the frame from the holes on the HVPS, then remove the HVPS, Figure 2.

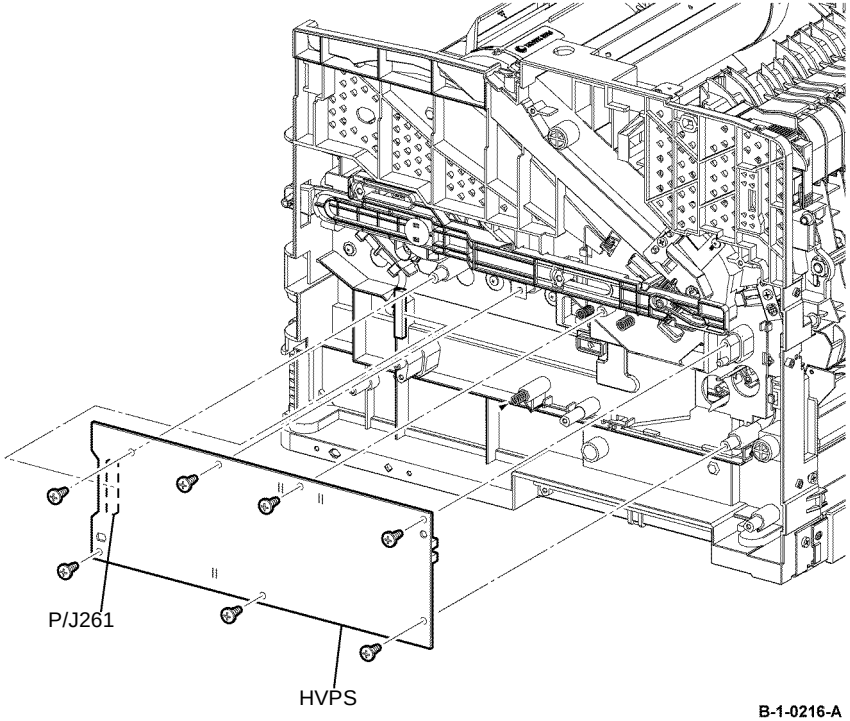

Figure 2 HVPS removal

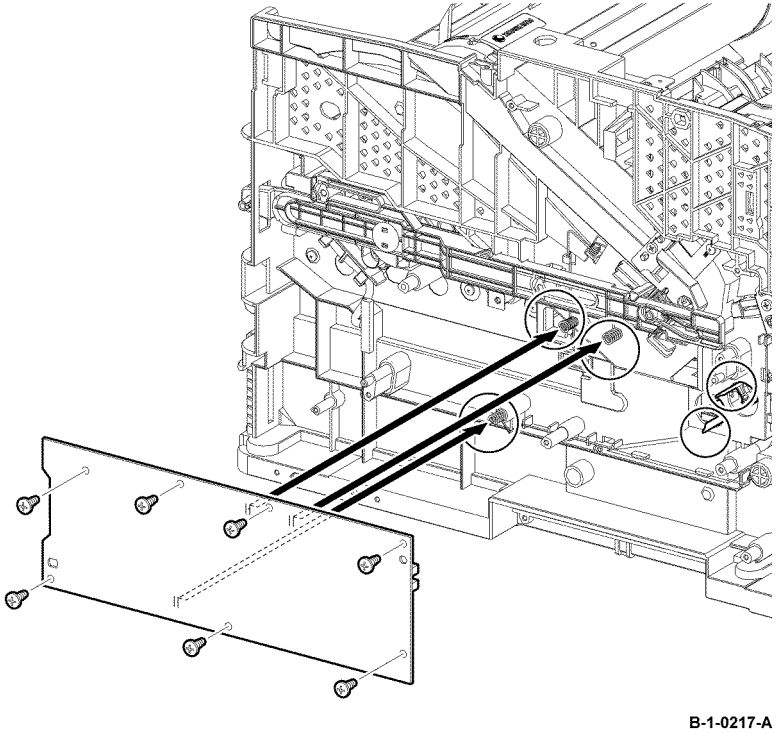

Figure 3 HVPS installation

Replacement

1. The replacement is the reverse of the removal procedure.
2. When installing the HVPS, ensure that the ends of the three conductive springs provided on the frame are in contact with the terminals on the board, and that the two sensor on the HVPS is correctly aligned with the registration shutter sensor, Figure 3.

REP 18.7 LVPS PWB B405

Parts List on PL 18.1B

Removal

WARNING

Switch off the electricity to the machine, GP 10. Disconnect the power cord from the customer supply while performing tasks that do not need electricity. Electricity can cause death or injury. Moving parts can cause injury.

WARNING

Take care during this procedure. Sharp edges may be present that can cause injury.

Figure 1 ESD symbol

CAUTION

Observe ESD procedures during this procedure.

1. Open the MSI cover, PL 13.2 Item 99.
2. Pull out the MSI tray assembly, PL 13.2 Item 9.
3. Remove the front cover assembly, REP 19.1.
4. Remove the rear cover assembly, REP 19.13.
5. Remove the ESS window cover assembly, REP 19.3.
6. Remove the WIFI cap cover, REP 19.19.
7. Remove the left cover, REP 19.11.
8. Disconnect all connectors from the LVPS PWB, Figure 2.
9. Remove eight screws (silver, M3, 6mm) that fix the LVPS PWB, then remove the LVPS PWB, Figure 2.

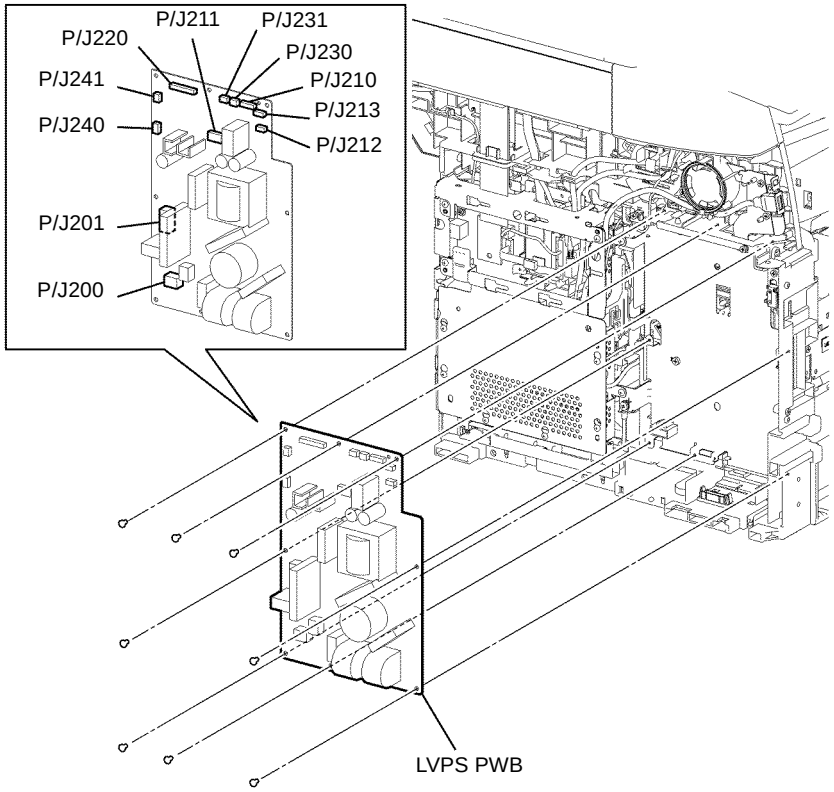

B-1-0218-A

Figure 2 LVPS PWB removal

Replacement

The replacement is the reverse of the removal procedure.

REP 18.8 LVPS PWB B400

Parts List on PL 18.1A

Removal

WARNING

Switch off the electricity to the machine, GP 10. Disconnect the power cord from the customer supply while performing tasks that do not need electricity. Electricity can cause death or injury. Moving parts can cause injury.

WARNING

Take care during this procedure. Sharp edges may be present that can cause injury.

Figure 1 ESD symbol

CAUTION

Observe ESD procedures during this procedure.

1. Open the MSI cover, PL 13.2 Item 99.
2. Pull out the MSI tray assembly, PL 13.2 Item 9.
3. Remove the front cover assembly, REP 19.2.
4. Remove the rear cover assembly, REP 19.14.
5. Remove the UI console assembly, REP 1.3.
6. Remove the exit top cover assembly, REP 19.10.
7. Remove the WIFI cap cover, REP 19.20.
8. Remove the ESS window cover assembly, REP 19.4.
9. Remove the front/left UI cover assembly, REP 1.4.
10. Remove the left cover, REP 19.12.
11. Disconnect all connectors from the LVPS PWB, Figure 2.
12. Remove nine screws (silver, M3, 6mm) that fix the LVPS PWB and two screws (silver, tapping, 8mm) that fix the front interlock switch assembly. Remove the LVPS PWB, Figure 2.

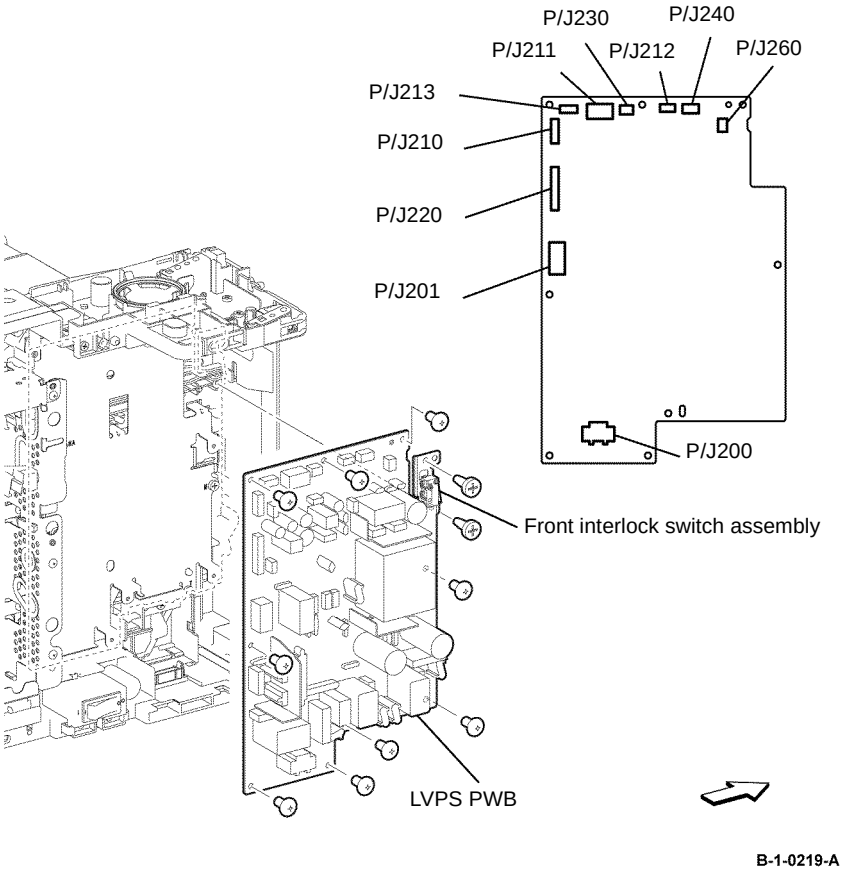

Figure 2 LVPS PWB removal

Replacement

The replacement is the reverse of the removal procedure.

REP 18.9 Front USB Harness B405

Parts List on PL 18.1B

Removal

WARNING

Switch off the electricity to the machine, GP 10. Disconnect the power cord from the customer supply while performing tasks that do not need electricity. Electricity can cause death or injury. Moving parts can cause injury.

WARNING

Take care during this procedure. Sharp edges may be present that can cause injury.

1. Open the MSI cover, PL 13.2 Item 99.
2. Pull out the MSI tray assembly, PL 13.2 Item 9.
3. Remove the front cover assembly, REP 19.1.
4. Remove the rear cover assembly, REP 19.13.
5. Remove the ESS window cover assembly, REP 19.3.
6. Remove the WIFI cap cover, REP 19.19.
7. Remove the left cover, REP 19.11.
8. Remove seven screws (silver, M3, 6mm), then remove the lower ESS window plate with WIFI release lever, Figure 1.
9. Remove two screws (silver, M3, 6mm), then remove the ESS top plate, Figure 1.

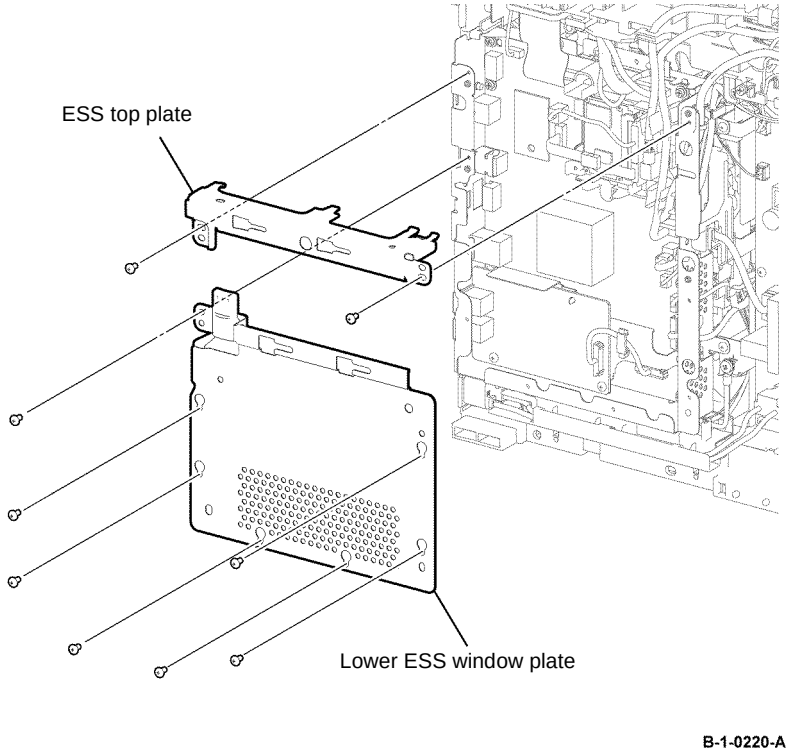

Figure 1 ESS top and lower plate removal

10. Disconnect P/J631 from the ESS PWB, Figure 2.
11. Remove two screws (silver, M3, 6mm), then remove the front USB harness, Figure 2.

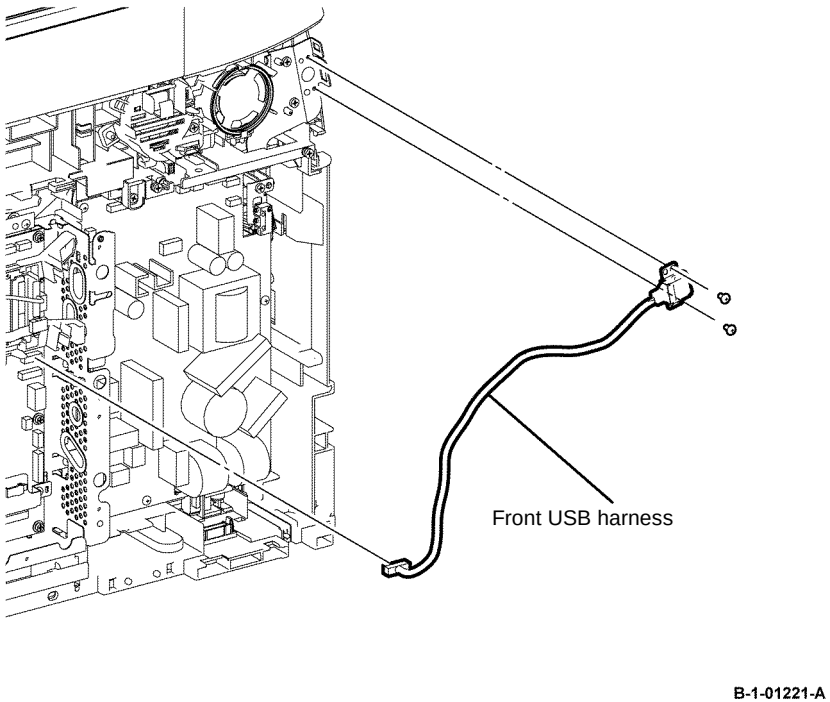

Figure 2 Front USB harness removal

Replacement

The replacement is the reverse of the removal procedure.

REP 18.10 Front USB Harness B400

Parts List on PL 18.1A

Removal

WARNING

Switch off the electricity to the machine, GP 10. Disconnect the power cord from the customer supply while performing tasks that do not need electricity. Electricity can cause death or injury. Moving parts can cause injury.

WARNING

Take care during this procedure. Sharp edges may be present that can cause injury.

1. Open the MSI cover, PL 13.2 Item 99.
2. Pull out the MSI tray assembly, PL 13.2 Item 9.
3. Remove the front cover assembly, REP 19.2.
4. Remove the rear cover assembly, REP 19.14.
5. Remove the UI console assembly, REP 1.3.
6. Remove the exit top cover assembly, REP 19.10.
7. Remove the WIFI cap cover, REP 19.20.
8. Remove the ESS window cover assembly, REP 19.4.
9. Remove the front/left UI cover assembly, REP 1.4.
10. Remove the left cover, REP 19.12.
11. Remove seven screws (silver, M3, 6mm), then remove the lower ESS window plate with WIFI release lever, Figure 1.
12. Remove two screws (silver, M3, 6mm), then remove the ESS top plate, Figure 1.

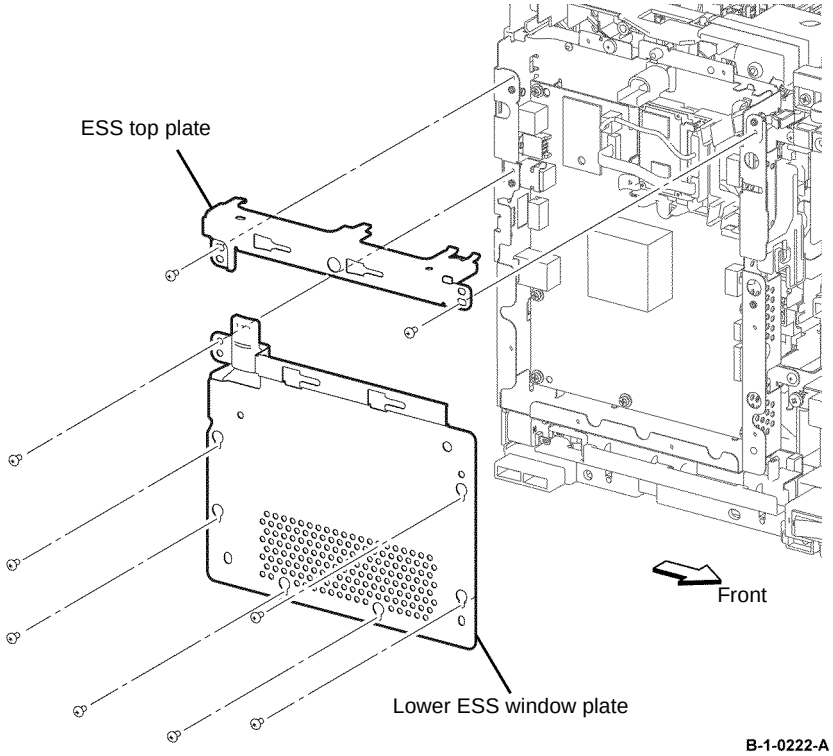

Figure 1 ESS top and lower plate removal

13. Disconnect P/J631 from the ESS PWB, Figure 2.
14. Remove two screws (silver, M3, 6mm), then remove the front USB harness, Figure 2.

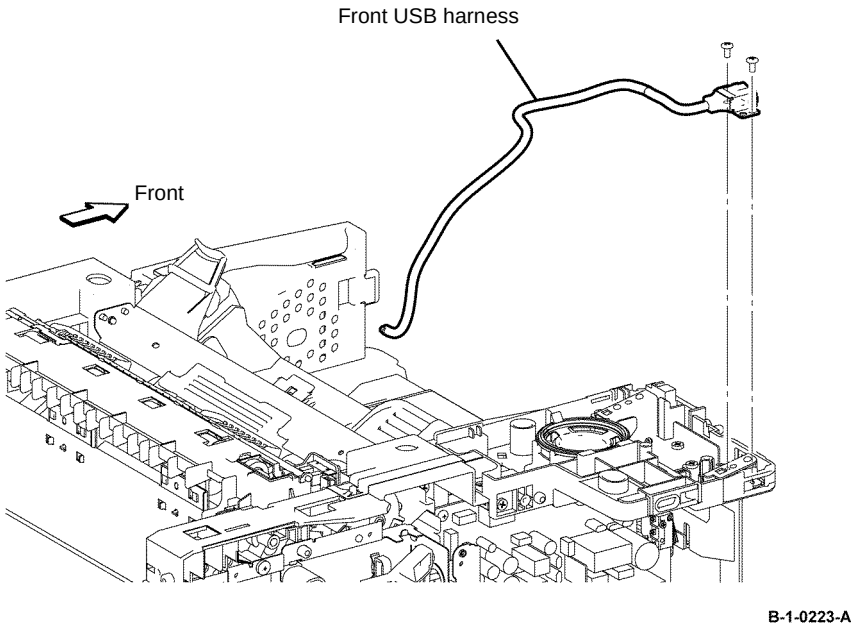

Figure 2 Front USB harness removal

Replacement

The replacement is the reverse of the removal procedure.

REP 18.11 Inlet Harness Assembly B405

Parts List on PL 18.3B

Removal

WARNING

Switch off the electricity to the machine, GP 10. Disconnect the power cord from the customer supply while performing tasks that do not need electricity. Electricity can cause death or injury. Moving parts can cause injury.

WARNING

Take care during this procedure. Sharp edges may be present that can cause injury.

1. Open the MSI cover, PL 13.2 Item 99.
2. Pull out the MSI tray assembly, PL 13.2 Item 9.
3. Remove the front cover assembly, REP 19.1.
4. Remove the rear cover assembly, REP 19.13.
5. Remove the ESS window cover assembly, REP 19.3.
6. Remove the WIFI cap cover, REP 19.19.
7. Remove the left cover, REP 19.11.
8. Remove the ESS PWB, REP 18.1.
9. Remove six screws (silver, M3, 6mm), one screw (silver, tapping, M4, 10mm), one screw (sliver, M4, 8mm) and one screw (silver, tapping, 10mm), that fix the ESS housing. Release the two tabs from the frame, then remove the ESS housing from the printer, Figure 1.

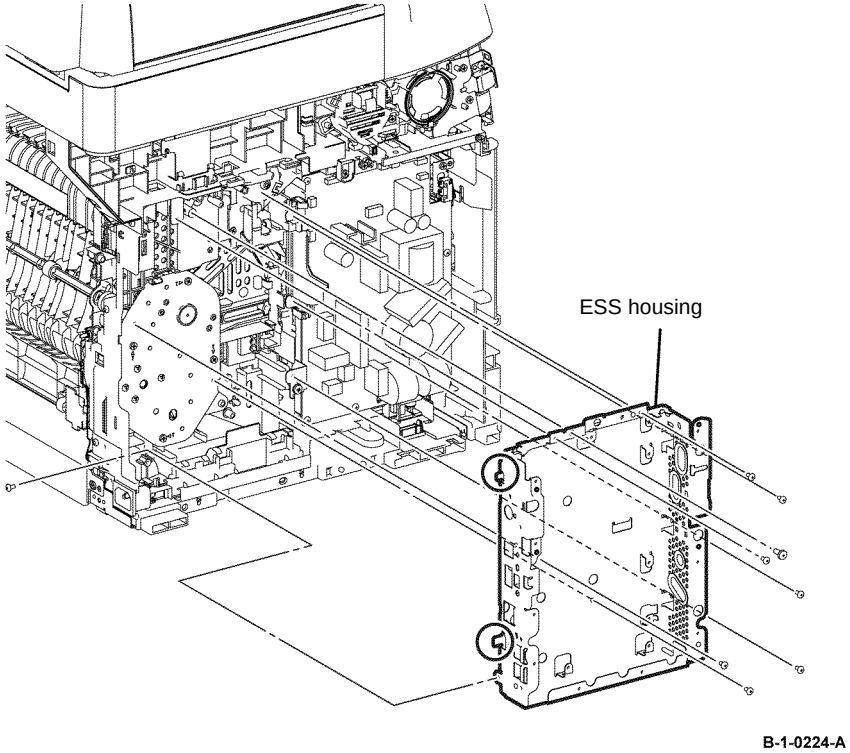

Figure 1 ESS housing removal

10. Remove one screw (silver, M4, 6mm) that fixes the earth wire. Disconnect P/J200 from the LVPS PWB, then remove the inlet harness assembly, Figure 2.

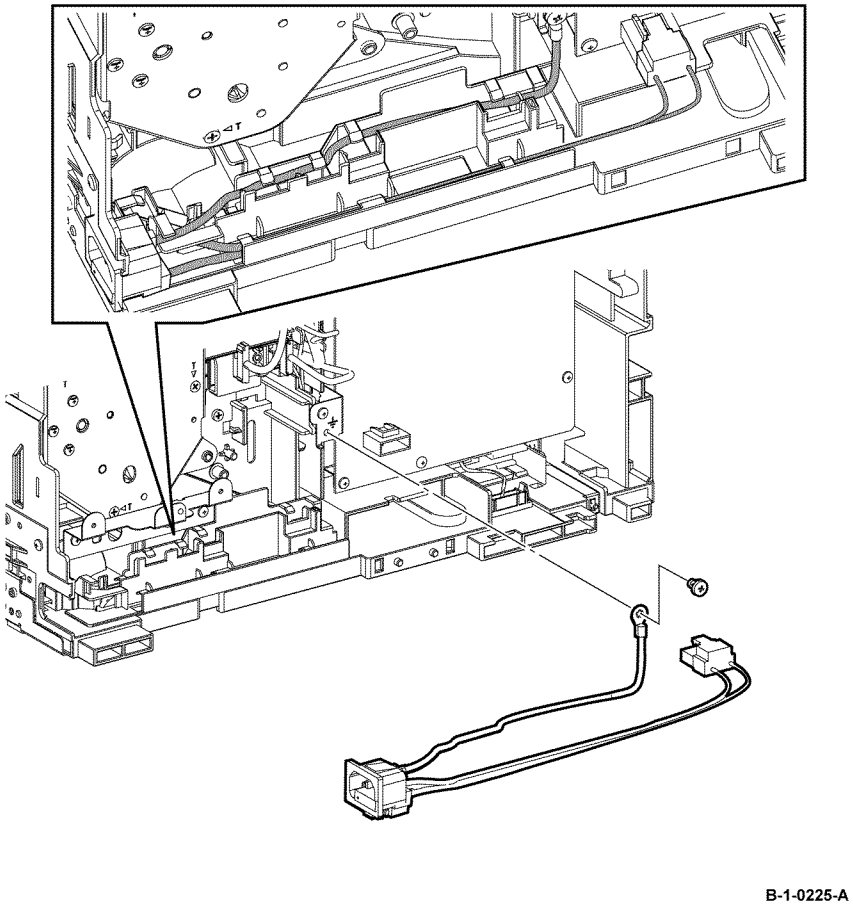

Figure 2 Inlet harness assembly removal

Replacement

CAUTION

When installing a wiring harness, ensure the new harness follows same routing as the old harness. Check that the harness is properly seated in the harness guides, ensure the harness is not trapped when the cover is closed and that no unnecessary slack is present. Ensure that the harness does not contact moving parts.

The replacement is the reverse of the removal procedure.

REP 18.12 Inlet Harness Assembly B400

Parts List on PL 18.3A

Removal

WARNING

Switch off the electricity to the machine, GP 10. Disconnect the power cord from the customer supply while performing tasks that do not need electricity. Electricity can cause death or injury. Moving parts can cause injury.

WARNING

Take care during this procedure. Sharp edges may be present that can cause injury.

1. Open the MSI cover, PL 13.2 Item 99.
2. Pull out the MSI tray assembly, PL 13.2 Item 9.
3. Remove the front cover assembly, REP 19.2.
4. Remove the rear cover assembly, REP 19.14.
5. Remove the UI console assembly, REP 1.3.
6. Remove the exit top cover assembly, REP 19.10.
7. Remove the WIFI cap cover, REP 19.20.
8. Remove the ESS window cover assembly, REP 19.4.
9. Remove the front/left UI cover assembly, REP 1.4.
10. Remove the left cover, REP 19.12.
11. Remove the ESS PWB, REP 18.2.
12. Remove six screws (silver, M3, 6mm), one screw (silver, tapping, M4, 10mm), that fix the ESS housing. Release the two tabs from the frame, then remove the ESS housing from the printer, Figure 1.

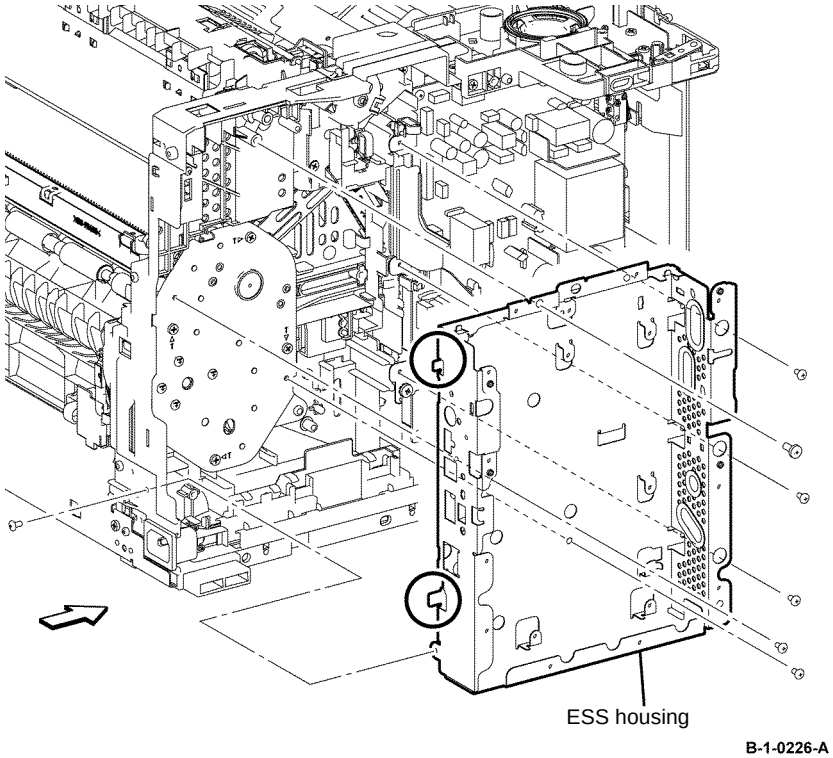

Figure 1 ESS housing removal

13. Remove one screw (silver, M4, 5mm) that fixes the earth wire. Disconnect PJ200 from the LVPS PWB. Release both sides of the hook of the power switch, then remove the inlet harness assembly, Figure 2.

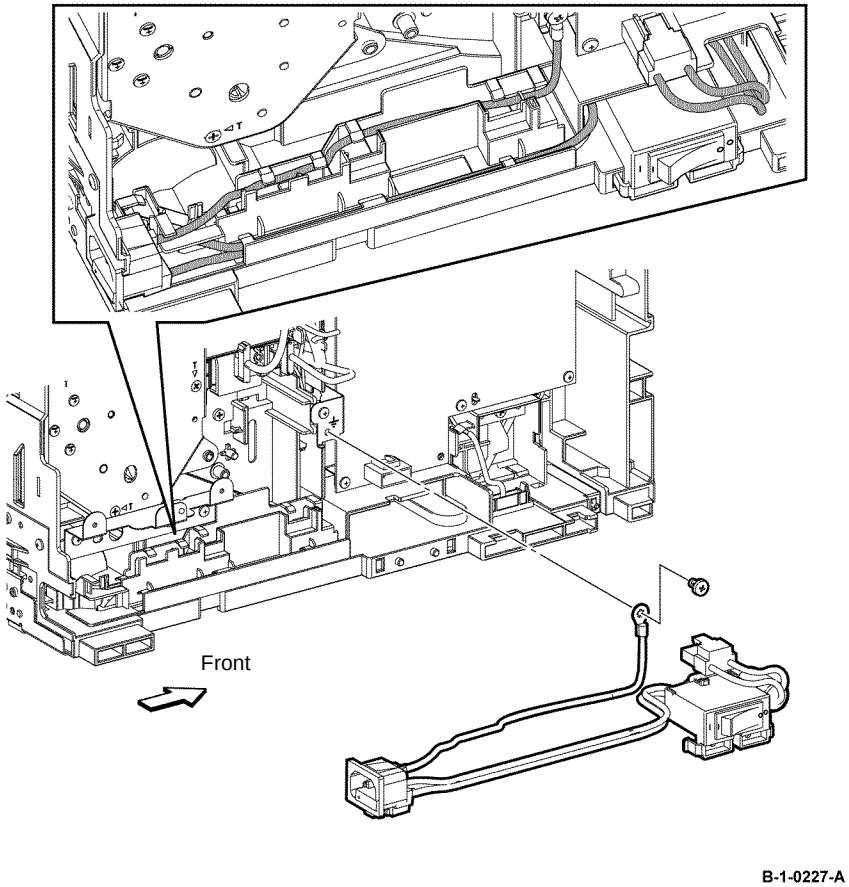

Figure 2 Inlet harness assembly removal

Replacement

CAUTION

When installing a wiring harness, ensure the new harness follows same routing as the old harness. Check that the harness is properly seated in the harness guides, ensure the harness is not trapped when the cover is closed and that no unnecessary slack is present. Ensure that the harness does not contact moving parts.

The replacement is the reverse of the removal procedure.

REP 18.13 Front Interlock Switch Assembly B405

Parts List on PL 18.1B

Removal

WARNING

Switch off the electricity to the machine, GP 10. Disconnect the power cord from the customer supply while performing tasks that do not need electricity. Electricity can cause death or injury. Moving parts can cause injury.

WARNING

Take care during this procedure. Sharp edges may be present that can cause injury.

1. Open the MSI cover, PL 13.2 Item 99.
2. Pull out the MSI tray assembly, PL 13.2 Item 9.
3. Remove the front cover assembly, REP 19.1.
4. Remove the rear cover assembly, REP 19.13.
5. Remove the ESS window cover assembly, REP 19.3.
6. Remove the WIFI cap cover, REP 19.19.
7. Remove the left cover, REP 19.11.
8. Remove the LVPS PWB, REP 18.7.
9. Remove two screws (silver, tapping, 8mm), then remove the front interlock switch assembly, Figure 1.

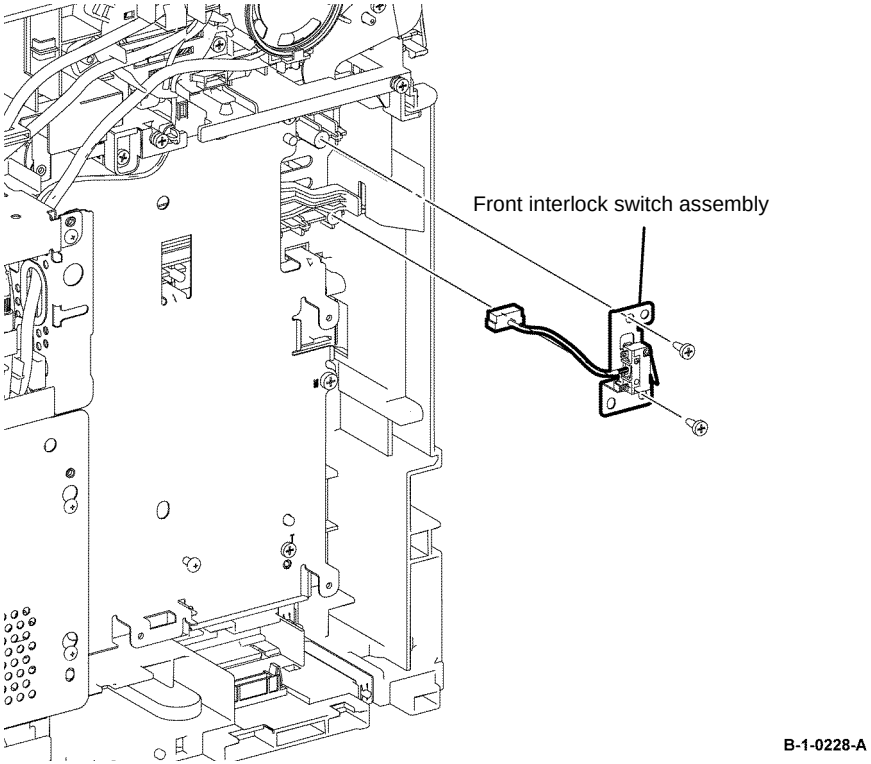

Figure 1 Front interlock switch assembly removal

Replacement

The replacement is the reverse of the removal procedure.

REP 18.14 Front Interlock Switch Assembly B400

Parts List on PL 18.1A

Removal

WARNING

Switch off the electricity to the machine, GP 10. Disconnect the power cord from the customer supply while performing tasks that do not need electricity. Electricity can cause death or injury. Moving parts can cause injury.

WARNING

Take care during this procedure. Sharp edges may be present that can cause injury.

1. Open the MSI cover, PL 13.2 Item 99.
2. Pull out the MSI tray assembly, PL 13.2 Item 9.
3. Remove the front cover assembly, REP 19.2.
4. Remove the rear cover assembly, REP 19.14.
5. Remove the UI console assembly, REP 1.3.
6. Remove the exit top cover assembly, REP 19.10.
7. Remove the WIFI cap cover, REP 19.20.
8. Remove the ESS window cover assembly, REP 19.4.
9. Remove the front/left UI cover assembly, REP 1.4.
10. Remove the left cover, REP 19.12.
11. Remove the LVPS PWB, REP 18.8.
12. Remove two screws (silver, tapping, 8mm), then remove the front interlock switch assembly, Figure 1.

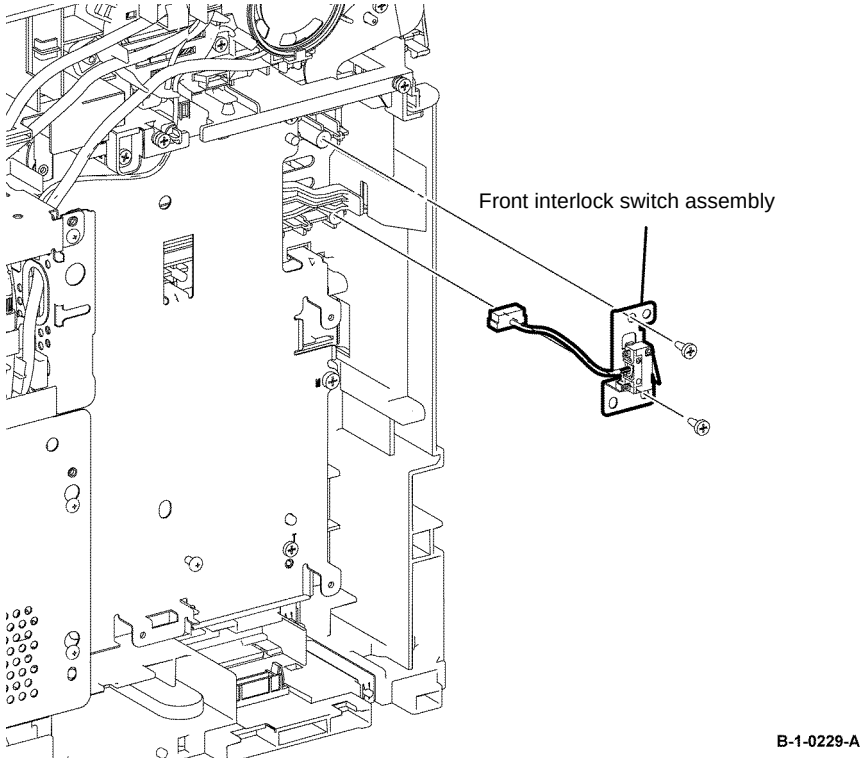

Figure 1 Front interlock switch assembly removal

Replacement

The replacement is the reverse of the removal procedure.

REP 18.15 Hard Disk Drive (HDD)

Parts List on PL 18.1A

Removal

WARNING

Switch off the electricity to the machine GP 10. Disconnect the power cord from the customer supply while performing tasks that do not need electricity. Electricity can cause death or injury. Moving parts can cause injury.

CAUTION

Xerox does not recommend removal of the hard disk unless it is defective or the device is being returned to Xerox. If the hard disk is thought to be defective, before removal, first create a clone file of the hard disk data, GP 13. Once the hard disk is removed a factory initialization from the special boot menu will be required, GP 25.

1. Remove the ESS window cover assembly, REP 19.4 (B400) or REP 19.3 (B405).
2. Disconnect P/J302 and P/J310, then remove the option HDD, Figure 1.

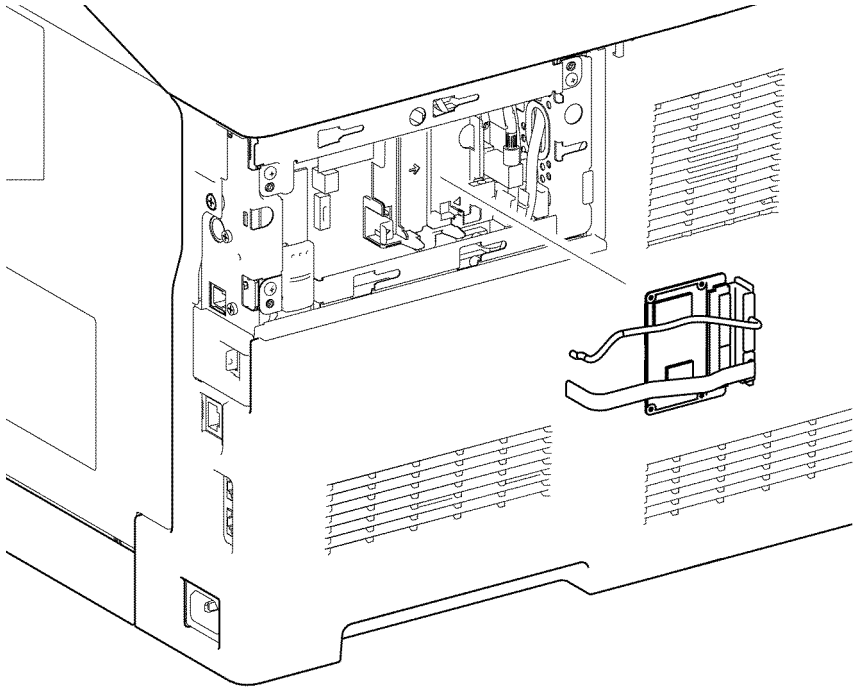

B-1-0366-A

Figure 1 HDD removal

Replacement

1. If no drive is to be installed: perform 02. FACTORY INIT MODE, GP 25 Special Boot Modes.
2. Replacement is the reverse of the removal procedure.
3. If a new hard drive is installed: perform 04. HDD FORMAT MODE, GP 25 Special Boot Modes, then install the clone file saved at the start of this procedure.

REP 19.1 Front Cover Assembly B405

Parts List on PL 19.1B

Removal

WARNING

Switch off the electricity to the machine, GP 10. Disconnect the power cord from the customer supply while performing tasks that do not need electricity. Electricity can cause death or injury. Moving parts can cause injury.

1. Open the MSI cover, PL 13.2 Item 99.
2. Pull out the MSI tray assembly, PL 13.2 Item 9.
3. Open the front cover assembly. Release the hooks on the right and left front links, Figure 1.
4. Remove the front cover assembly by flexing it to release one of the bosses from the hole, Figure 1.

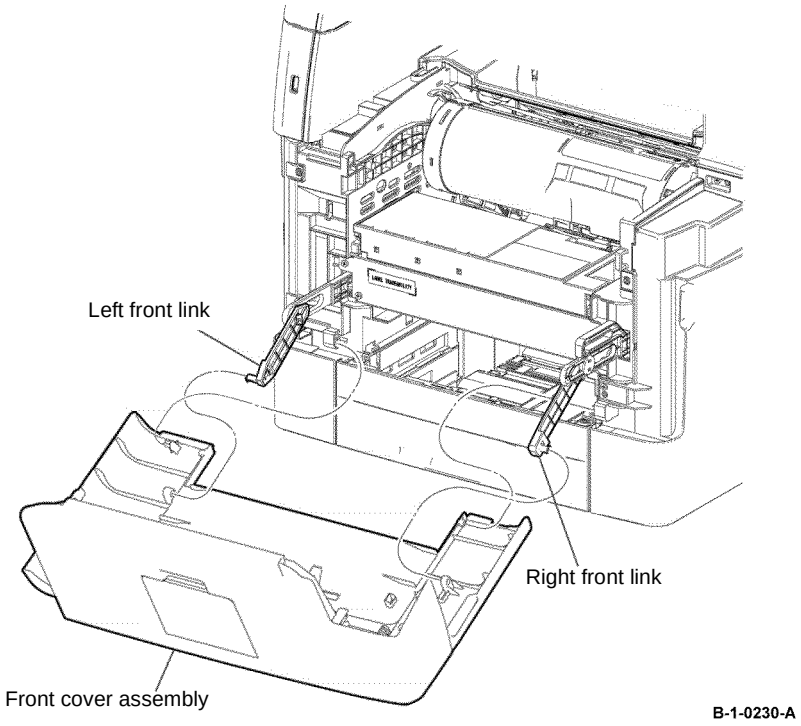

Figure 1 Front cover assembly removal

5. Remove two screws (silver, tapping, 8mm) that fix the front cover to the top front cover, then remove the front cover, by releasing the two bosses, Figure 2.

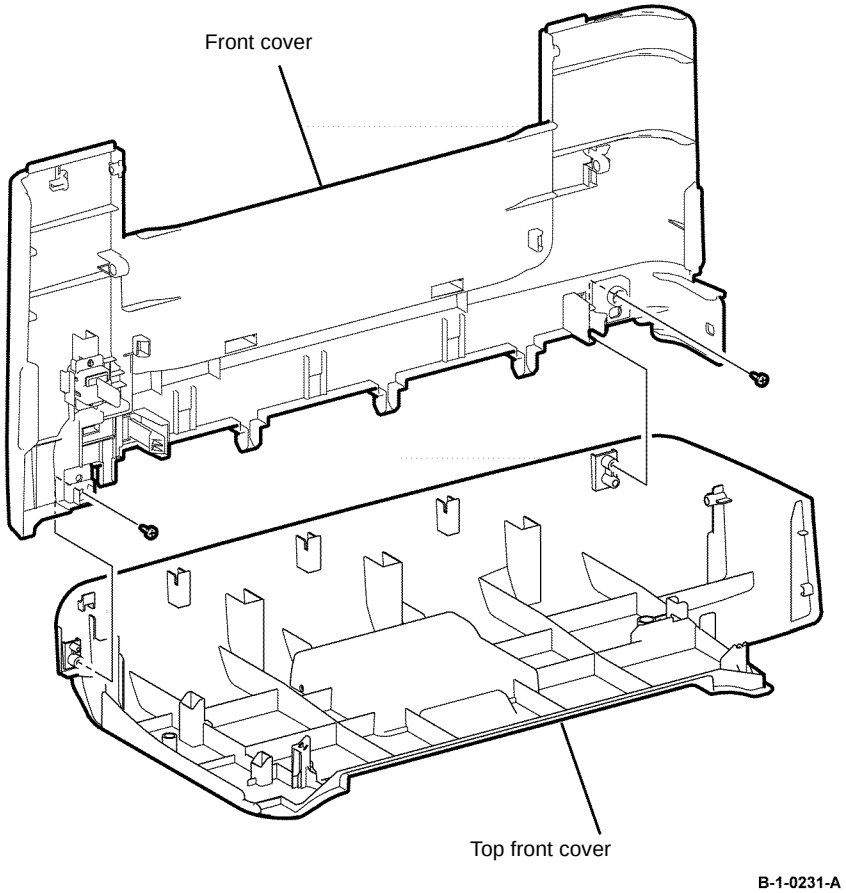

Figure 2 Front cover removal

Replacement

The replacement is the reverse of the removal procedure.

REP 19.2 Front Cover Assembly B400

Parts List on PL 19.1A

Removal

WARNING

Switch off the electricity to the machine, GP 10. Disconnect the power cord from the customer supply while performing tasks that do not need electricity. Electricity can cause death or injury. Moving parts can cause injury.

1. Open the MSI cover, PL 13.2 Item 99.
2. Pull out the MSI tray assembly, PL 13.2 Item 9.
3. Open the front cover assembly. Release the hooks on the right and left front links, Figure 1.
4. Remove the front cover assembly by flexing it to release one of the bosses from the hole, Figure 1.

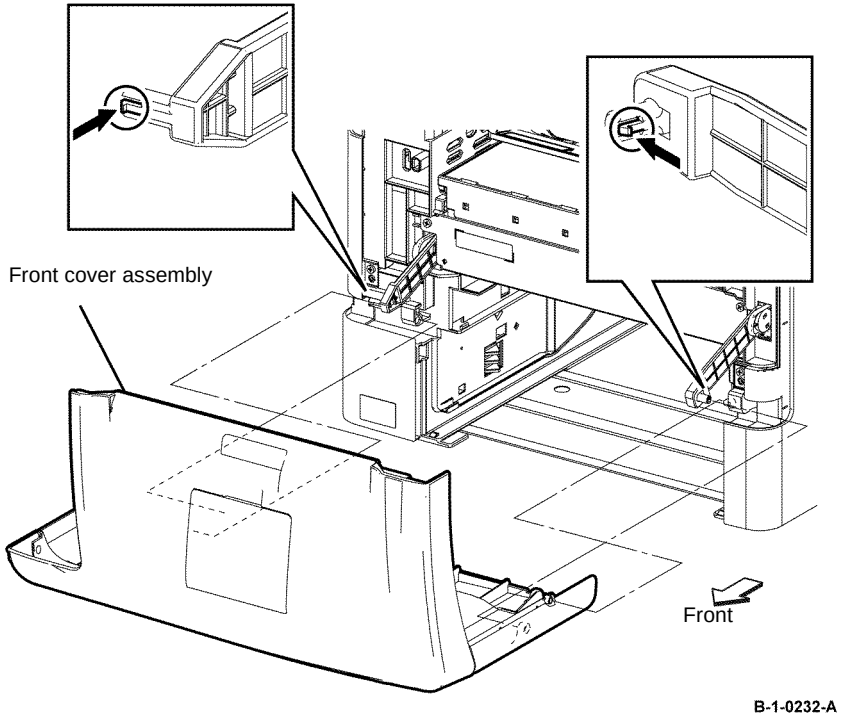

Figure 1 Front cover assembly removal

5. Remove two screws (silver, tapping, 8mm) that fix the front cover to the top front cover, then remove the front cover, by releasing the two bosses, Figure 2.

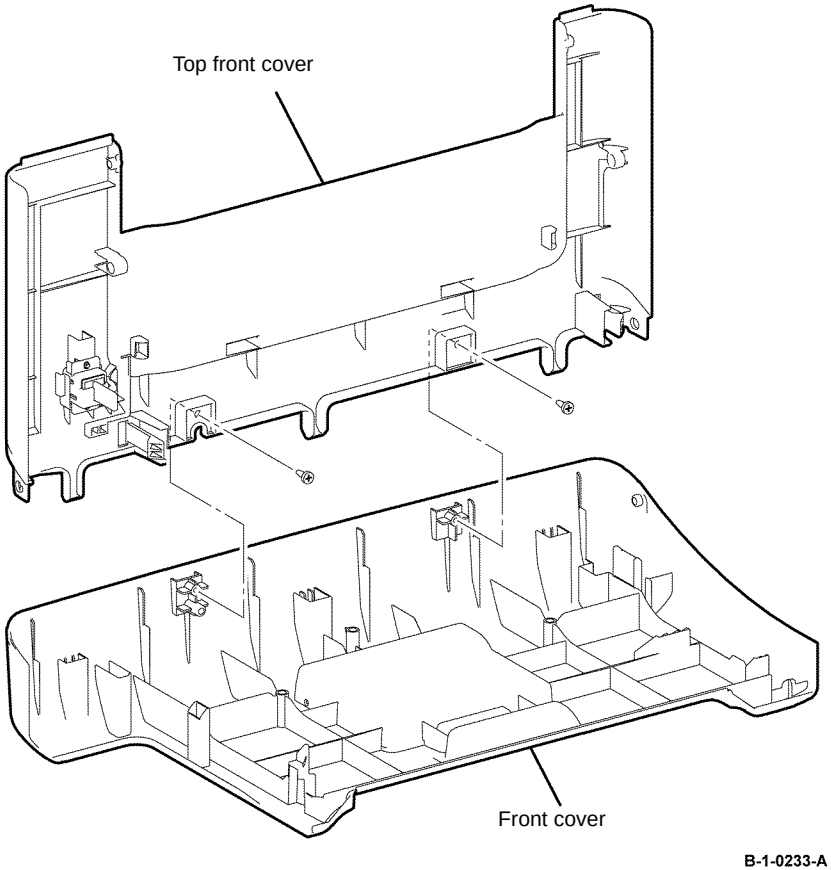

Figure 2 Front cover removal

Replacement

The replacement is the reverse of the removal procedure.

REP 19.3 ESS Window Cover Assembly B405

Parts List on PL 19.2B

Removal

WARNING

Switch off the electricity to the machine, GP 10. Disconnect the power cord from the customer supply while performing tasks that do not need electricity. Electricity can cause death or injury. Moving parts can cause injury.

1. Loosen the thumb screw that fixes the ESS window cover assembly, then remove the ESS window cover assembly from the printer, Figure 1.

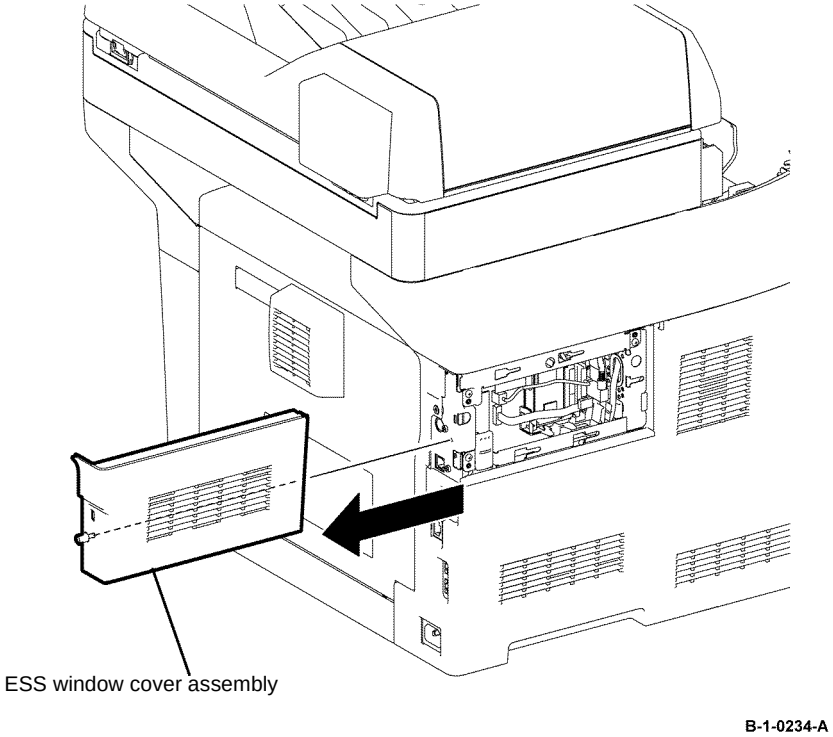

Figure 1 ESS window cover assembly removal

Replacement

The replacement is the reverse of the removal procedure.

REP 19.4 ESS Window Cover Assembly B400

Parts List on PL 19.2A

Removal

WARNING

Switch off the electricity to the machine, GP 10. Disconnect the power cord from the customer supply while performing tasks that do not need electricity. Electricity can cause death or injury. Moving parts can cause injury.

1. Loosen the thumb screw that fixes the ESS window cover assembly, then remove the ESS window cover assembly from the printer, Figure 1.

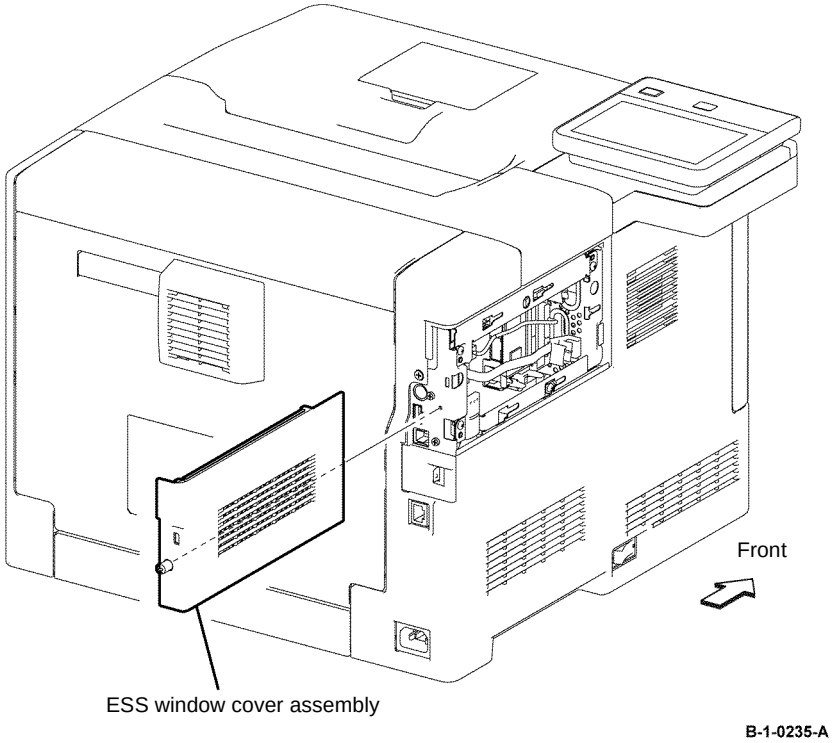

Figure 1 ESS window cover assembly removal

Replacement

The replacement is the reverse of the removal procedure.

REP 19.5 Cover Extension B405

Parts List on PL 19.1B

Removal

WARNING

Switch off the electricity to the machine, GP 14. Disconnect the power cord from the customer supply while performing tasks that do not need electricity. Electricity can cause death or injury. Moving parts can cause injury.

1. Remove the cover extension assembly by flexing it to release one of the bosses from the hole, Figure 1.

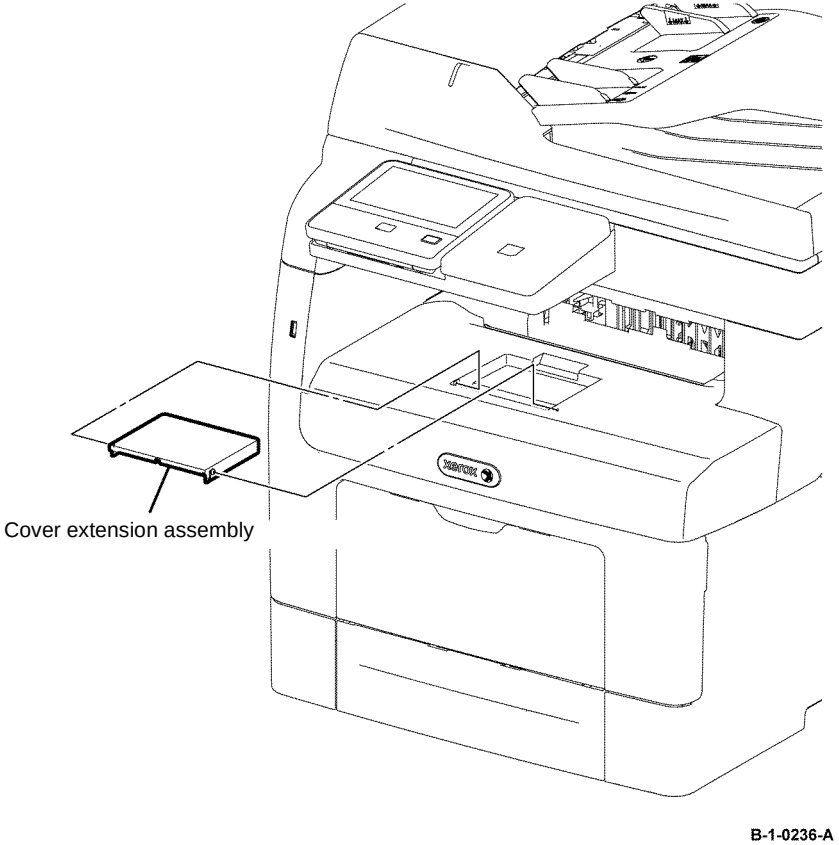

Figure 1 Cover extension assembly removal

2. Remove the second cover extension from the from the cover extension by flexing the second cover extension to release one of the bosses from the hole, Figure 2.

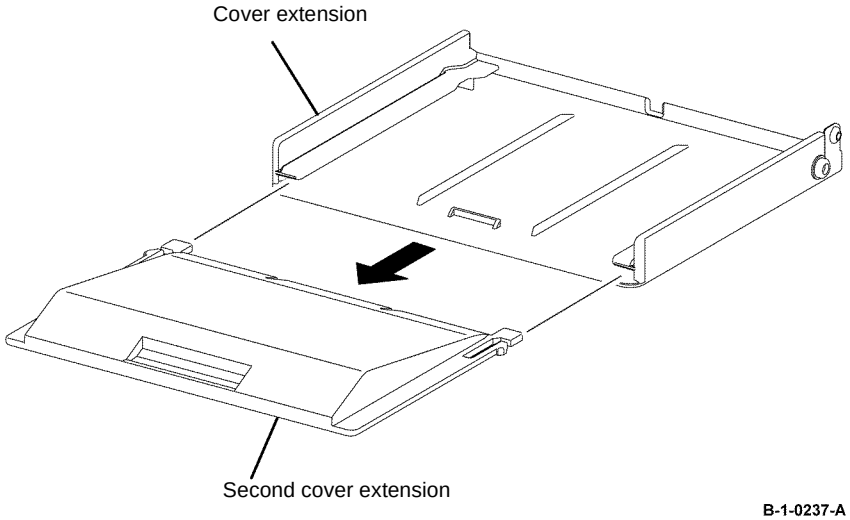

Figure 2 Second cover extension removal

Replacement

The replacement is the reverse of the removal procedure.

REP 19.6 Cover Extension B400

Parts List on PL 19.1A

Removal

WARNING

Switch off the electricity to the machine, GP 10. Disconnect the power cord from the customer supply while performing tasks that do not need electricity. Electricity can cause death or injury. Moving parts can cause injury.

1. Remove the cover extension assembly by flexing it to release one of the bosses from the hole, Figure 1.

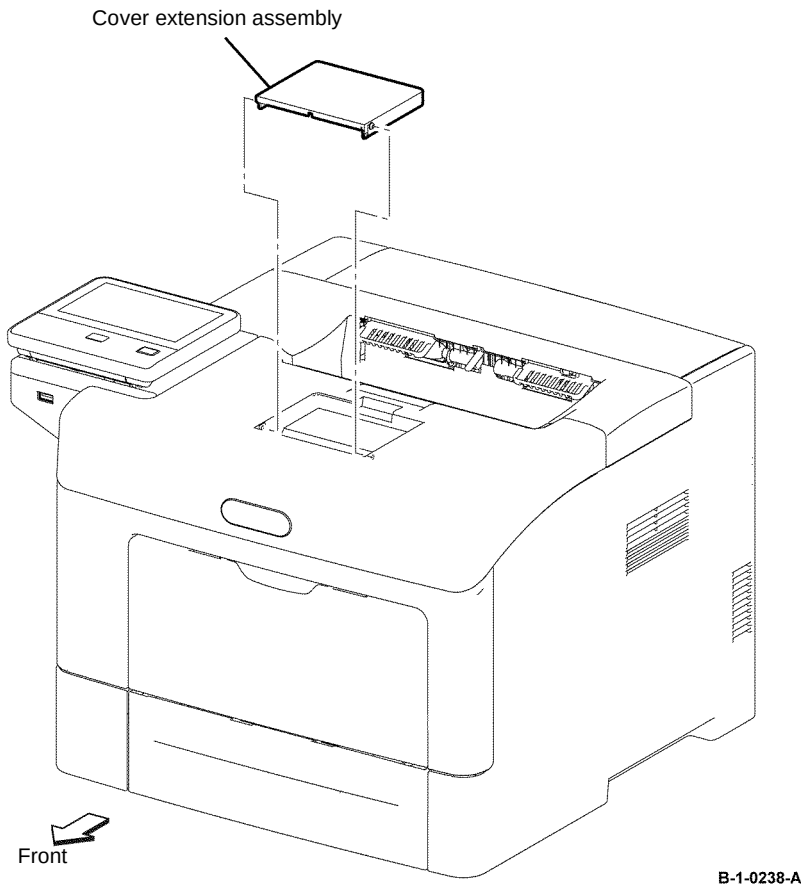

Figure 1 Cover extension assembly removal

2. Remove the second cover extension from the from the cover extension by flexing the second cover extension to release one of the bosses from the hole, Figure 2.

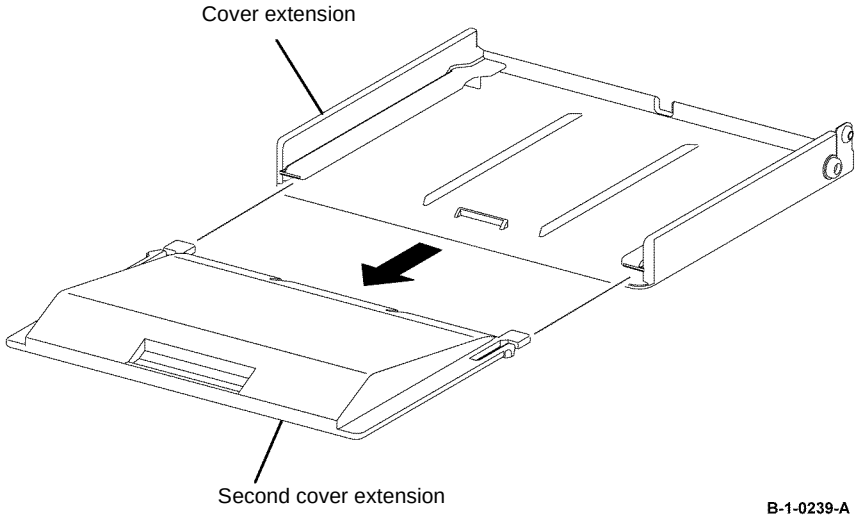

Figure 2 Second cover extension removal

Replacement

The replacement is the reverse of the removal procedure.

REP 19.7 Right Cover B405

Parts List on PL 19.1B

Removal

WARNING

Switch off the electricity to the machine, GP 10. Disconnect the power cord from the customer supply while performing tasks that do not need electricity. Electricity can cause death or injury. Moving parts can cause injury.

1. Open the MSI cover, PL 13.2 Item 99.
2. Pull out the MSI tray assembly, PL 13.2 Item 9.
3. Remove the front cover assembly, REP 19.1.
4. Remove the rear-cover assembly, REP 19.13.
5. Remove one screw (silver, tapping, 8mm) that fixes the scanner outer right cover. Release one hook, then remove the scanner outer right cover, Figure 1.

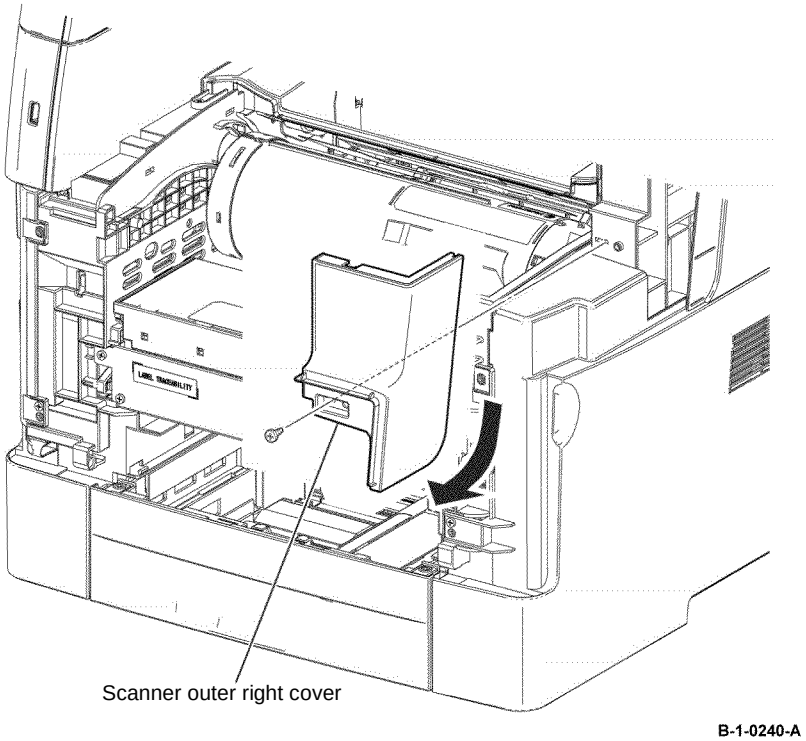

Figure 1 Scanner outer right cover removal

6. Remove three screws (silver, tapping, 8mm) that fix the right cover. Release four holes from the bosses on the frame. Release two hooks, then remove the right cover, Figure 2.

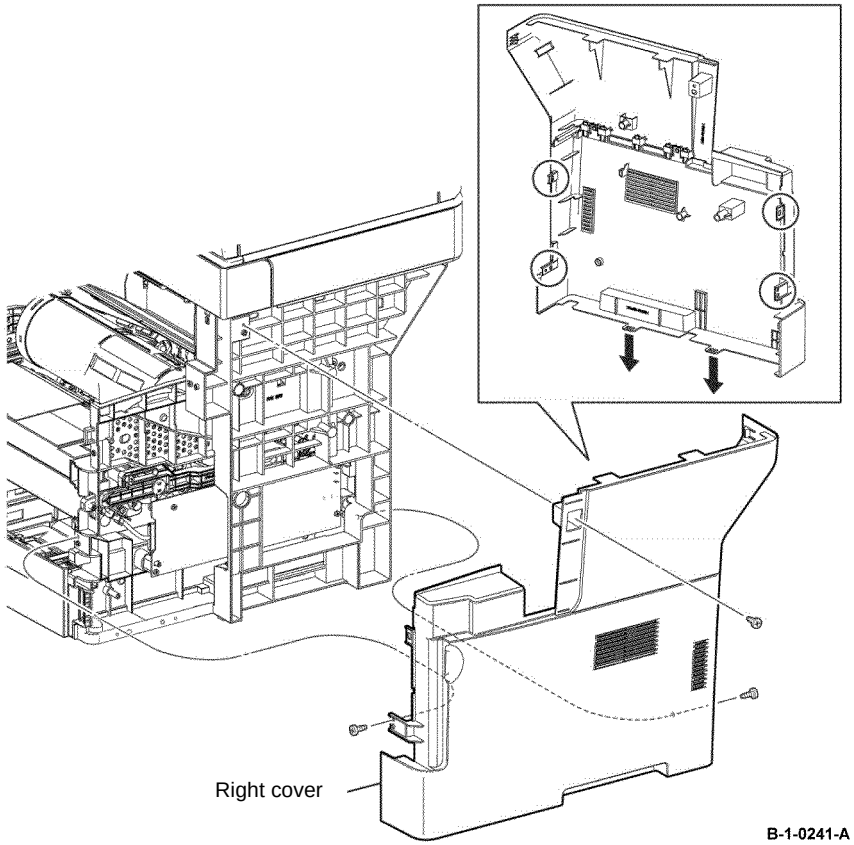

Figure 2 Right cover assembly removal

Replacement

The replacement is the reverse of the removal procedure.

REP 19.8 Right Cover B400

Parts List on PL 19.1A

Removal

WARNING

Switch off the electricity to the machine, GP 10. Disconnect the power cord from the customer supply while performing tasks that do not need electricity. Electricity can cause death or injury. Moving parts can cause injury.

1. Open the MSI cover, PL 13.2 Item 99.
2. Pull out the MSI tray assembly, PL 13.2 Item 9.
3. Remove the front cover assembly, REP 19.2.
4. Remove the rear-cover assembly, REP 19.14.
5. Remove the UI console assembly, REP 1.3.
6. Remove the exit top cover assembly, REP 19.10.
7. Remove two screws (silver, tapping, 8mm) that fixes the right cover, Figure 1.
8. Release four holes on the right cover from the bosses on the printer. Release two hooks, then remove the right cover, Figure 1.

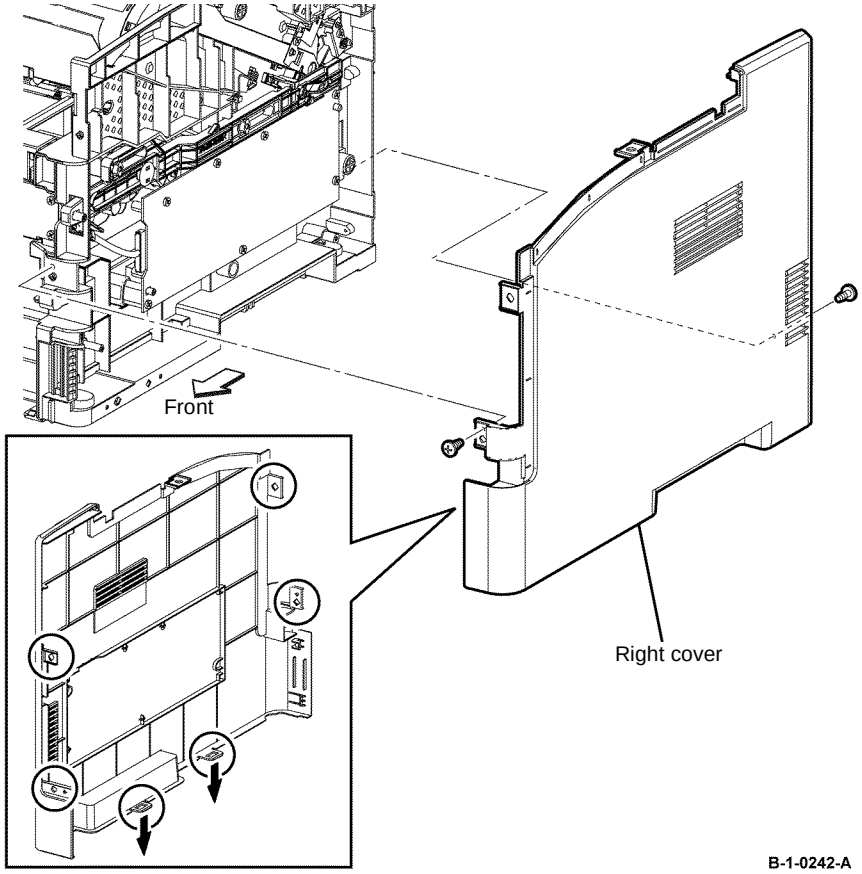

Figure 1 Right cover removal

Replacement

The replacement is the reverse of the removal procedure.

REP 19.9 Exit Top Cover Assembly B405

Parts List on PL 19.1B

Removal

WARNING

Switch off the electricity to the machine, GP 10. Disconnect the power cord from the customer supply while performing tasks that do not need electricity. Electricity can cause death or injury. Moving parts can cause injury.

1. Open the MSI cover, PL 13.2 Item 99.
2. Pull out the MSI tray assembly, PL 13.2 Item 9.
3. Remove the front cover assembly, REP 19.1.
4. Remove the rear-cover assembly, REP 19.13.
5. Remove the right cover assembly, REP 19.7.
6. Release the hooks that fix the scanner inner right cover, then slide it out of the printer, Figure 1.

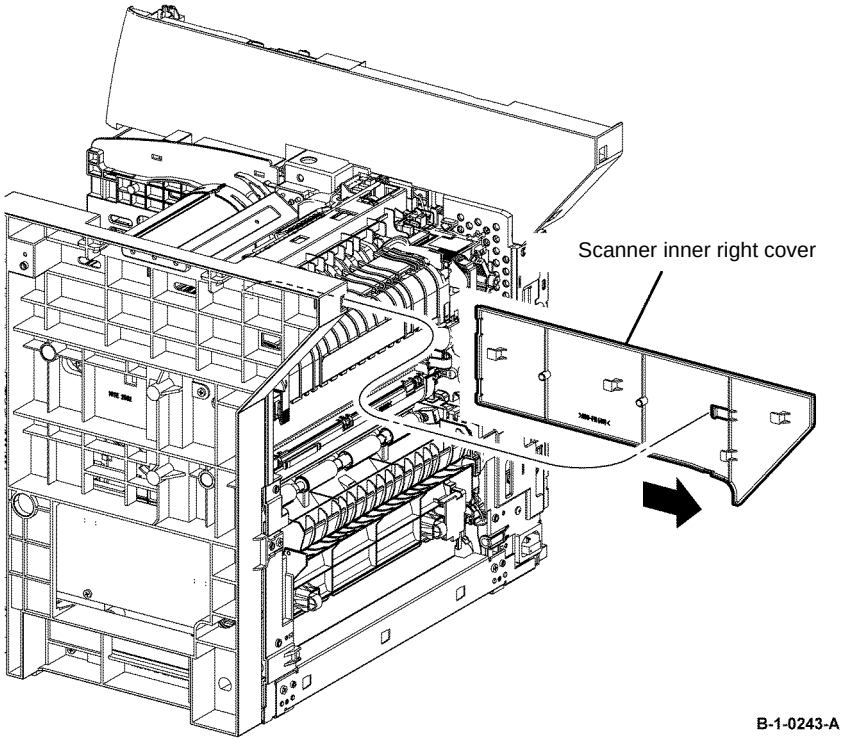

Figure 1 Scanner inner right cover removal

7. Remove two screws (silver, tapping, 8mm), then remove the exit top cover assembly, Figure 2.

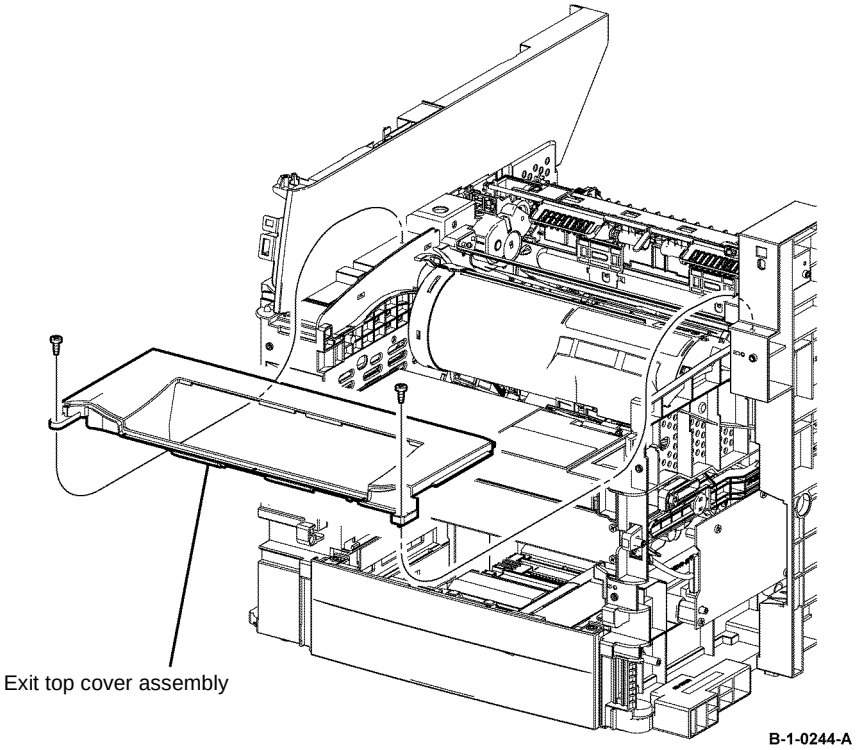

Figure 2 Exit top cover assembly removal

Replacement

The replacement is the reverse of the removal procedure.

REP 19.10 Exit Top Cover Assembly B400

Parts List on PL 19.1A

Removal

WARNING

Switch off the electricity to the machine, GP 10. Disconnect the power cord from the customer supply while performing tasks that do not need electricity. Electricity can cause death or injury. Moving parts can cause injury.

1. Open the MSI cover, PL 13.2 Item 99.
2. Pull out the MSI tray assembly, PL 13.2 Item 9.
3. Remove the front cover assembly, REP 19.2.
4. Remove the rear-cover assembly, REP 19.14.
5. Remove the right cover assembly, REP 19.8.
6. Remove the UI console assembly, REP 1.3.
7. Remove two screws (silver, tapping, 8mm), then remove the exit top cover assembly, Figure 1.

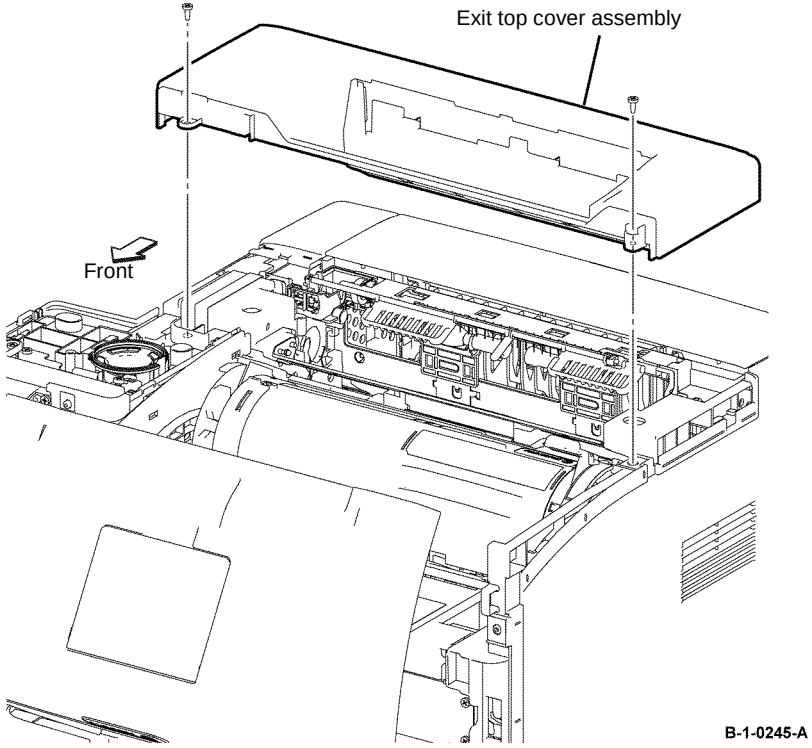

Figure 1 Exit top cover assembly removal

Replacement

The replacement is the reverse of the removal procedure.

REP 19.11 Left Cover B405

Parts List on PL 19.2B

Removal

WARNING

Switch off the electricity to the machine, GP 10. Disconnect the power cord from the customer supply while performing tasks that do not need electricity. Electricity can cause death or injury. Moving parts can cause injury.

1. Open the MSI cover, PL 13.2 Item 99.
2. Pull out the MSI tray assembly, PL 13.2 Item 9.
3. Remove the front cover assembly, REP 19.1.
4. Remove the rear-cover assembly, REP 19.13.
5. Remove the ESS window cover assembly, REP 19.3.
6. Remove the WIFI cap cover, REP 19.19.
7. Release eleven hooks, then remove the scanner left cover, Figure 1.

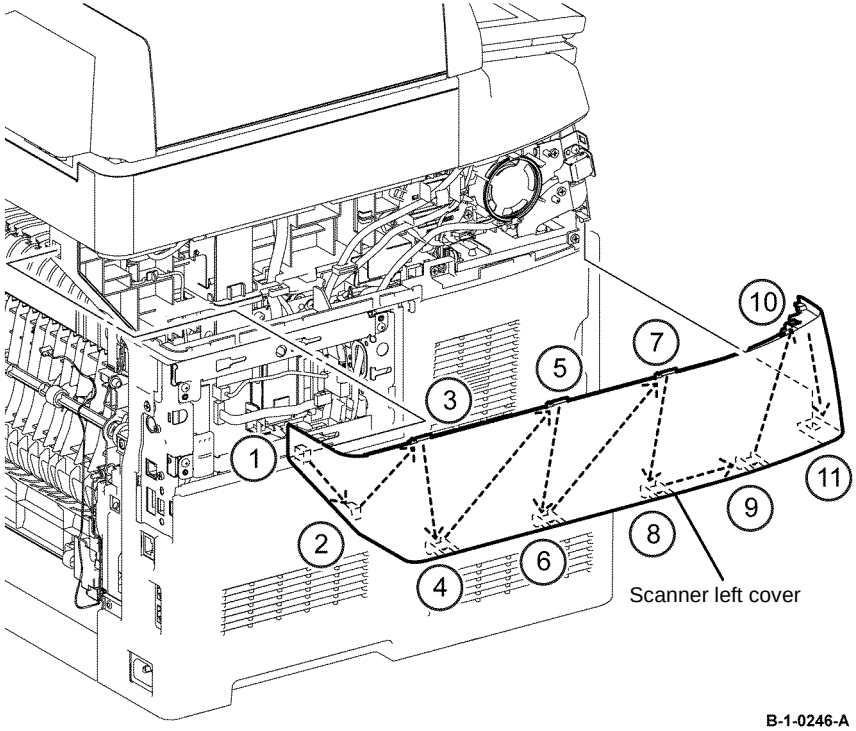

Figure 1 Scanner left cover removal

8. Remove five screws (silver, tapping, 8mm), (silver, M4, 6mm) that fix the left cover, Figure 2.
9. Disconnect PJ241 from the LVPS PWB, then release the harness clamp from the printer, Figure 2.

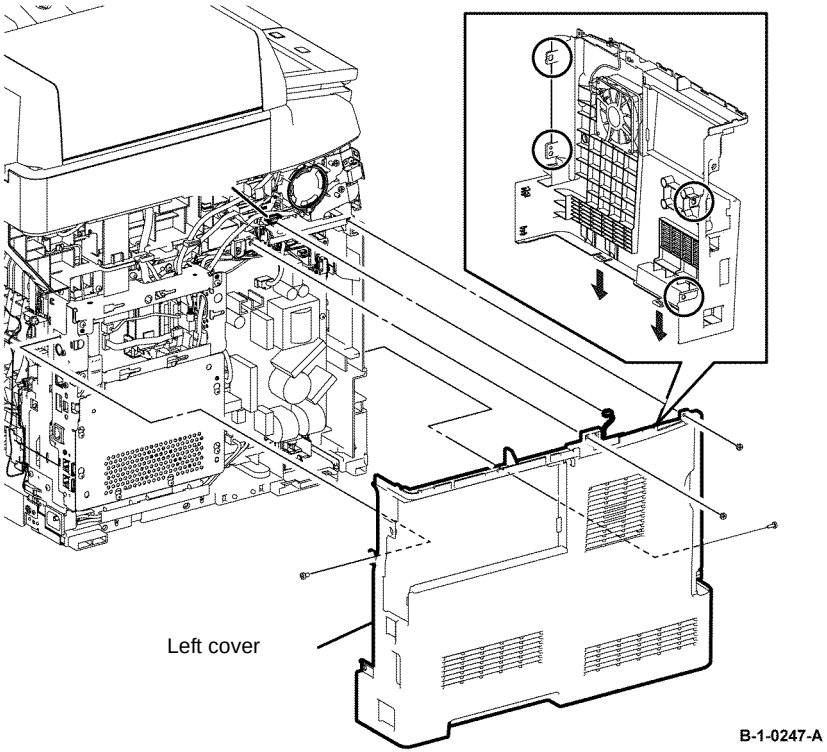

Figure 2 Left cover removal

Replacement

The replacement is the reverse of the removal procedure.

REP 19.12 Left Cover B400

Parts List on PL 19.2A

Removal

WARNING

Switch off the electricity to the machine, GP 10. Disconnect the power cord from the customer supply while performing tasks that do not need electricity. Electricity can cause death or injury. Moving parts can cause injury.

1. Open the MSI cover, PL 13.2 Item 99.
2. Pull out the MSI tray assembly, PL 13.2 Item 9.
3. Remove the front cover assembly, REP 19.2.
4. Remove the rear-cover assembly, REP 19.14.
5. Remove the UI console assembly, REP 1.3.
6. Remove the exit top cover assembly, REP 19.10.
7. Remove the WIFI cap cover, REP 19.20.
8. Remove the ESS window cover assembly, REP 19.4.
9. Remove the front/left UI cover assembly, REP 1.4.
10. Remove two screws (silver, tapping, 8mm) and one screw (silver, M4, 6mm) that fix the left cover. Release four holes from the bosses on the frame. Release two hooks, then remove the left cover, Figure 1.
11. Disconnect PJ241 from the LVPS PWB, then release the harness clamp from the printer, Figure 1.

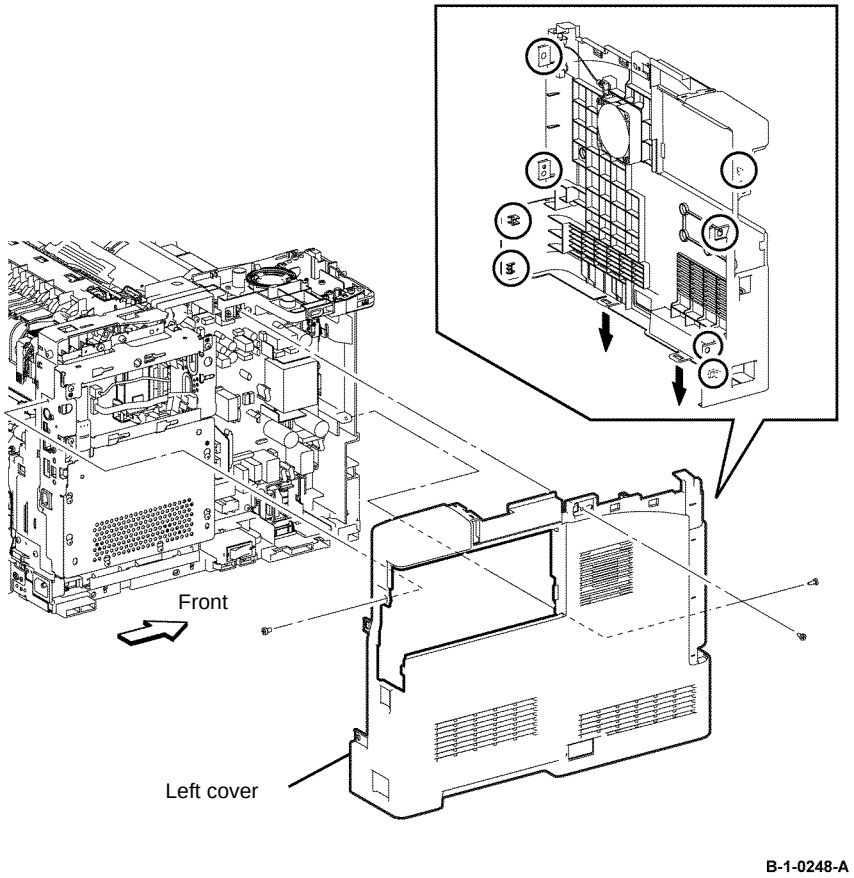

Figure 1 Left cover removal

Replacement

The replacement is the reverse of the removal procedure.

REP 19.13 Rear-Cover Assembly B405

Parts List on PL 19.2B

Removal

WARNING

Switch off the electricity to the machine, GP 10. Disconnect the power cord from the customer supply while performing tasks that do not need electricity. Electricity can cause death or injury. Moving parts can cause injury.

1. Open the rear-cover, PL 19.2B Item 10.
2. Release the one hook on the top-right corner that holds the connector cover, then remove the connector cover, Figure 1.
3. Disconnect PJ2401 from the rear-cover assembly, Figure 1.
4. Remove the stopper that fixes the rear-cover assembly, by rotating the stopper in the direction of the arrow, Figure 1.
5. Release the hook on the rear-cover assembly. Release one of the bosses from the hole on the printer, remove the DTS out earth spring, then remove the rear-cover assembly, Figure 1.

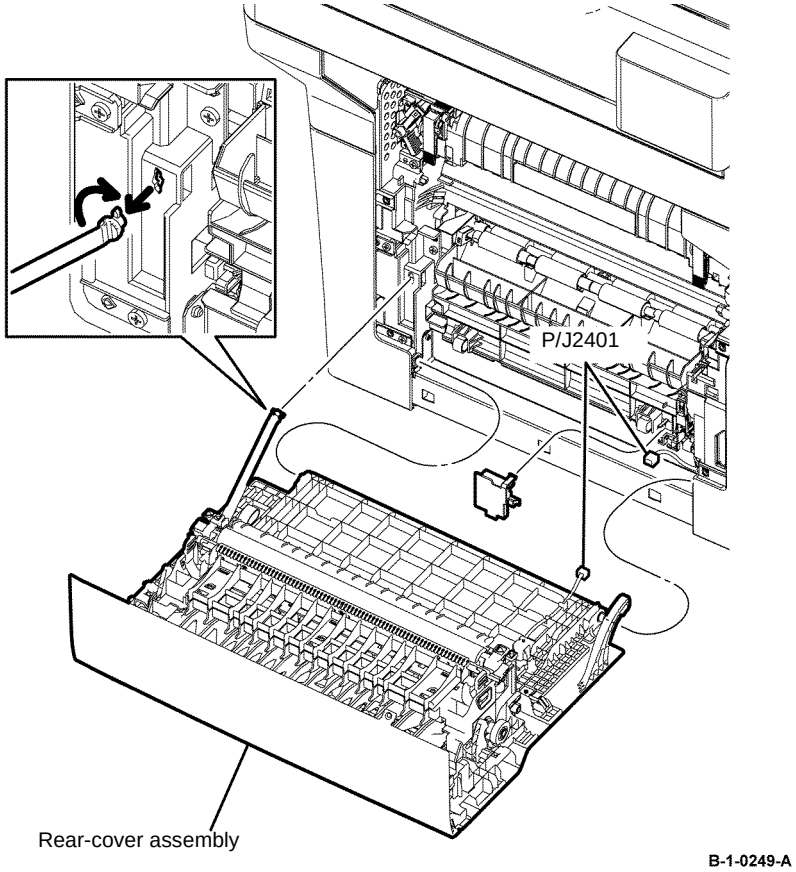

Figure 1 Rear-Cover Assembly Removal

Replacement

1. The replacement is the reverse of the removal procedure.
2. When installing the rear-cover assembly, ensure that DTS out earth spring is set in the hook of the printer, Figure 2.

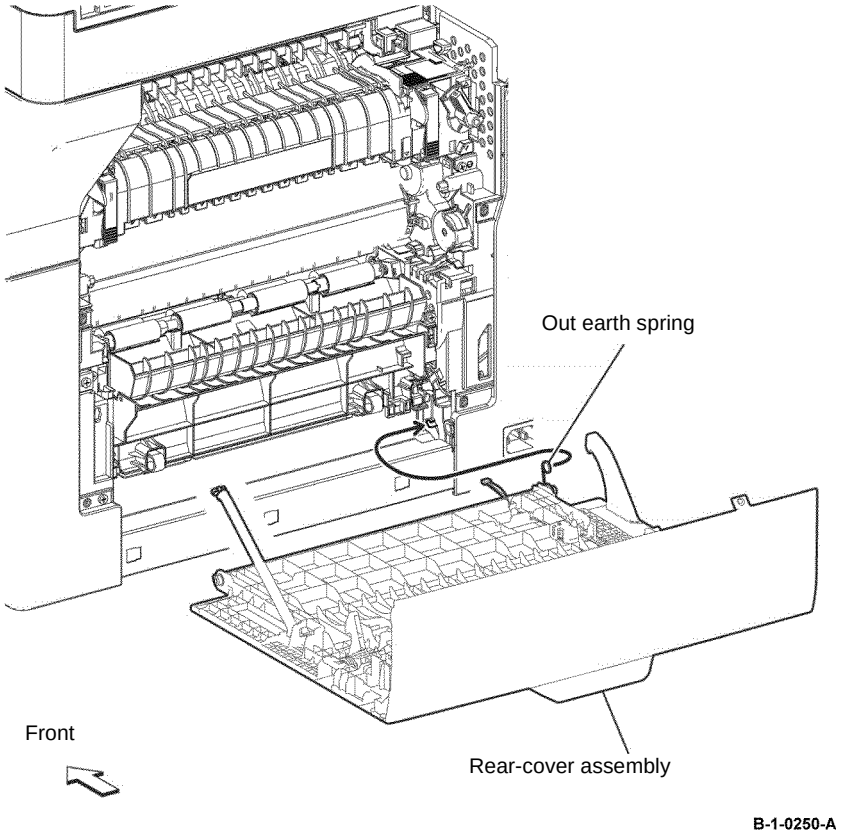

Figure 2 Rear-Cover Assembly Installation

REP 19.14 Rear-Cover Assembly B400

Parts List on PL 19.2A

Removal

WARNING

Switch off the electricity to the machine, GP 10. Disconnect the power cord from the customer supply while performing tasks that do not need electricity. Electricity can cause death or injury. Moving parts can cause injury.

1. Open the rear-cover, PL 19.2A Item 10.
2. Release the one hook on the top-right holds the connector cover, then remove the connector cover, Figure 1.
3. Disconnect P/J2401 from the rear-cover assembly, Figure 1.
4. Remove the stopper that fixes the rear-cover assembly, by rotating the stopper in the direction of the arrow, Figure 1.
5. Release the hook on the rear-cover assembly by releasing one of the bosses from the hole on the printer. Remove the DTS out earth spring, while removing the rear-cover assembly, Figure 1.

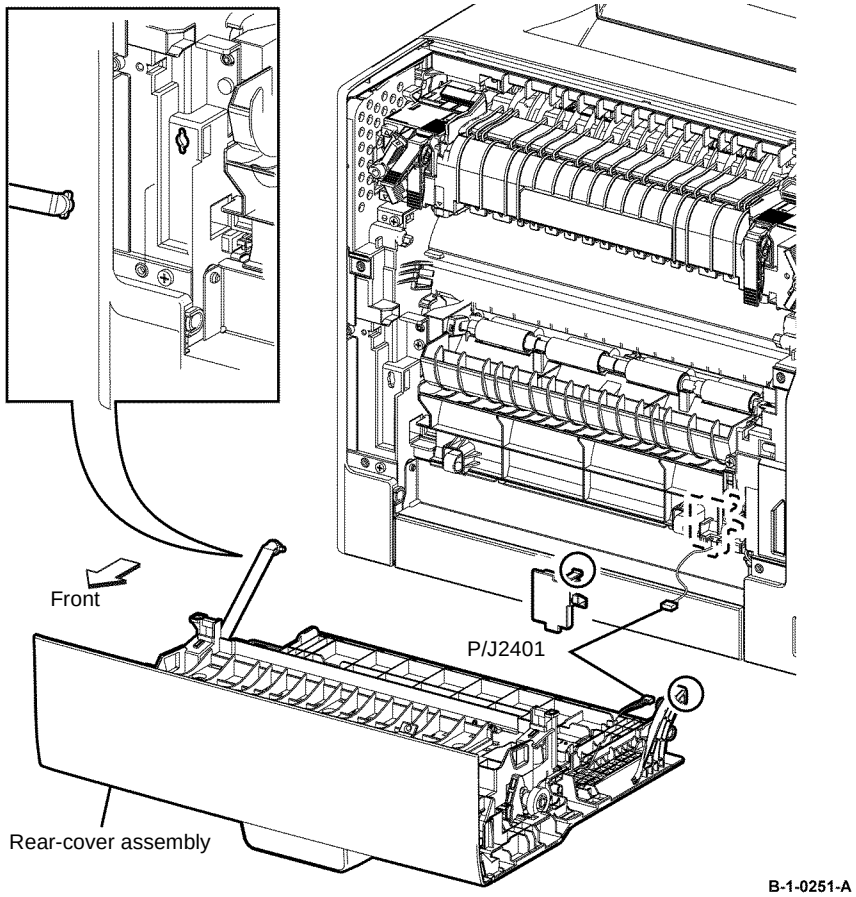

Figure 1 Rear-Cover Assembly Removal

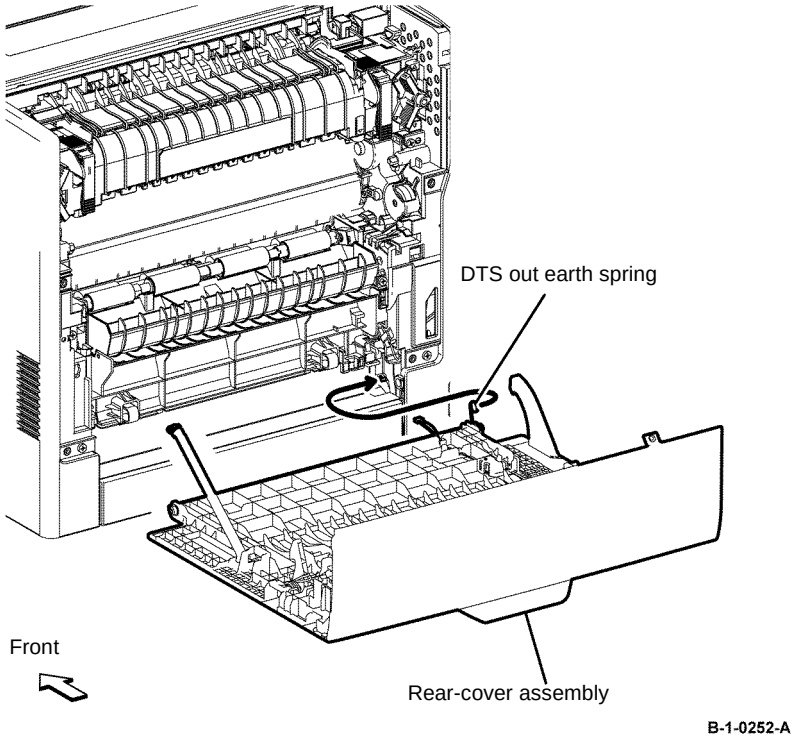

Figure 2 Rear-Cover Assembly Installation

Replacement

1. The replacement is the reverse of the removal procedure.
2. When installing the rear-cover assembly, ensure that DTS out earth spring is set in the hook of the printer, Figure 2.

REP 19.15 Rear Fan B405

Parts List on PL 19.3B

Removal

WARNING

Switch off the electricity to the machine, GP 10. Disconnect the power cord from the customer supply while performing tasks that do not need electricity. Electricity can cause death or injury. Moving parts can cause injury.

1. Remove the rear-cover assembly, REP 19.13.
2. Remove the transfer roll assembly, REP 6.1.
3. Remove the duplex chute assembly, REP 14.1.
4. Release two hooks, then remove the harness guide, Figure 1.
5. Release the two hooks that fix the duplex out chute. Release the four bosses from the holes, then remove the duplex out chute, Figure 1.

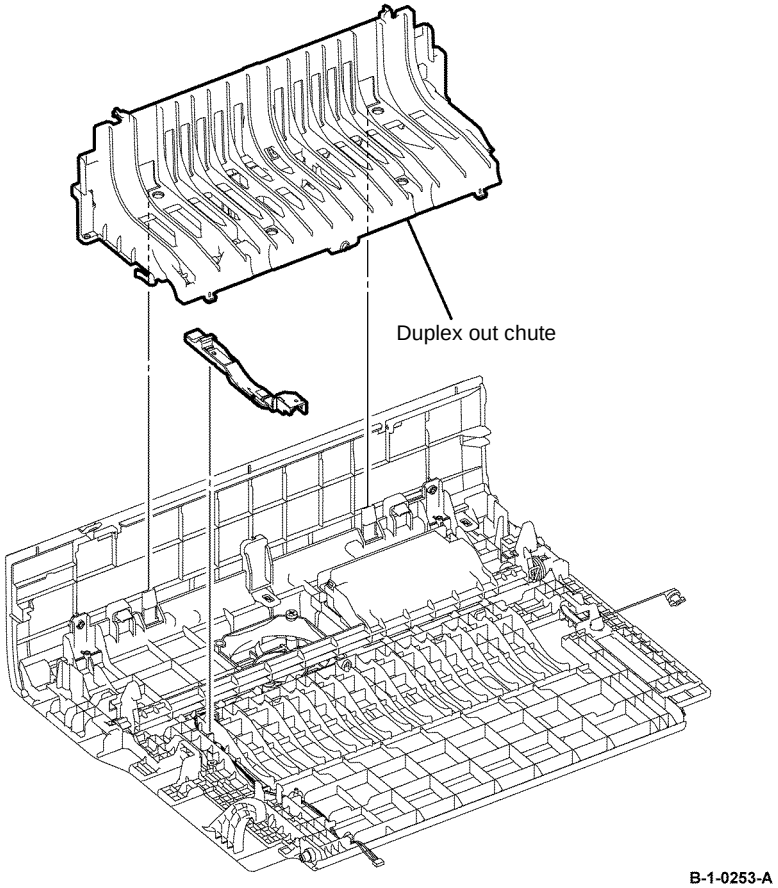

Figure 1 Duplex out chute removal

6. Release the rear latch in the arrowed direction to release the two hooks, then remove the rear latch, Figure 2.

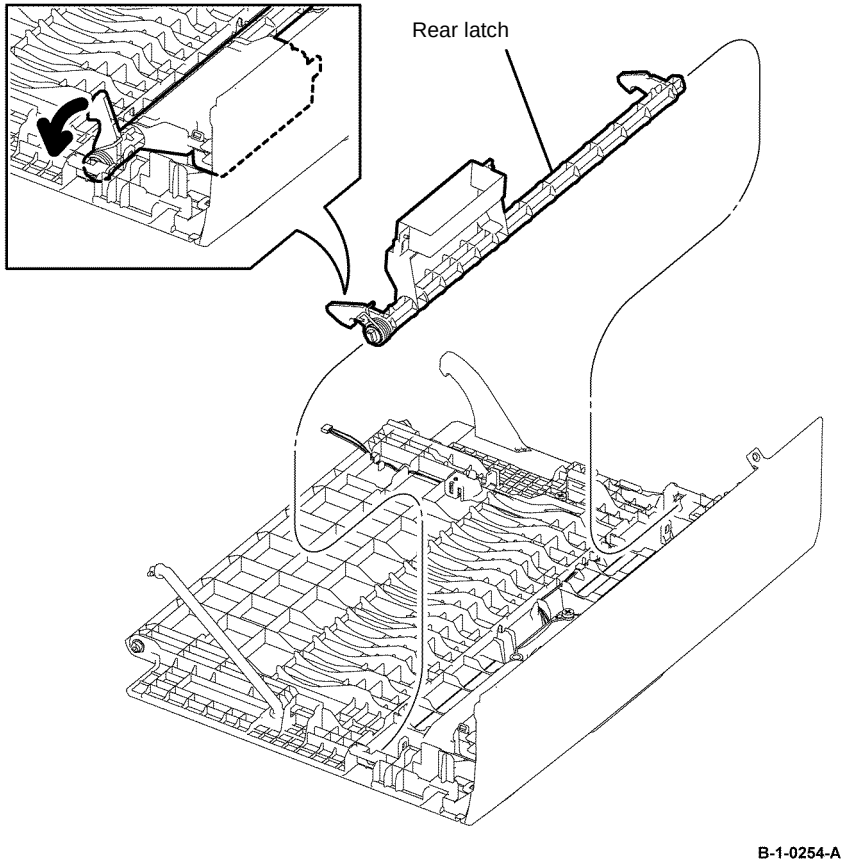

Figure 2 Rear latch removal

7. Remove two screws (silver, tapping, 22mm) that fix the rear fan. Release the harness from the harness guide, then remove the rear fan, Figure 3.

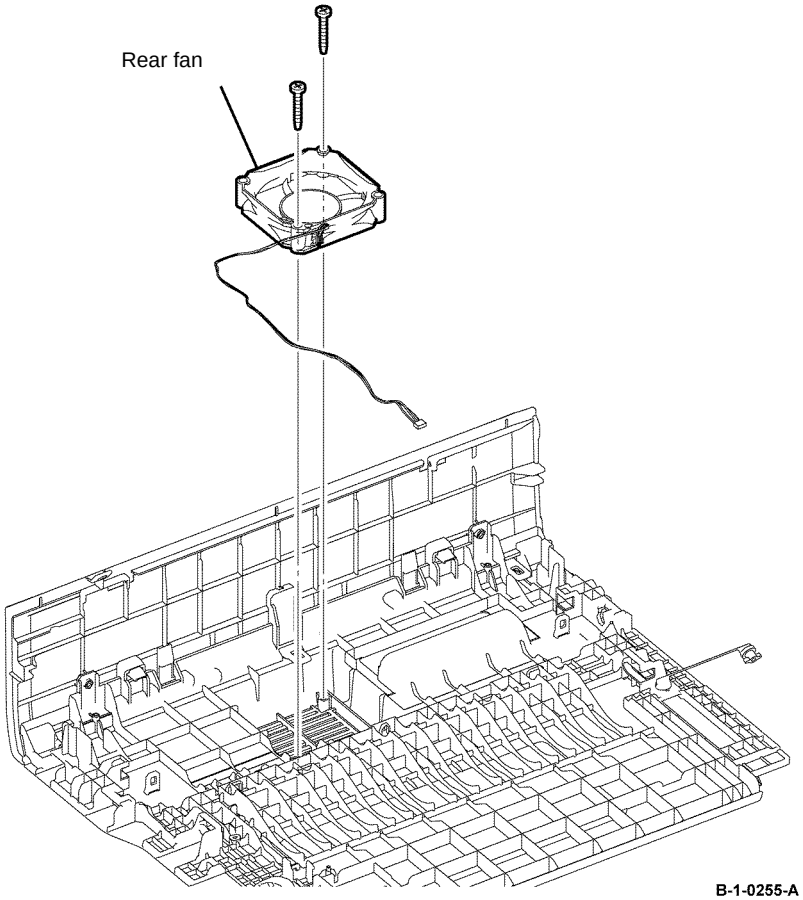

Figure 3 Rear fan removal

Replacement

The replacement is the reverse of the removal procedure.

REP 19.16 Rear Fan B400

Parts List on PL 19.3A

Removal

WARNING

Switch off the electricity to the machine, GP 10. Disconnect the power cord from the customer supply while performing tasks that do not need electricity. Electricity can cause death or injury. Moving parts can cause injury.

1. Remove the rear-cover assembly, REP 19.14.
2. Remove the transfer roll assembly, REP 6.2.
3. Remove the duplex chute assembly, REP 14.2.
4. Release two hooks, then remove the harness guide, Figure 1.
5. Release the two hooks that fix the duplex out chute. Release the four bosses from the holes, then remove the duplex out chute, Figure 1.

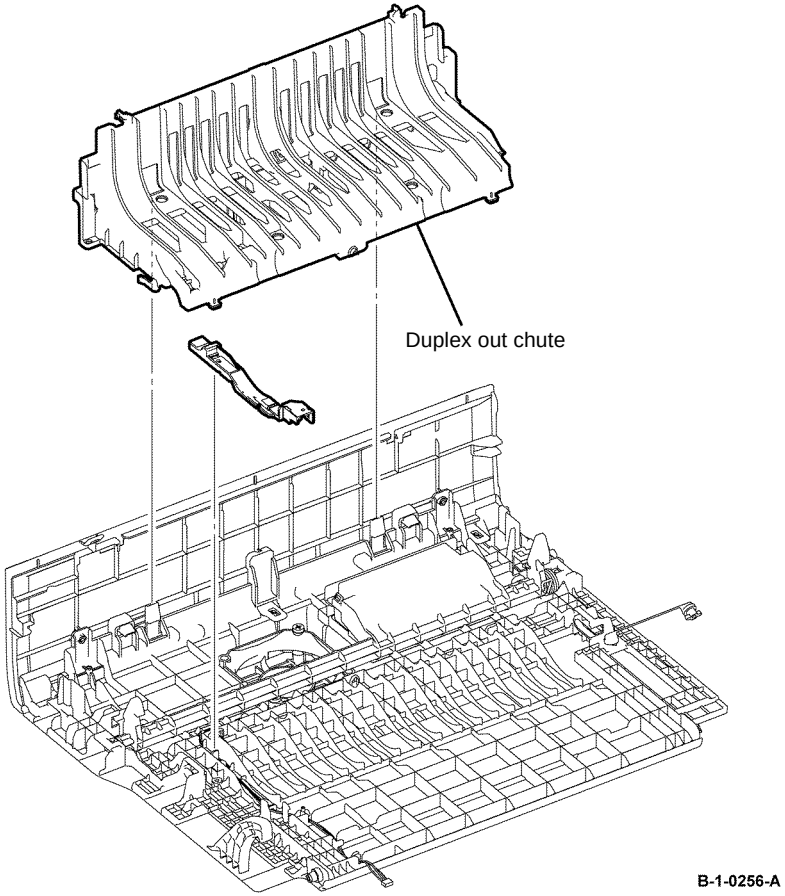

Figure 1 Duplex out chute removal

6. Release the rear latch in the arrowed direction to release the two hooks, then remove the rear latch, Figure 2.

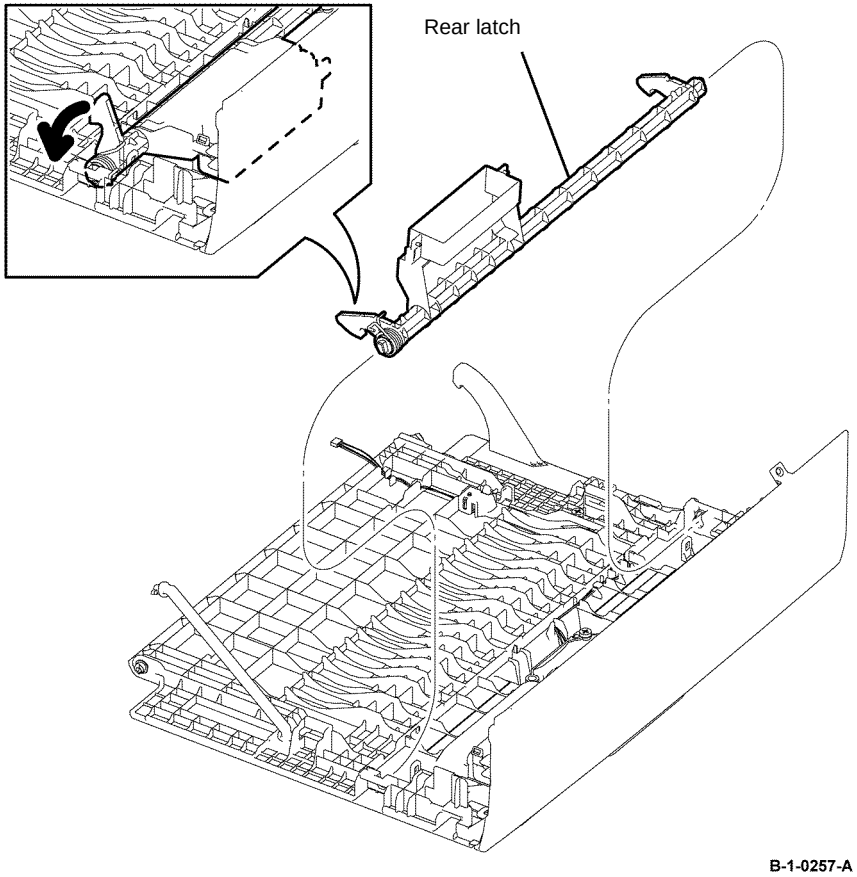

Figure 2 Rear latch removal

7. Remove two screws (silver, tapping, 22mm) that fix the rear fan. Release the harness from the harness guide, then remove the rear fan, Figure 3.

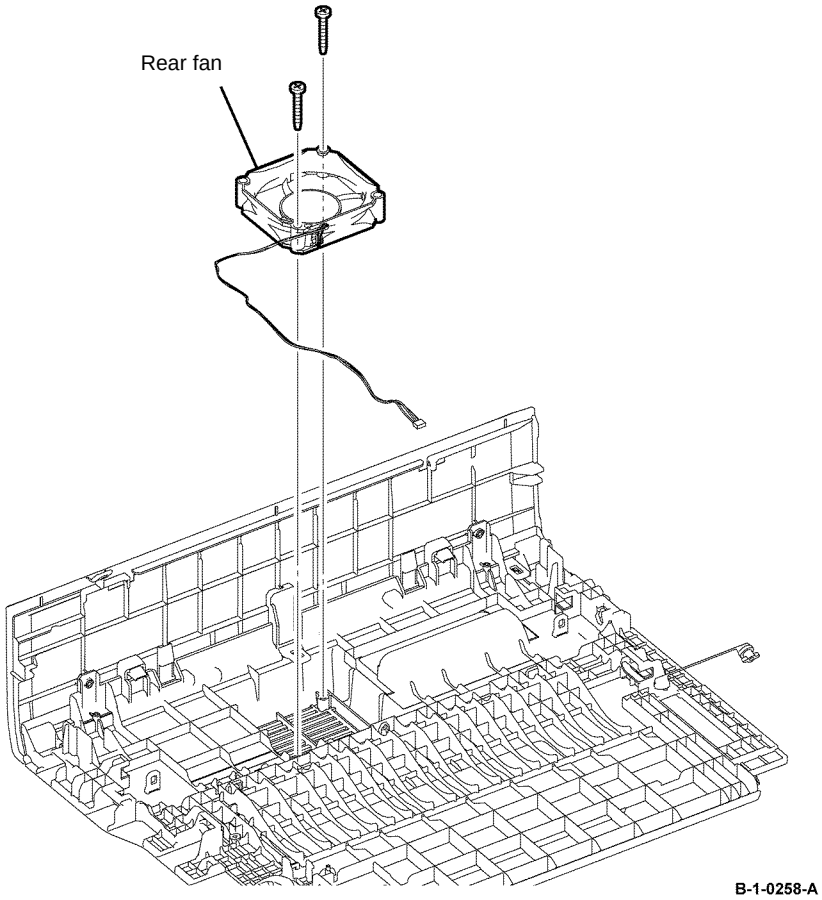

Figure 3 Rear fan removal

Replacement

The replacement is the reverse of the removal procedure.

REP 19.17 Rear Under Cover B405

Parts List on PL 19.2B

Removal

WARNING

Switch off the electricity to the machine, GP 10. Disconnect the power cord from the customer supply while performing tasks that do not need electricity. Electricity can cause death or injury. Moving parts can cause injury.

1. Open the MSI cover, PL 13.2 Item 99.
2. Pull out the MSI tray assembly, PL 13.2 Item 9.
3. Remove the front cover assembly, REP 19.1.
4. Remove the rear-cover assembly, REP 19.13.
5. Remove the ESS window cover assembly, REP 19.3.
6. Remove the WIFI cap cover, REP 19.19.
7. Remove the left cover, REP 19.11.
8. Release two holes on the rear under cover from the bosses on the printer, Figure 1.
9. Remove the rear under cover by sliding it to the left to disengage three hooks, Figure 1.

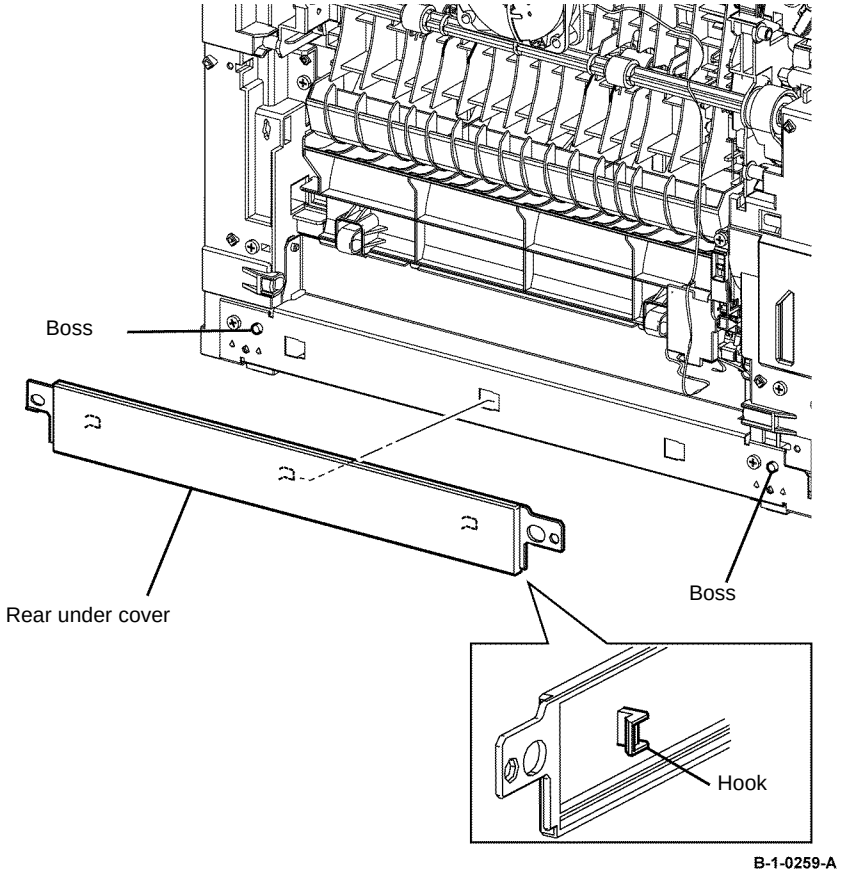

Figure 1 Rear under cover removal

Replacement

The replacement is the reverse of the removal procedure.

REP 19.18 Rear Under Cover B400

Parts List on PL 19.2A

Removal

WARNING

Switch off the electricity to the machine, GP 10. Disconnect the power cord from the customer supply while performing tasks that do not need electricity. Electricity can cause death or injury. Moving parts can cause injury.

1. Open the MSI cover, PL 13.2 Item 99.
2. Pull out the MSI tray assembly, PL 13.2 Item 9.
3. Remove the front cover assembly, REP 19.2.
4. Remove the rear-cover assembly, REP 19.14.
5. Remove the UI console assembly, REP 1.3.
6. Remove the exit top cover assembly, REP 19.10.
7. Remove the Right Cover, REP 19.8.
8. Remove the WIFI cap cover, REP 19.20.
9. Remove the ESS window cover assembly, REP 19.4.
10. Remove the front/left UI cover assembly, REP 1.4.
11. Remove the left cover, REP 19.12.
12. Release two holes on the rear under cover from the bosses on the printer, Figure 1.
13. Remove the rear under cover by sliding it to the left to disengage three hooks, Figure 1.

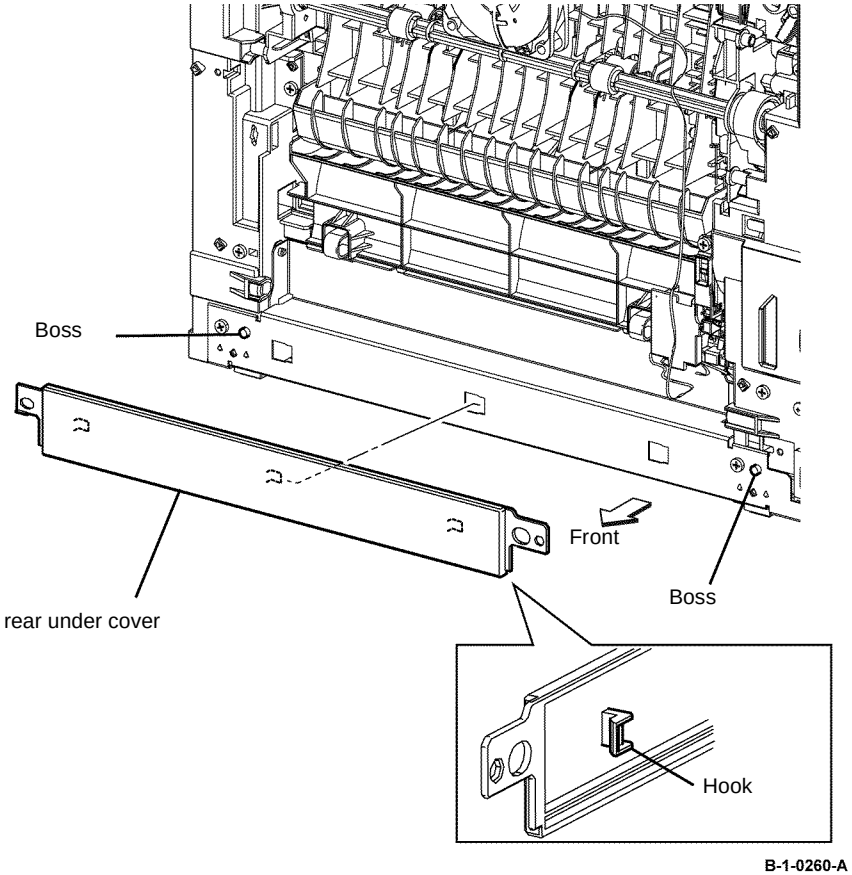

Figure 1 Rear under cover removal

Replacement

The replacement is the reverse of the removal procedure.

REP 19.19 WiFi Cap Cover B405

Parts List on PL 19.2B

Removal

WARNING

Switch off the electricity to the machine, GP 10. Disconnect the power cord from the customer supply while performing tasks that do not need electricity. Electricity can cause death or injury. Moving parts can cause injury.

1. Push the lever and remove the WiFi cap cover, Figure 1.

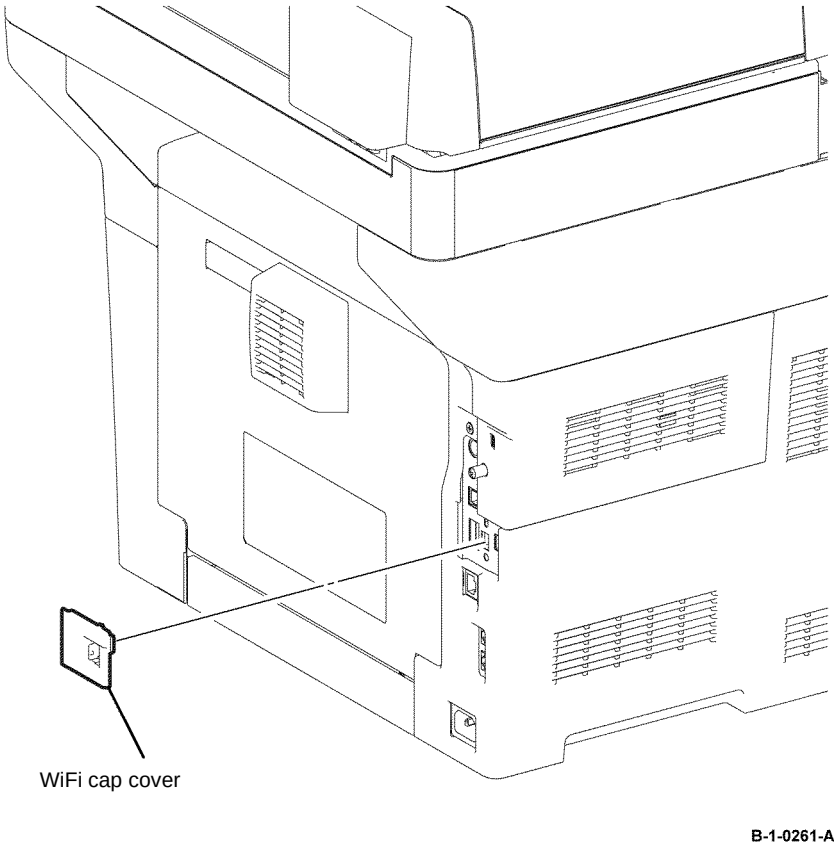

Figure 1 WiFi cap cover removal

Replacement

The replacement is the reverse of the removal procedure.

REP 19.20 WiFi Cap Cover B400

Parts List on PL 19.2A

Removal

WARNING

Switch off the electricity to the machine, GP 10. Disconnect the power cord from the customer supply while performing tasks that do not need electricity. Electricity can cause death or injury. Moving parts can cause injury.

1. Push the lever and remove the WiFi cap cover, Figure 1.

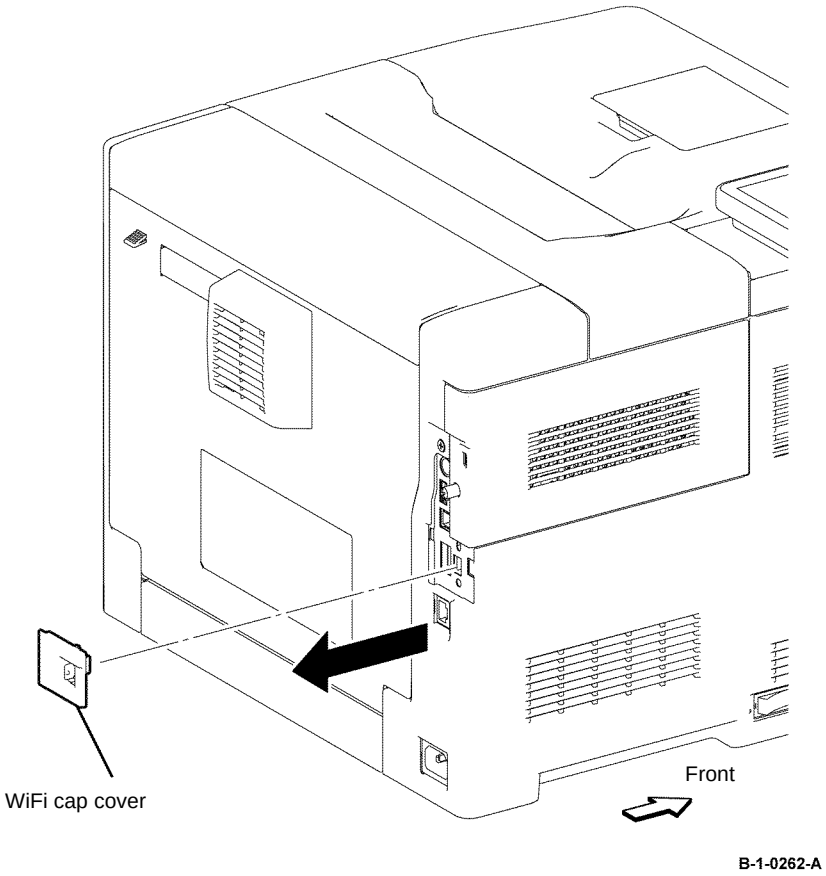

Figure 1 WiFi cap cover removal

Replacement

The replacement is the reverse of the removal procedure.

REP 21.1 IIT Assembly B405

Parts List on PL 21.1

Removal

WARNING

Switch off the electricity to the machine, GP 10. Disconnect the power cord from the customer supply while performing tasks that do not need electricity. Electricity can cause death or injury. Moving parts can cause injury.

WARNING

Take care during this procedure. Sharp edges may be present that can cause injury.

1. Open the MSI cover, PL 13.2 Item 99.
2. Pull out the MSI tray assembly, PL 13.2 Item 9.
3. Remove the rear-cover assembly, REP 19.13.
4. Remove the ESS window-cover assembly, REP 19.3.
5. Remove the WIFI cap cover, REP 19.19.
6. Remove the left cover, REP 19.11.
7. Remove the right cover, REP 19.7.
8. Remove the UI access door, UI console assembly, ICCR cover, UI top cover, IIT front top cover, and IIT left cover, REP 1.1.
9. Remove the UI harness assembly, UI speaker, and UI bottom, REP 1.2.
10. Release the hooks that holds the scanner inner-right cover, then slide it out of the printer, Figure 1.

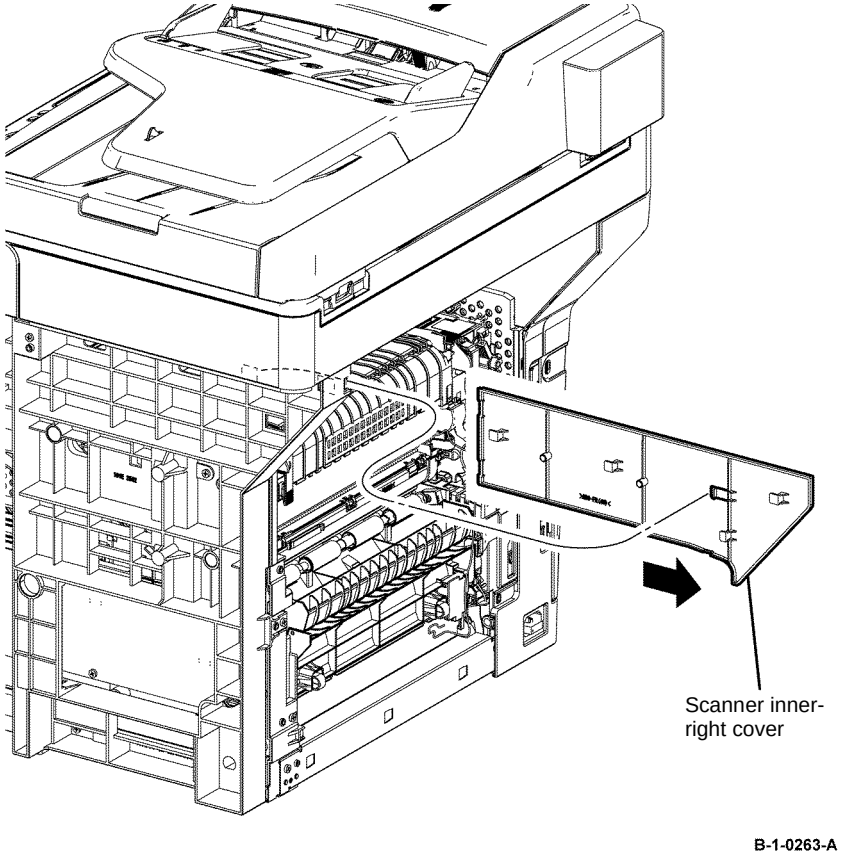

Figure 1 IIT in Right Cover Removal

11. Remove two screws (silver, M3, 6mm), then remove the ESS top plate, Figure 2.
12. Disconnect, PJ451, PJ452, PJ453, and PJ454 from the ESS PWB. Release the ribbon cable from the hole on the frame and from the harness guide, Figure 2.

    NOTE: *When removing the ribbon cable, remove the adhesive surface of the double-sided tape from the metal plate.*

13. Remove one screw (silver, M3, 6mm) that fixes the grounding wire, and then remove the grounding wire, Figure 2.

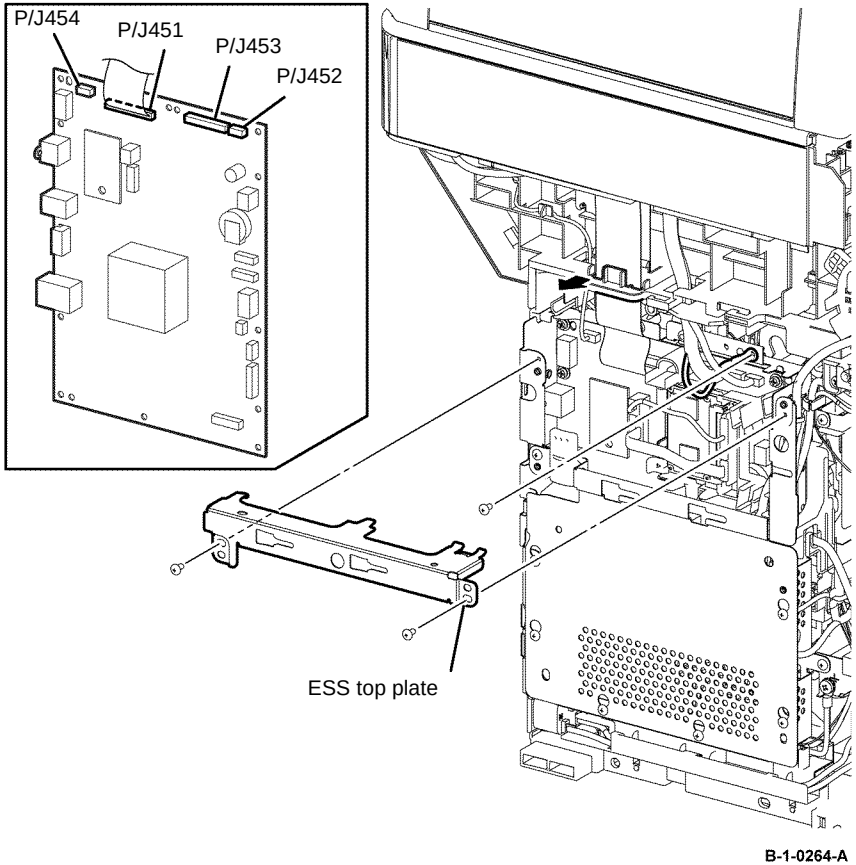

Figure 2 Scanner assembly disconnect

14. Remove the screw (silver, hexagon head with flange, M4, 8 mm), two screws (silver, tapping, 10 mm), two screws (silver, tapping, 8 mm) on the left, and the three screws (silver, tapping, 10 mm) on the right that fix the scanner assembly. Release four bosses on the scanner assembly from the holes, then remove the scanner assembly, Figure 3.

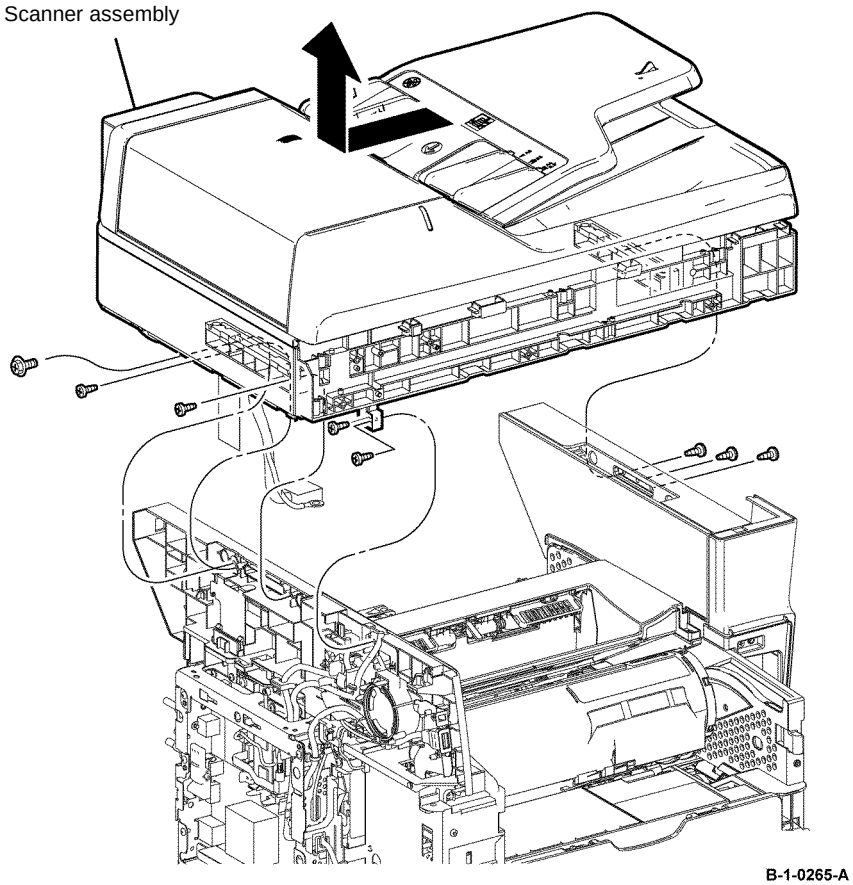

Figure 3 Scanner assembly removal

15. Remove one screw (silver, tapping, 8 mm) from the harness clamps, then pull the harness out of the hole in the scanner assembly, Figure 4.
16. Release the latch of the right hinge assembly, then separate the DADF assembly from the IIT assembly, Figure 4.

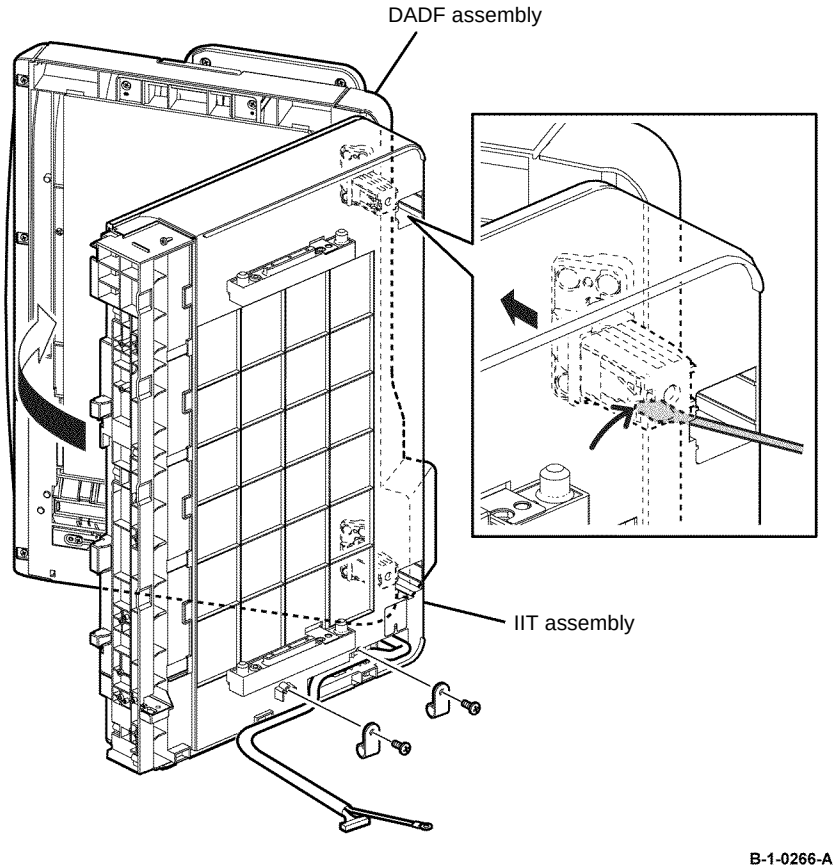

Figure 4 DADF, IIT assembly separation

Replacement

The replacement is the reverse of the removal procedure.

- Refer to dC945 for HEX-to-DEC conversion.

  NOTE: This is required for installation of the new IIT Assembly.

REP 21.2 Left/Right Hinge Assembly B405

Parts List on PL 21.1

Removal

WARNING

Switch off the electricity to the machine, GP 10. Disconnect the power cord from the customer supply while performing tasks that do not need electricity. Electricity can cause death or injury. Moving parts can cause injury.

1. Open the MSI cover, PL 13.2 Item 99.
2. Pull out the MSI tray assembly, PL 13.2 Item 9.
3. Remove the rear-cover assembly, REP 19.13.
4. Remove the ESS window-cover assembly, REP 19.3.
5. Remove the WIFI cap cover, REP 19.19.
6. Remove the left cover, REP 19.11.
7. Remove the right cover, REP 19.7.
8. Remove the UI access door, UI console assembly, ICCR cover, UI top cover, IIT front top cover, IIT left cover, REP 1.1.
9. Remove the UI harness assembly, UI speaker, UI bottom, REP 1.2.
10. Remove the scanner assembly, REP 21.1.
11. Turn the DADF assembly upside down.
12. As necessary, remove five screws (silver, tapping, 8mm), then remove the relevant hinge assembly, Figure 1.

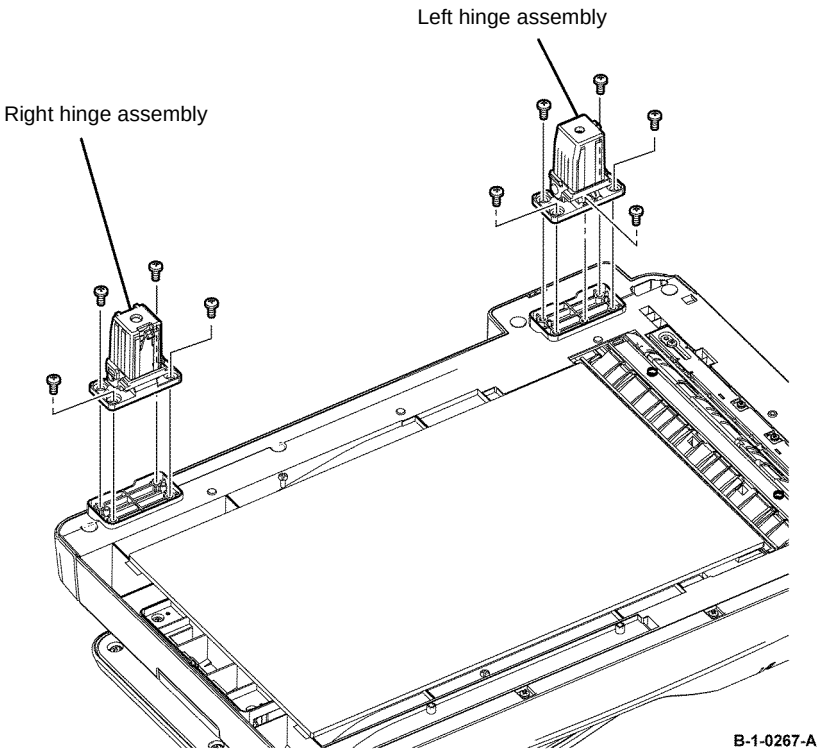

Figure 1 Hinge assembly removal

Replacement

The replacement is the reverse of the removal procedure.

REP 21.3 Separation Pad B405

Parts List on PL 21.1

Removal

WARNING

Switch off the electricity to the machine, GP 10. Disconnect the power cord from the customer supply while performing tasks that do not need electricity. Electricity can cause death or injury. Moving parts can cause injury.

1. Open the DADF top cover, PL 21.1 Item 2.
2. Release two hooks, then remove the separation pad, Figure 1.

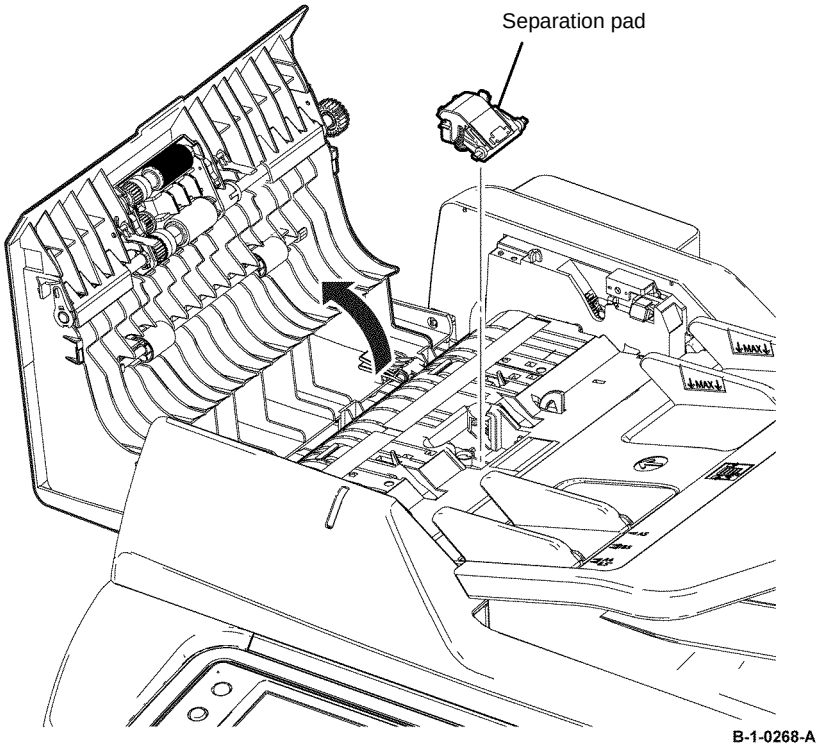

Figure 1 Separation pad removal

Replacement

The replacement is the reverse of the removal procedure.

REP 21.4 DADF Roller Assembly B405

Parts List on PL 21.1

Removal

WARNING

Switch off the electricity to the machine, GP 10. Disconnect the power cord from the customer supply while performing tasks that do not need electricity. Electricity can cause death or injury. Moving parts can cause injury.

1. Open the DADF top cover, PL 21.1 Item 2.
2. Release two lock levers, then remove the DADF roller assembly, Figure 1.

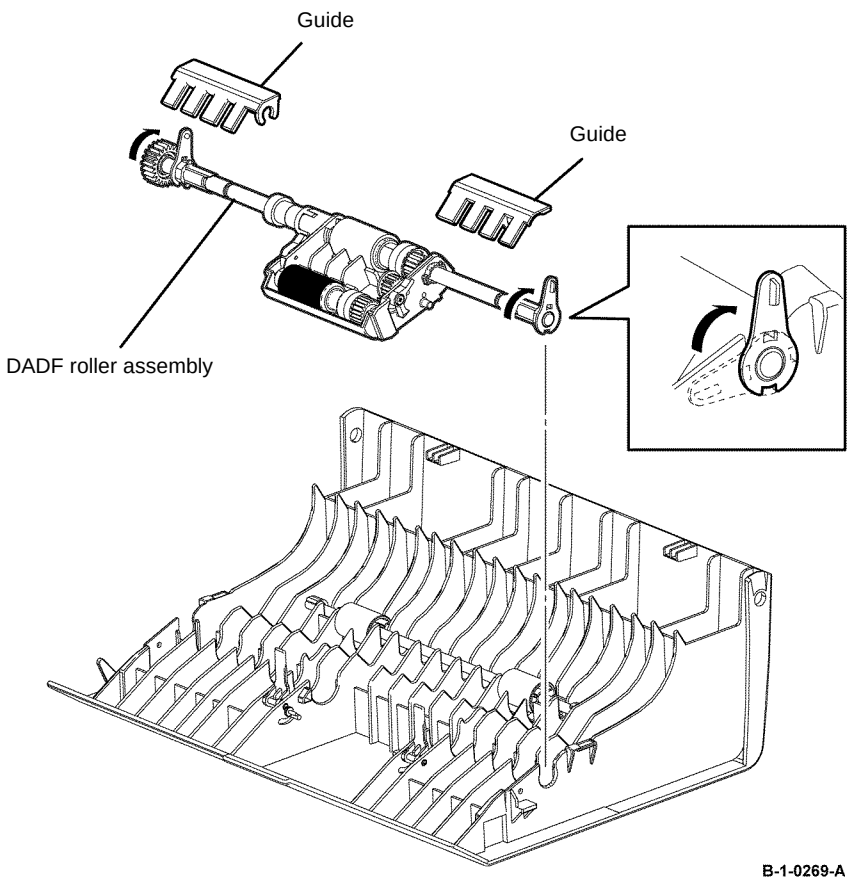

Figure 1 DADF feed roller assembly removal

Replacement

1. The replacement is the reverse of the removal procedure.
2. Set the boss of the DADF roller assembly into the hole of the DADF top cover, Figure 2.
3. Position the two guides on the DADF roller assembly, Figure 2.

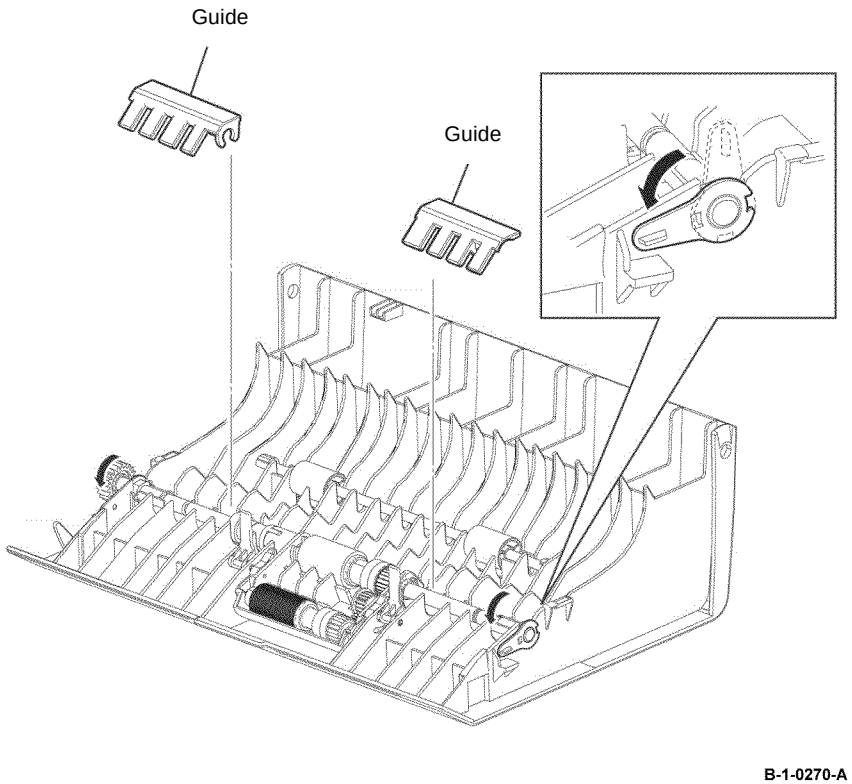

Figure 2 DADF feed roller assembly installation

REP 21.5 DADF Top Cover B405

Parts List on PL 21.1

Removal

WARNING

Switch off the electricity to the machine, GP 10. Disconnect the power cord from the customer supply while performing tasks that do not need electricity. Electricity can cause death or injury. Moving parts can cause injury.

1. Open the DADF top cover, PL 21.1 Item 2.
2. Release the cover from the front stud, then remove the DADF top cover, Figure 1.

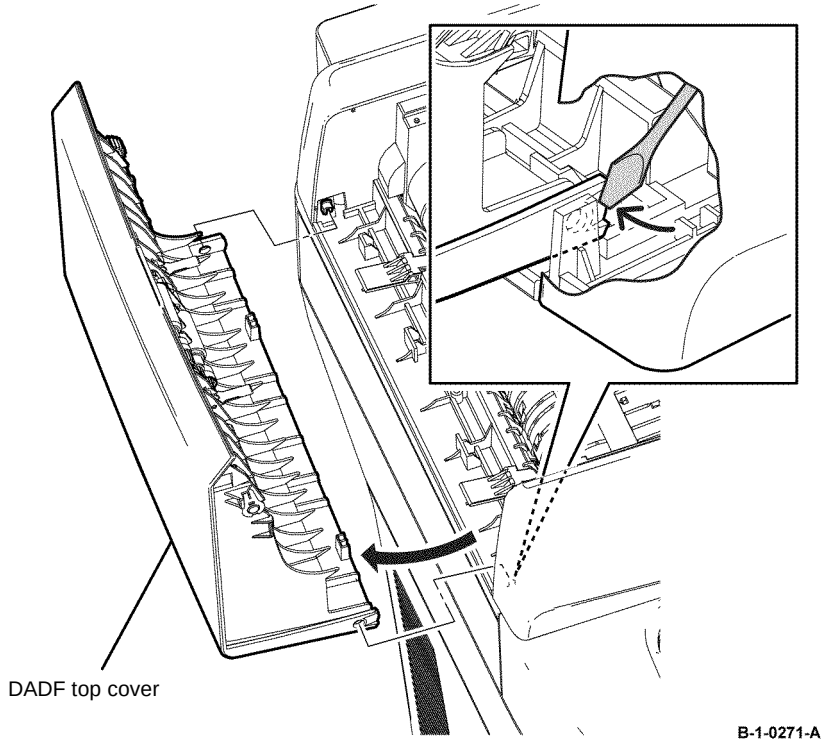

Figure 1 DADF top cover removal

Replacement

1. The replacement is the reverse of the removal procedure.
2. When installing the DADF top cover, ensure the DADF top cover is positioned under the two black tabs, Figure 2.

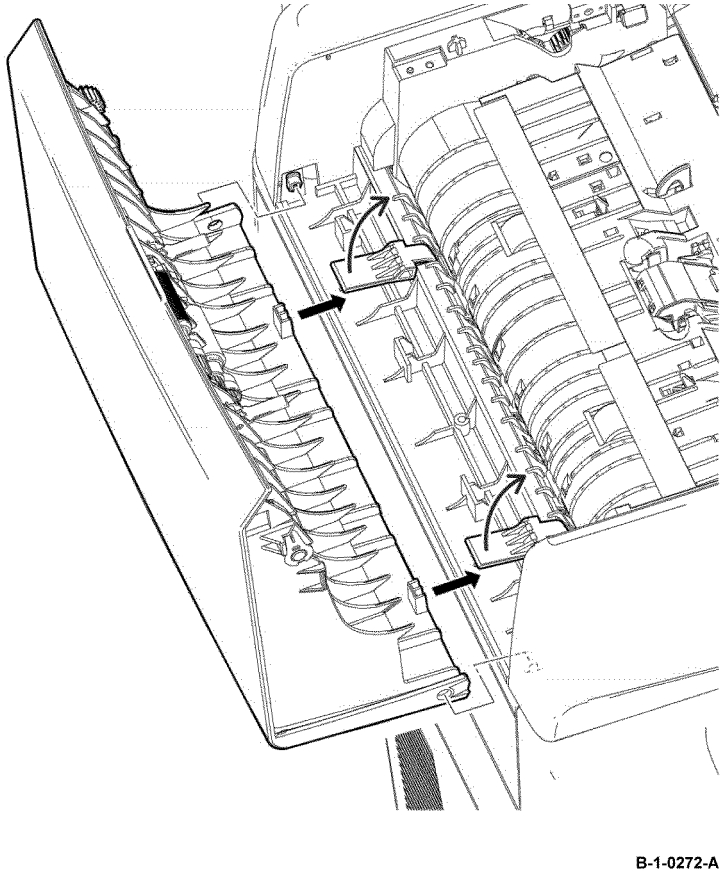

Figure 2 DADF top cover installation

REP 21.6 DADF Tray Assembly B405

Parts List on PL 21.1

Removal

WARNING

Switch off the electricity to the machine, GP 10. Disconnect the power cord from the customer supply while performing tasks that do not need electricity. Electricity can cause death or injury. Moving parts can cause injury.

1. Remove the scanner assembly, REP 21.1.
2. Remove four screws (silver, tapping, 8mm), from the DADF assembly, Figure 1.

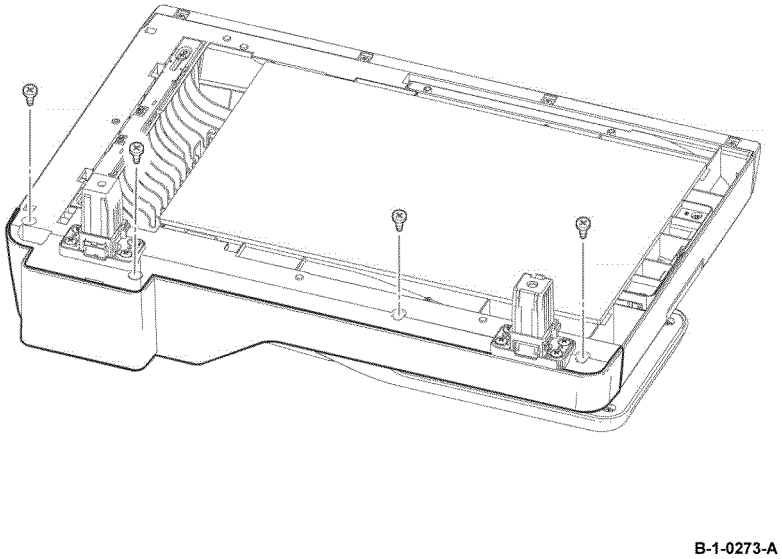

Figure 1 DADF rear-cover screw removal

3. Open the DADF top cover and DADF tray assembly, then remove the DADF rear-cover, Figure 2.

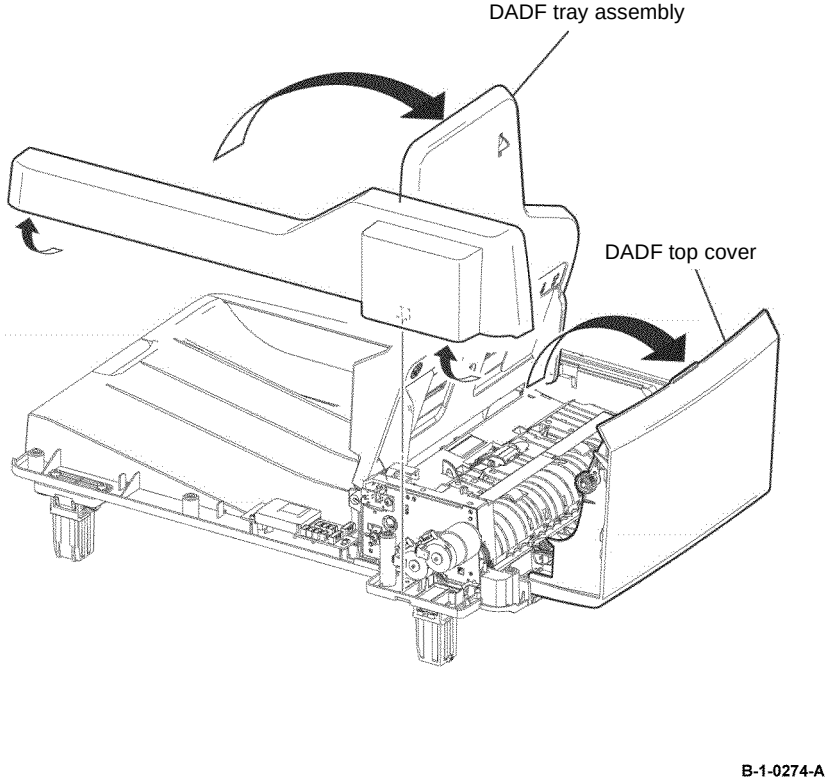

Figure 2 DADF rear-cover removal

4. Disconnect CON 12, then remove the DADF tray assembly, Figure 3.

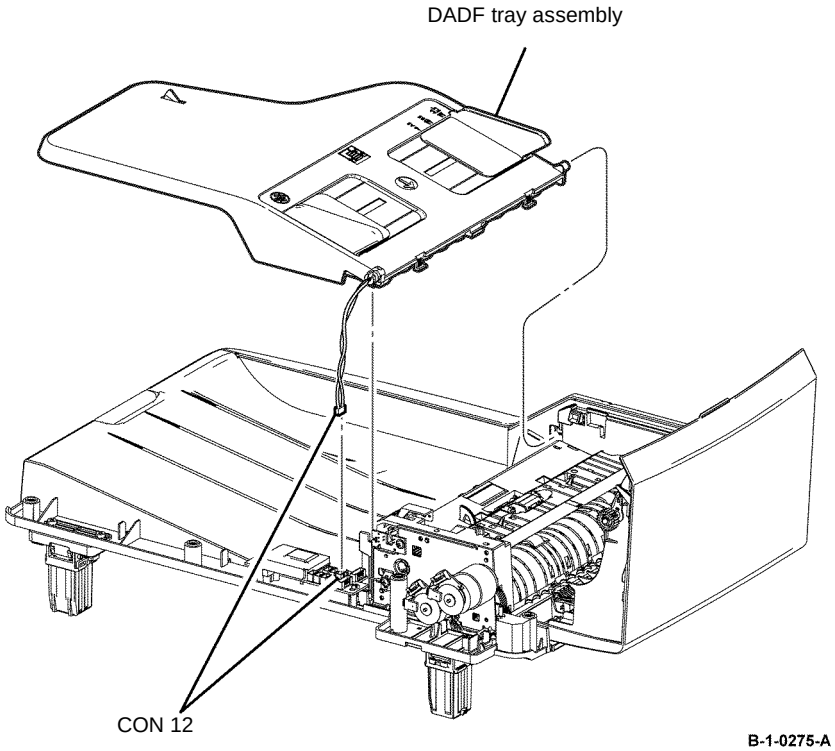

Figure 3 DADF tray assembly removal

Replacement

The replacement is the reverse of the removal procedure.

REP 21.7 Scanner Front Bottom Cover B405

Parts List on PL 1.2B

Removal

WARNING

Switch off the electricity to the machine, GP 10. Disconnect the power cord from the customer supply while performing tasks that do not need electricity. Electricity can cause death or injury. Moving parts can cause injury.

1. Remove the scanner assembly, REP 21.1.
2. Remove one screw (silver, tapping, 8mm), then remove the scanner front bottom cover, Figure 1.

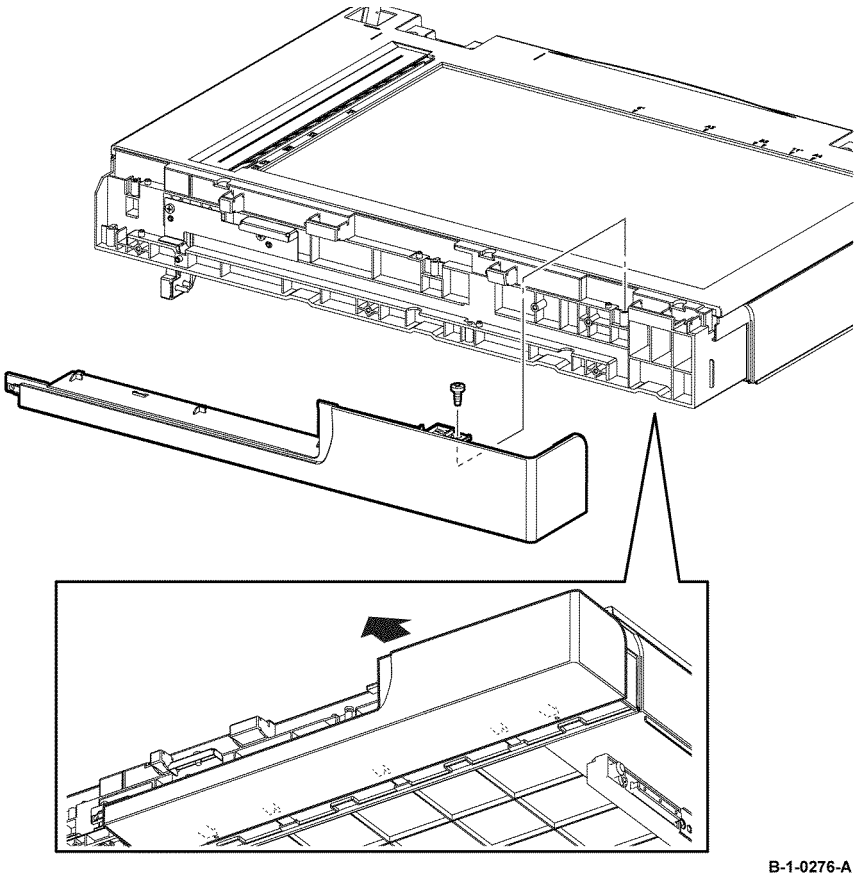

Figure 1 Scanner front bottom cover removal

Replacement

The replacement is the reverse of the removal procedure.

ADJ 1.1 Transfer Adjustment

Purpose

To adjust the transfer amount. This may decrease the severity of white spots or a mottled appearance on prints. This adjustment can be performed for each supported paper type.

NOTE: *This procedure adjusts print quality by creating lighter or darker prints.*

NOTE: *For information on resolving Image Quality problems, refer to IQ1.*

Adjustment

To adjust the transfer amount by editing NVM values:

1. Identify the paper type for which you need to adjust the transfer amount.
2. Refer to dC131, NVM Read /Write for detailed instructions on accessing NVM values.
3. Enter the Chain-Link code for the paper identified in step 1. Refer to Table 1 for the appropriate Chain-Link code.
4. Adjust the value up or down as necessary within the range 1 to 16, with 6 as the default value.

Table 1 Adjustments

Media Name	Chain-Link	Default
Plain 1	746-500	6
Plain 2	746-501	6
High-Quality	746-502	6
Heavyweight 1	746-503	6
Heavyweight 2	746-504	6
Heavyweight 3	746-505	6
Postcard	746-506	6
Envelope	746-507	6
Label	746-508	6
Thin	746-510	6

ADJ 1.2 Fuser Adjustment

Purpose

The Fuser uses heat and pressure to bond the toner image to the paper. For optimal print quality, the printer automatically adjusts the temperature of the Fuser when you change the paper type. Because of differences in paper construction and thickness, the adjustment made by the printer is not enough or is too much for all paper types. If the Fuser temperature is too low, the toner will not properly bond to the paper. If the Fuser is too hot, the paper can curl.

Adjustment

Fuser temperature adjustment for a particular paper type is accomplished by editing the NVM values.

To adjust the Fuser temperature by editing NVM values:

1. Identify the paper type for which you need to adjust the fuser temperature.
2. Refer to dC131, NVM Read /Write for detailed instructions on accessing NVM values.
3. Enter the Chain-Link code for the paper identified in step 1. Refer to Table 1 for the appropriate Chain-Link code.
4. Adjust the value up or down as necessary using one of the following settings:

   -9, -6, -3, 0 (default), +3, +6, +9.

   The value of the setting raises (if positive) or lowers (if negative) the Fuser temperature for the specified paper type. For example, entering +3 will raise the temperature by three degrees celsius.

Table 1 Adjustments

Media Name	Chain-Link	Default
Plain 1	744-050	0
Plain 2	744-051	0
High-Quality	744-052	0
Heavyweight 1	744-053	0
Heavyweight 2	744-054	0
Heavyweight 3	744-055	0
Postcard	744-056	0
Envelope	744-057	0
Label	744-058	0
Thin	744-060	0

ADJ 1.3 Altitude Adjustment

Purpose

Print quality varies with barometric pressure. Since the barometric pressure decreases as the altitude increases, altitude can affect the print quality. To optimize print quality for your location, select an altitude setting to match the location by entering Service Mode and editing NVM using a specific Chain-Link code.

Adjustment

1. Refer to dC131.
2. Enter the Chain-Link code 746-526.
3. Refer to Table 1 to set the NVM value corresponding to your altitude in meters. The default setting is 0. Use only the NVM values listed in Table 1.

Table 1 Adjustments

Altitude	NVM Value
0 m	0 (default)
500 m	1
1000 m	2
1500 m	3
2000 m	4
2500 m	5
3000 m	6

5 Parts Lists

PL 1 - User Interface
PL 1.1A UI (1 of 2) - B400 5-3
PL 1.1B UI (1 of 2) - B405 5-4
PL 1.2A UI (2 of 2) - B400 5-5
PL 1.2B UI (2 of 2) - B405 5-6

PL 2 - Raster Output Scanner (ROS)
PL 2.1 ROS 5-7

PL 3 - Drive
PL 3.1 Drive 5-8

PL 4 - Noise, Ozone, Heat and Dust (NOHAD)
PL 4.1A NOHAD - B400 5-9
PL 4.1B NOHAD - B405 5-10

PL 5 - Dispenser
PL 5.1 Dispenser 5-11

PL 6 - Transfer
PL 6.1 Transfer 5-12

PL 7 - Fusing
PL 7.1 Fuser 5-13

PL 8 - Xerographics
PL 8.1 Xerographics 5-14

PL 9 - Tray-550
PL 9.2 Tray 1 5-15

PL 11 - Option Feeder
PL 11.1A Option Feeder (1 of 4) - B400 5-16
PL 11.1B Option Feeder (1 of 4) - B405 5-17
PL 11.2 Option Feeder (2 of 4) 5-18
PL 11.3 Option Feeder (3 of 4) 5-19
PL 11.4 Option Feeder (4 of 4) 5-20

PL 13 - MSI
PL 13.1 MSI (1 of 2) 5-21
PL 13.2 MSI (2 of 2) 5-22

PL 14 - Duplex
PL 14.1 Duplex 5-23

PL 15 - Registration
PL 15.1A Registration (1 of 3) - B400 5-24
PL 15.1B Registration (1 of 3) - B405 5-25
PL 15.2 Registration (2 of 3) 5-26
PL 15.3 Registration (3 of 3) 5-27

PL 17 - Exit
PL 17.1 Exit 5-28

PL 18 - Electrical
PL 18.1A Electrical (1 of 3) - B400 5-29
PL 18.1B Electrical (1 of 3) - B405 5-30
PL 18.2 Electrical (2 of 3) 5-31
PL 18.3A Electrical (3 of 3) - B400 5-32
PL 18.3B Electrical (3 of 3) - B405 5-33

PL 19 - Cover
PL 19.1A Cover (1 of 3) - B400 5-34
PL 19.1B Cover (1 of 3) - B405 5-35
PL 19.2A Cover (2 of 3) - B400 5-36
PL 19.2B Cover (2 of 3) - B405 5-37
PL 19.3A Cover (3 of 3) - B400 5-38
PL 19.3B Cover (3 of 3) - B405 5-39

PL 21 - Scanner
PL 21.1 Scanner 5-40

PL 1.1A UI (1 of 2) - B400

Item	Part	Description
1	952K38390	UI harness assembly B400 (REP 1.6)
2	–	UI speaker B400 (Not Spared) (REP 1.5)
3	822E32001	UI access door
4	948K20152	UI console assembly B400 (REP 1.3)

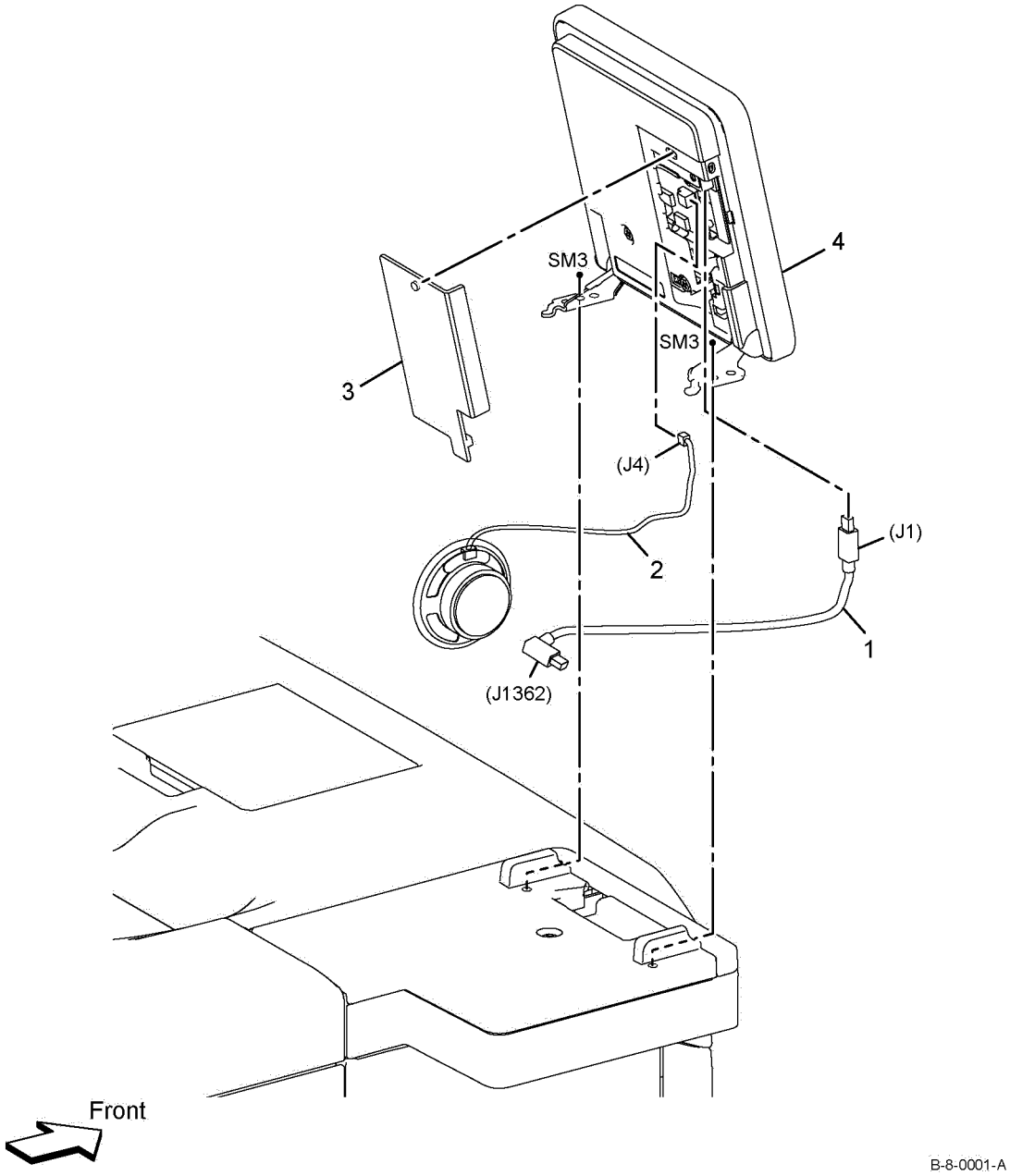

PL 1.1B UI (1 of 2) - B405

Item	Part	Description
1	952K38760	UI harness assembly B405 (REP 1.2)
2	–	UI speaker (Not Spared) (REP 1.2)
3	822E32001	UI access door (REP 1.1)
4	948K20152	UI console assembly (REP 1.1)

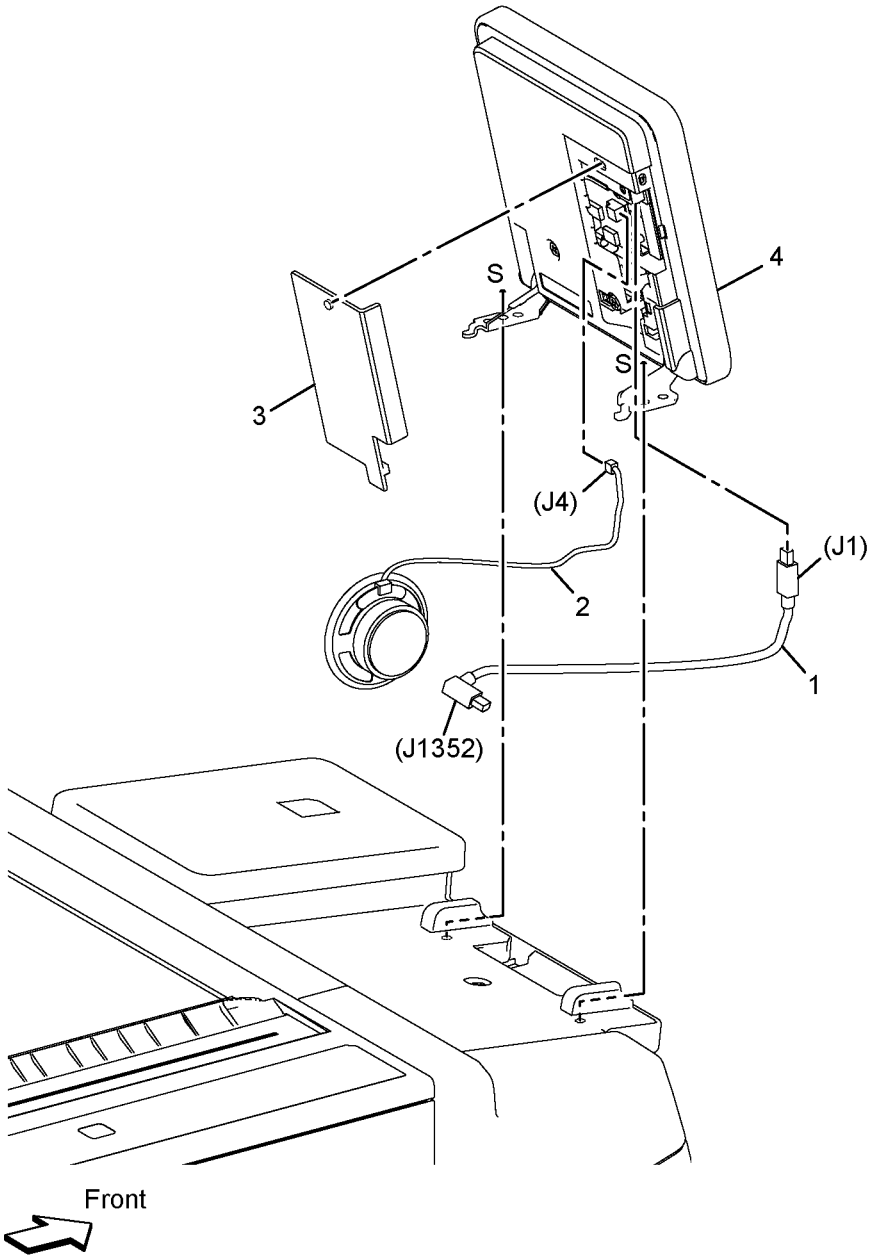

PL 1.2A UI (2 of 2) - B400

Item	Part	Description
1	–	UI top cover (Not Spared)
2	822E29410	UI left cover (REP 1.4)
3	–	UI front cover (Not Spared) (REP 1.4)

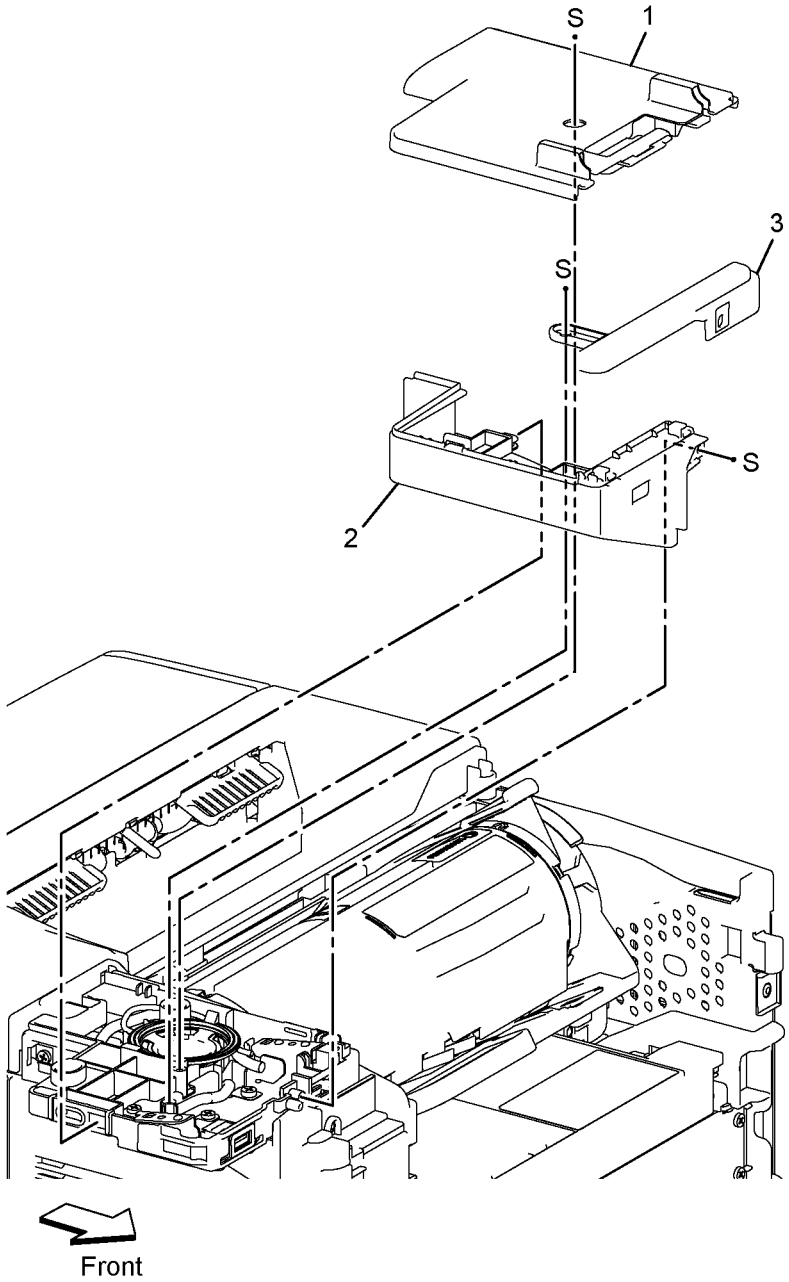

B-8-0002-A

PL 1.2B UI (2 of 2) - B405

Item	Part	Description
1	822E31951	ICCR cover (REP 1.1)
2	–	ICCR inner cover (Not Spared)
3	822E31941	UI top cover (REP 1.1)
4	–	Bottom plate (P/O PL 1.2B Item 99)
5	–	UI base bottom cover (P/O PL 1.2B Item 99)
6	–	ICCR USB harness (Not Spared)
7	–	Not used
8	–	Not used
9	–	Not used
10	822E31980	Scanner front top cover (REP 1.1)
11	822E31992	Scanner front bottom cover (REP 21.7)
12	822E31971	Scanner left cover (REP 1.1)
99	607K03900	UI bottom frame kit (REP 1.2)

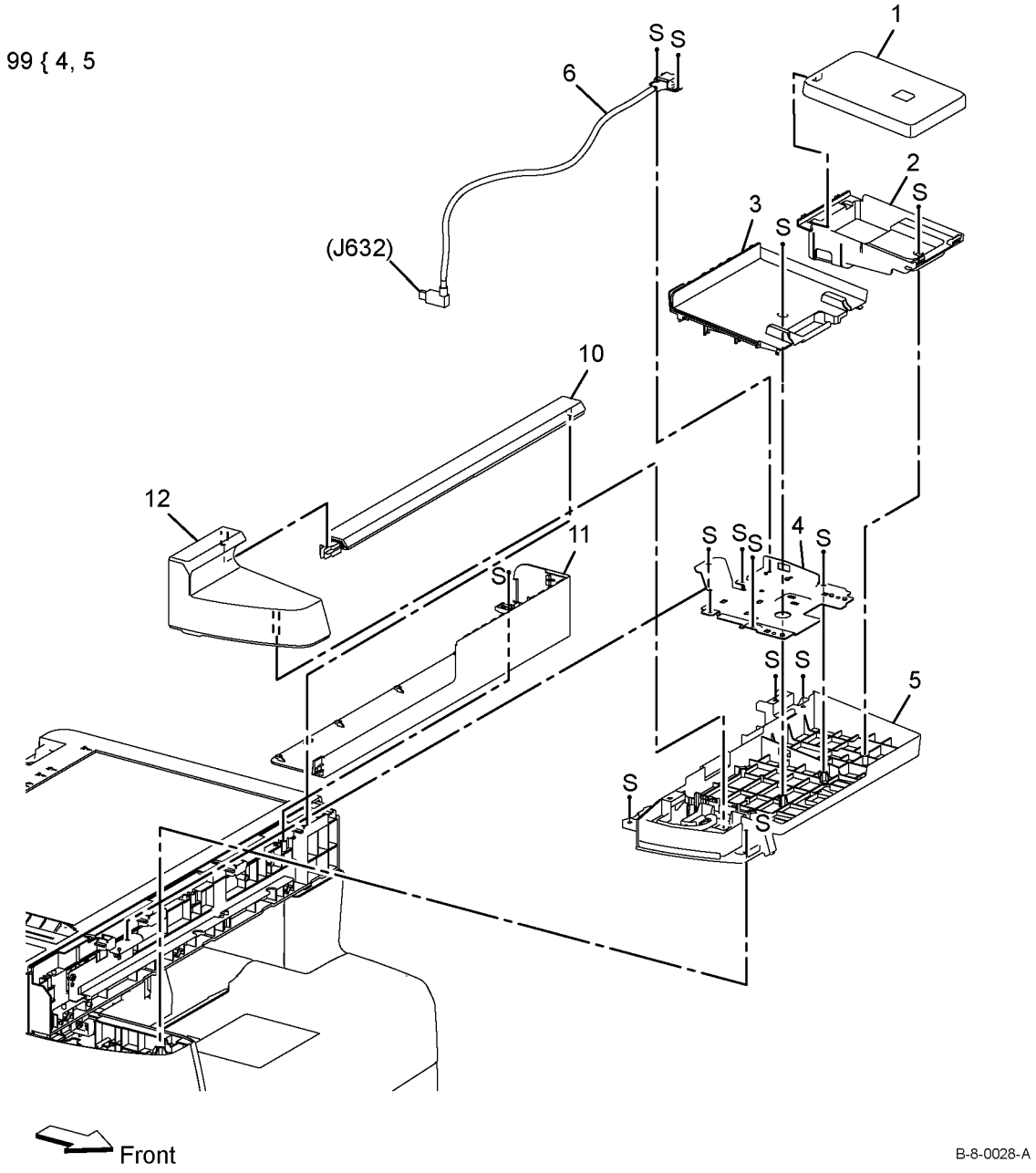

PL 2.1 ROS

Item	Part	Description
1	062K28821	ROS assembly B400 (REP 2.2) / B405 (REP 2.1) (220V)
–	062K24269	ROS assembly B400 (REP 2.2) / B405 (REP 2.1) (110V)
2	–	ROS-MCU harness (P/O PL 2.1 Item 1)
3	–	Video harness (P/O PL 2.1 Item 1)
4	–	ROS unit (P/O PL 2.1 Item 1)

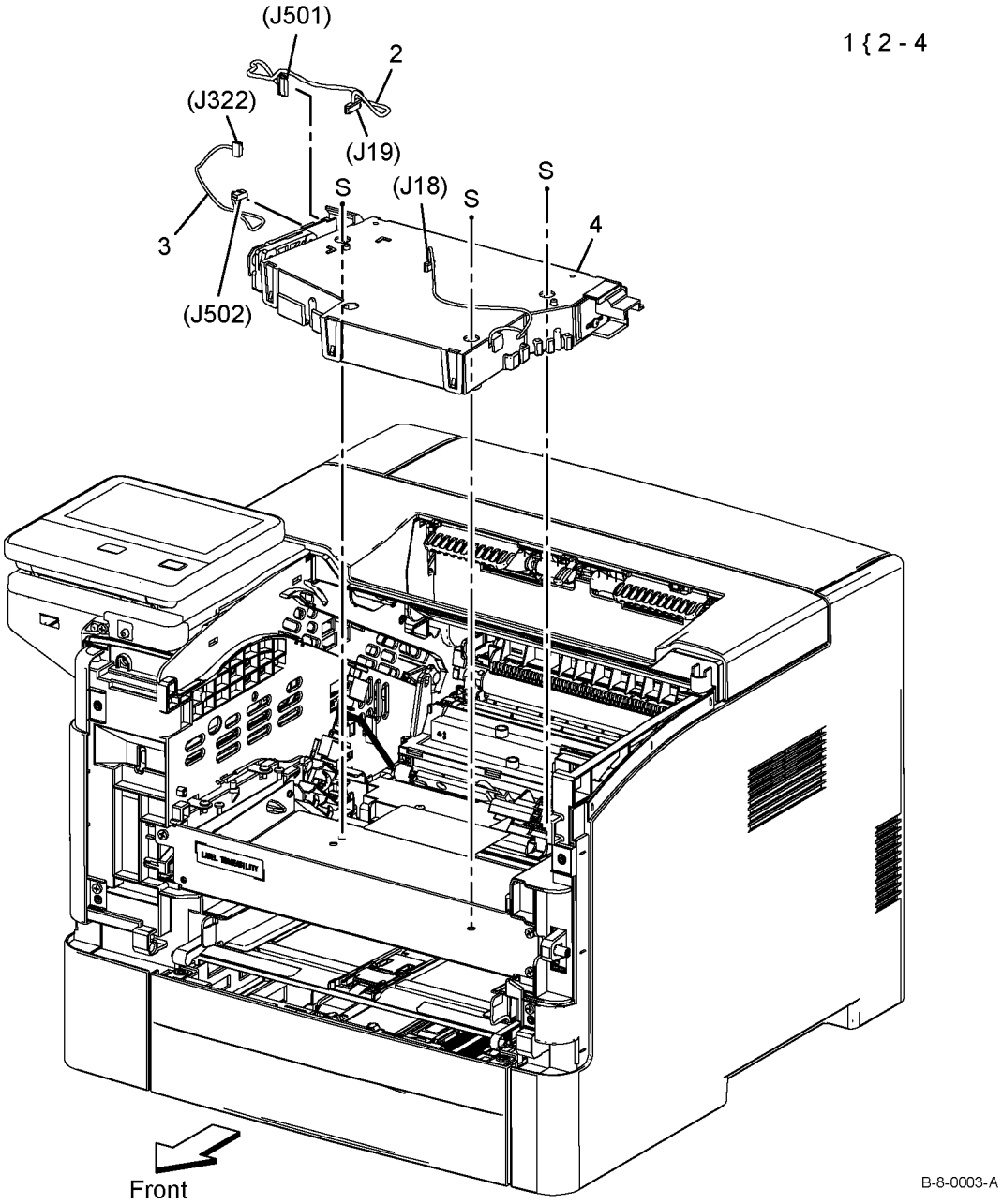

PL 3.1 Drive

Item	Part	Description
1	007K18903	Main drive assembly B400 (REP 3.2) / B405 (REP 3.1)
2	007K18912	Exit out drive holder assembly B400 (REP 3.4) / B405 (REP 3.3)
3	007K18931	Exit in drive S3 holder assembly B400 (REP 3.6) / B405 (REP 3.5)
4	019E83450	Duplex gear holder
5	604K80770	Duplex in gear B400 (REP 3.8) / B405 (REP 3.7)
6	–	T21 exit clutch assembly B400 (REP 3.6) / B405 (REP 3.5) (P/O PL 3.1 Item 3)
7	–	T24 inverter clutch assembly B400 (REP 3.4) / B405 (REP 3.3) (P/O PL 3.1 Item 2)
8	–	E3 Z gear (P/O PL 3.1 Item 2)
9	–	E3 gear (P/O PL 3.1 Item 2)
10	–	Exit out drive holder (P/O PL 3.1 Item 2)
11	–	Exit in drive S3 holder (P/O PL 3.1 Item 3)

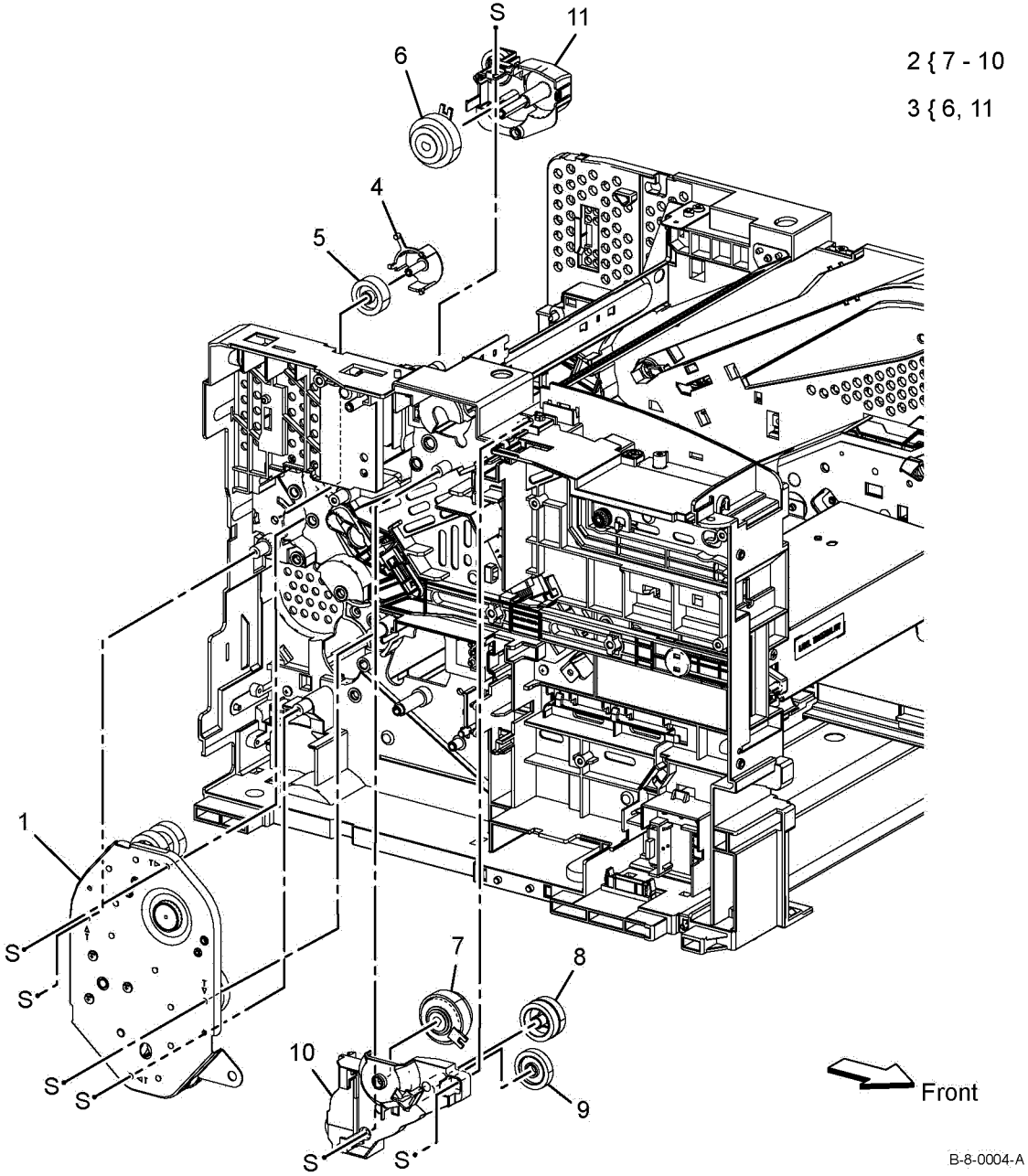

PL 4.1A NOHAD - B400

Item	Part	Description
1	127K66001	LVPS fan (Main fan assembly)
2	–	Cable band (P/O PL 4.1A Item 1)
3	012E18133	Front right link (REP 4.2)
4	012E18143	Front left link (REP 4.4)
5	–	Right link shaft (Not Spared) (REP 4.2)
6	–	Left link shaft (Not Spared) (REP 4.4)
7	012E18172	Connector link (REP 4.2)
8	–	CRU interlock link
9	–	Right xerographic stopper assembly (Not Spared)
10	–	Left xerographic stopper assembly (Not Spared)
11	–	CRU interlock spring (Not Spared)
12	–	Foot (P/O PL 4.1A Item 97)
13	–	LVPS fan (P/O PL 4.1A Item 1)
97	604K77650	Foot assembly

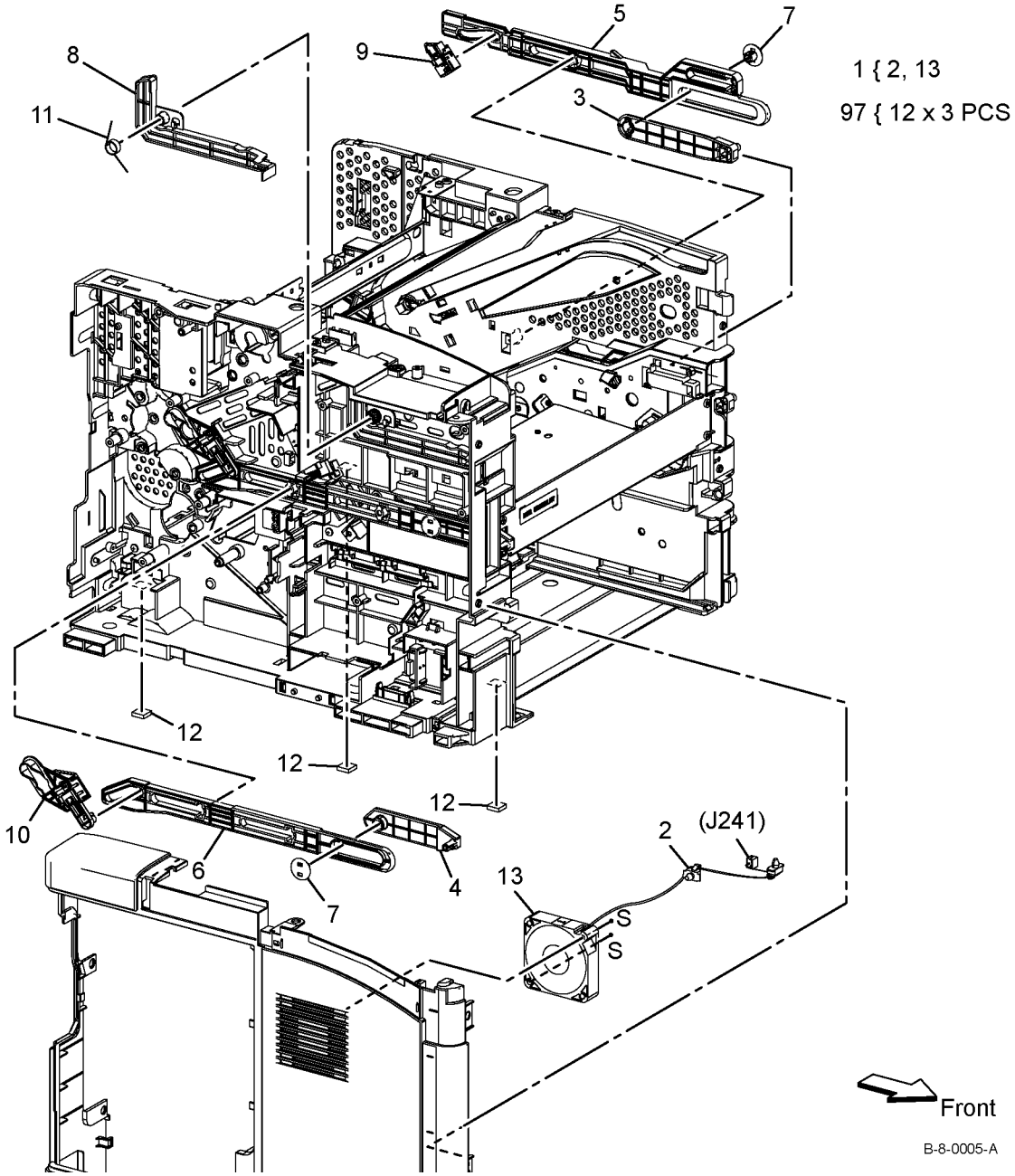

PL 4.1B NOHAD - B405

Item	Part	Description
1	127K75190	LVPS fan (main fan assembly)
2	–	Band cable (P/O PL 4.1B Item 1)
3	012E18133	Front right link (REP 4.1)
4	012E18143	Front left link (REP 4.3)
5	–	Right link shaft (Not Spared) (REP 4.1)
6	–	Left link shaft (Not Spared) (REP 4.3)
7	012E18172	Connector link (REP 4.1)
8	–	CRU interlock link (Not Spared)
9	–	Right xero stopper assembly (Not Spared)
10	–	Left xero stopper assembly (Not Spared)
11	–	CRU interlock spring (Not Spared)
12	–	Foot (P/O PL 4.1B Item 97)
13	–	LVPS fan harness assembly (Not Spared)
14	–	LVPS fan (P/O PL 4.1B Item 1)
97	604K77650	Foot assembly

1 { 2, 14

97 { 12 x 3 pcs

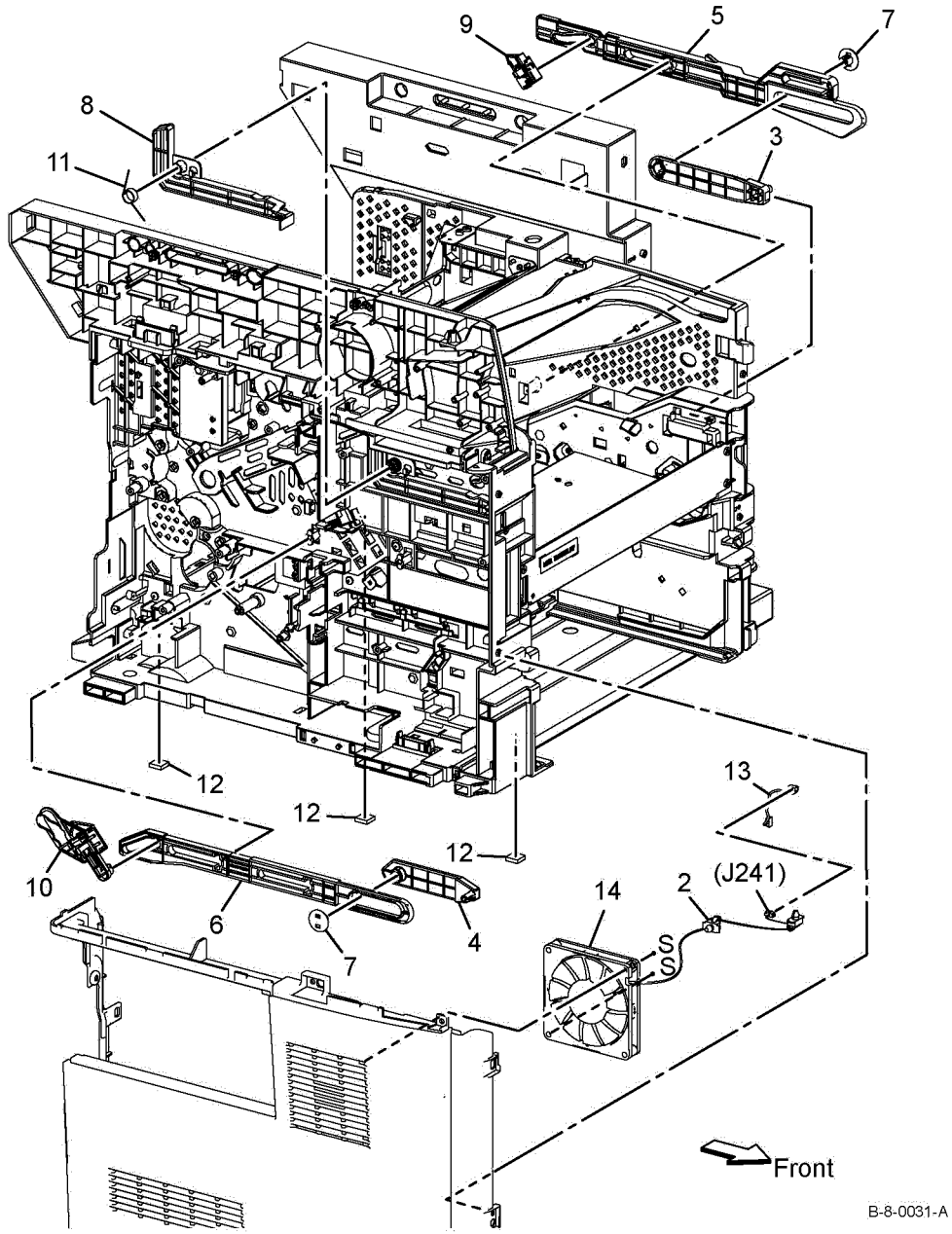

PL 5.1 Dispenser

Item	Part	Description
1	–	CRUM housing assembly B400 (REP 5.2) / B405 (REP 5.1) (P/O PL 5.1 Item 99)
2	–	Toner CRUM connector assembly (P/O PL 5.1 Item 1)
3	–	Swing CRUM housing (P/O PL 5.1 Item 1)
4	–	Swing CRUM spring (P/O PL 5.1 Item 99)
5	007K18414	Dispenser drive assembly B400 (REP 5.4) / B405 (REP 5.3)
6	–	Drive dispenser housing (P/O PL 5.1 Item 5)
7	–	Idler motor gear (P/O PL 5.1 Item 5)
8	–	Output gear (P/O PL 5.1 Item 5)
9	127K52160	Dispenser motor (B400) (REP 5.6)/ (B405) (REP 5.5)
10	116K91041	Xerographic connector assembly B400 (REP 5.8) / B405 (REP 5.7)
99	604K77290	CRUM assembly kit

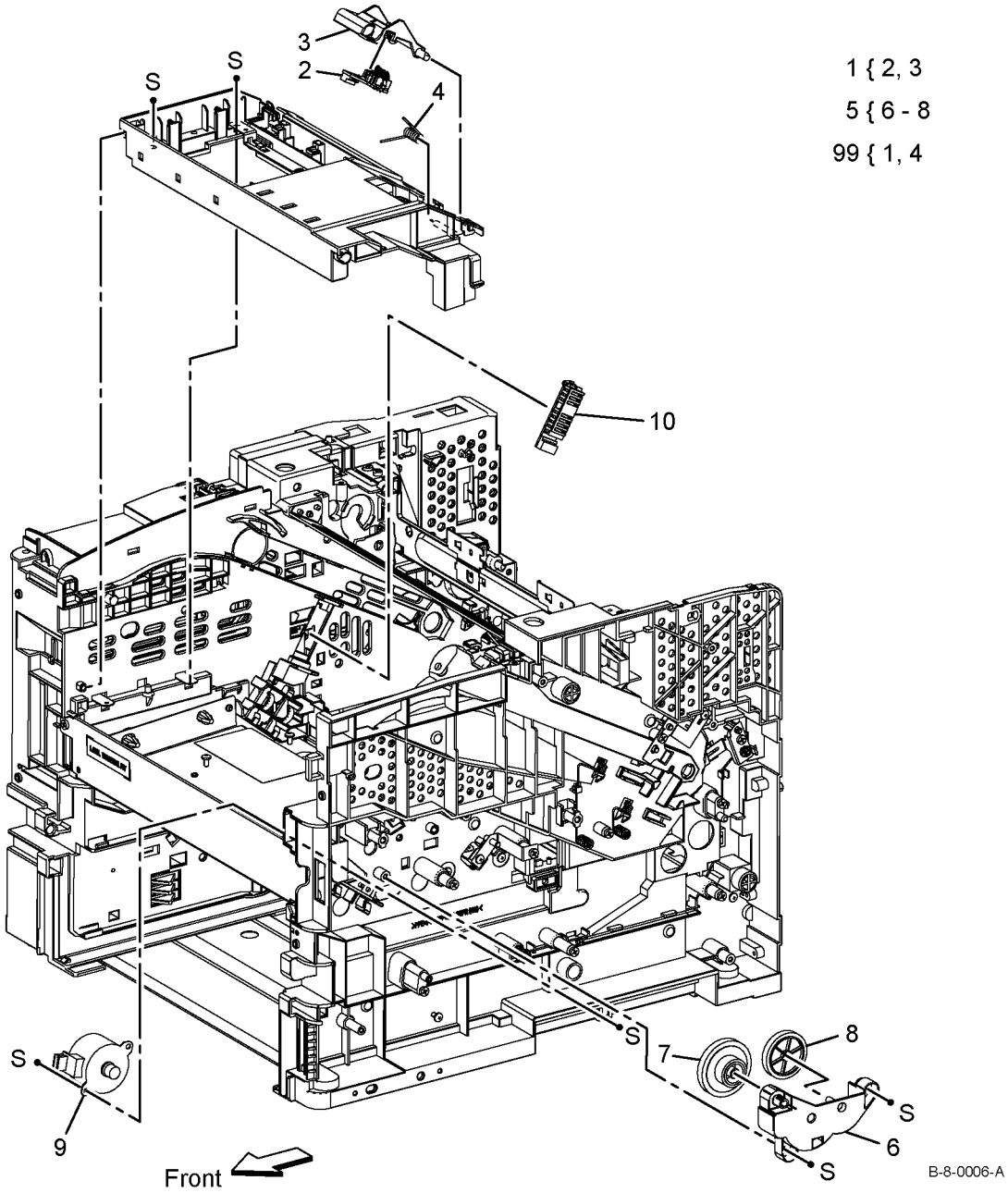

PL 6.1 Transfer

Item	Part	Description
1	859K00950	CRU transfer roll assembly B400 (REP 6.2) / B405 (REP 6.1)

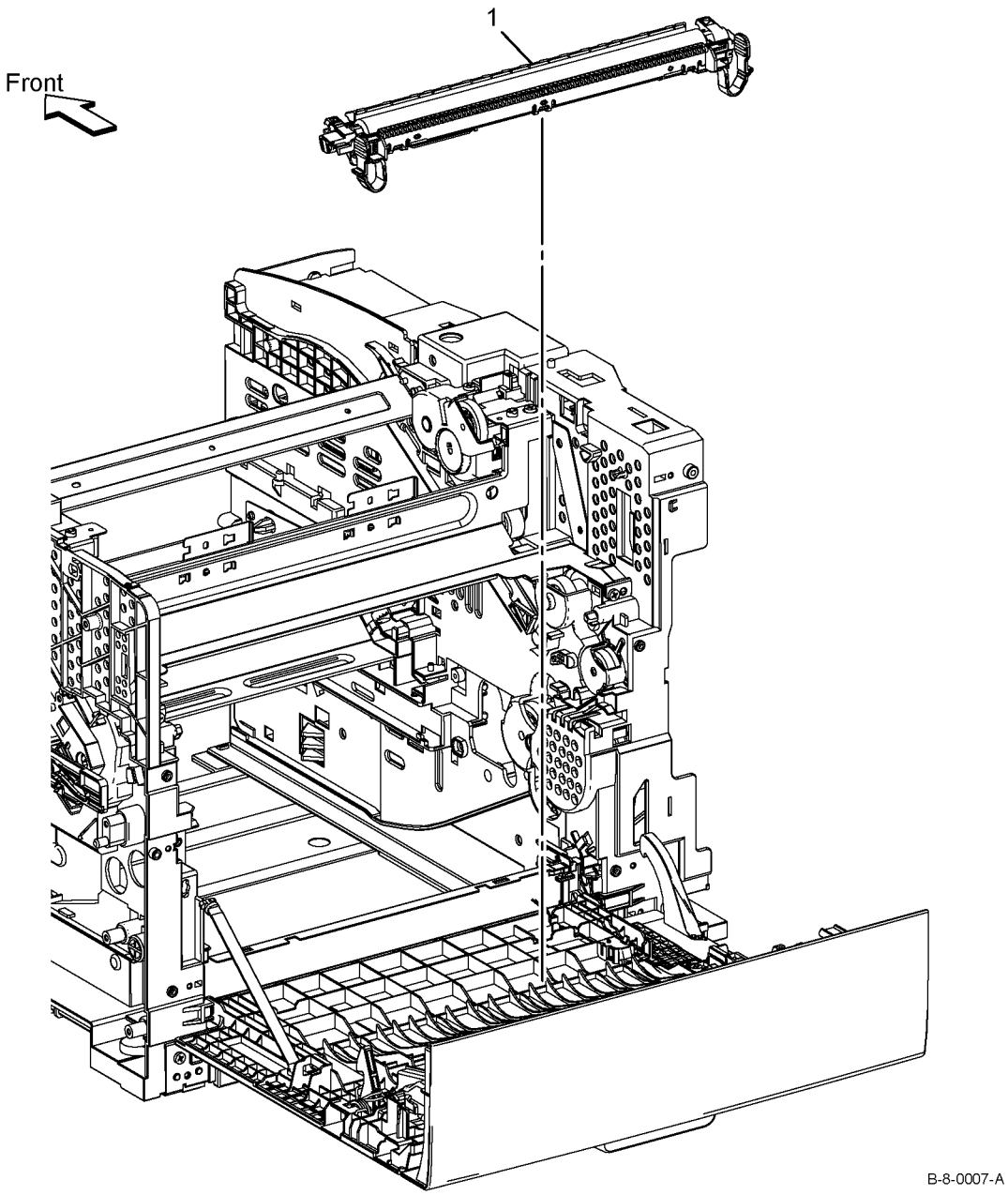

PL 7.1 Fuser

Item	Part	Description
1	126K36851	Fuser (220V) B400 (REP 7.2) / B405 (REP 7.1)
–	126K36841	Fuser (110V) B400 (REP 7.2) / B405 (REP 7.1)
2	115R00119	Fuser Maintenance kit (110V)
–	115R00120	Fuser Maintenance kit (220V)

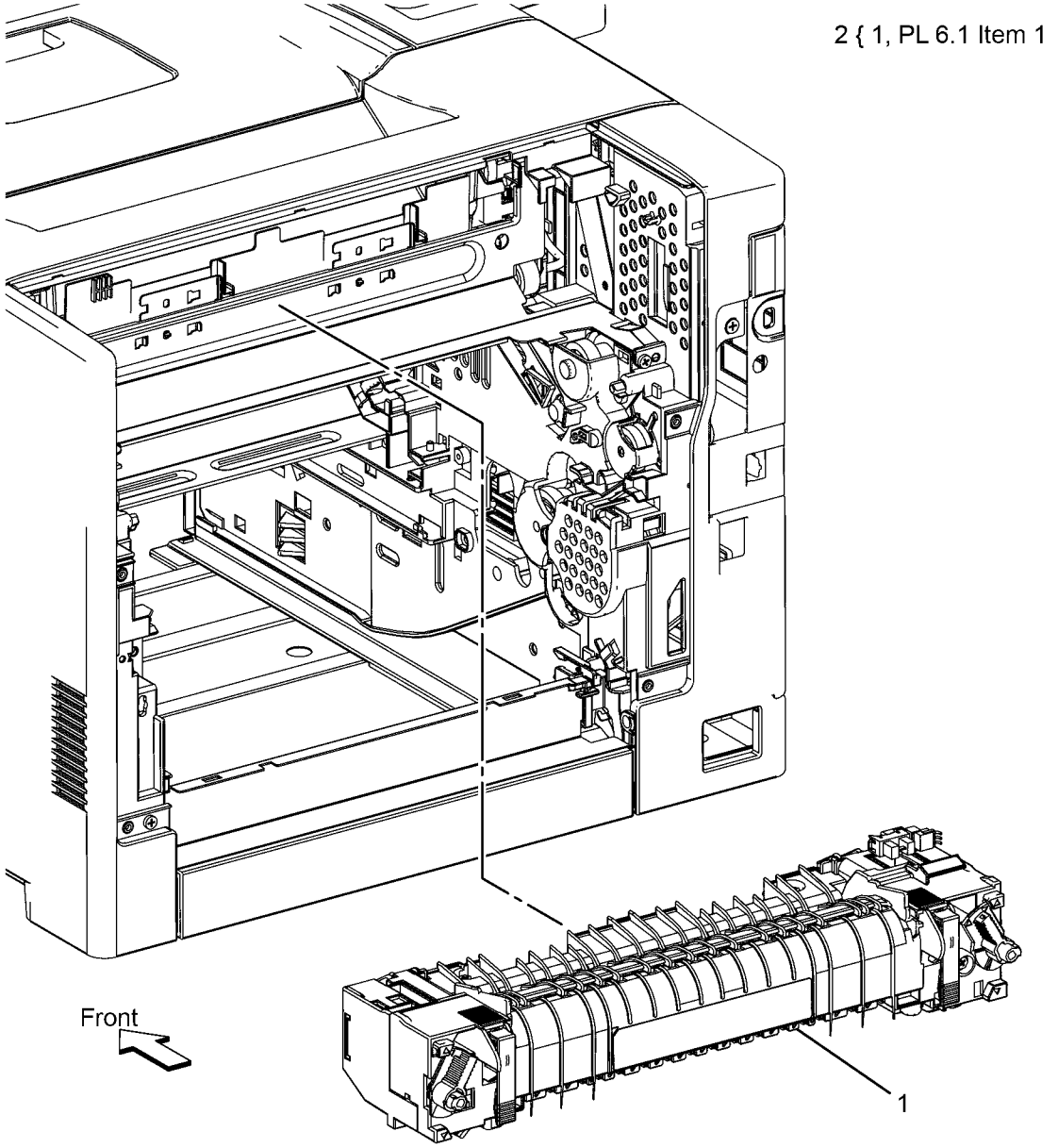

B-8-0008-A

PL 8.1 Xerographics

Item	Part	Description
1	101R00554	Drum cartridge B400 (REP 8.2) / B405 (REP 8.1)
2	106R03586	Black metered toner cartridge - Versalink B400/B405
–	106R03582	Black high capacity toner cartridge - Versalink B400/B405 (NA/XE)
–	106R03580	Black standard capacity toner cartridge - Versalink B400/B405 (NA/XE) (Not Spared)
–	106R03585	Black extra high capacity toner cartridge - Versalink B400/B405 (DMO)
–	106R03584	Black extra high capacity toner cartridge - Versalink B400/B405 (NA/XE)
–	116R00022	Black toner cartridge - Versalink B405/Z (for authorized use only)
–	106R03581	Black standard capacity toner cartridge - Versalink B400/B405 (DMO)
–	106R03583	Black high capacity toner cartridge - Versalink B400/B405 (DMO)

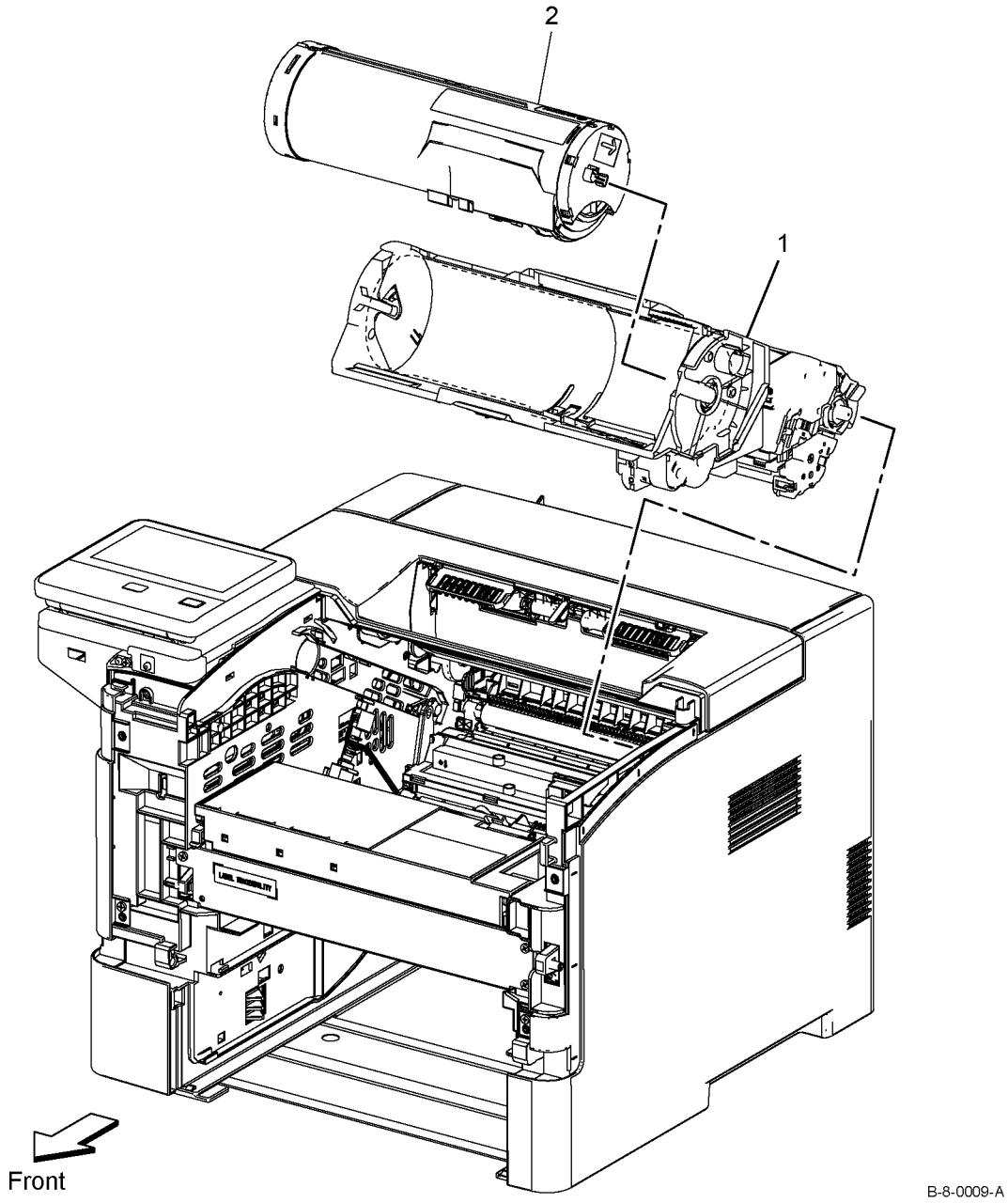

PL 9.2 Tray 1

Item	Part	Description
1	050K77850	Option tray assembly
2	–	Bottom Plate assembly (P/O PL 9.2 Item 1)
3	–	Retard holder assembly B400 (REP 9.2) / B405 (REP 9.1) (P/O PL 9.2 Item 99)
4	–	Feed roll assembly B400 (REP 9.4) / B405 (REP 9.3) (P/O PL 9.2 Item 98)
5	–	Retard friction clutch (P/O PL 9.2 Item 3)
6	–	Option tray retard shaft (P/O PL 9.2 Item 3)
7	–	Option tray retard holder (P/O PL 9.2 Item 3)
8	–	Right side guide assembly (P/O PL 9.2 Item 1)
9	–	Left side guide assembly (P/O PL 9.2 Item 1)
10	–	Pinion gear (P/O PL 9.2 Item 1)
11	–	Bottom lock cover (P/O PL 9.2 Item 1)
12	–	Bottom lock rack (P/O PL 9.2 Item 1)
13	–	Bottom lock pinion gear (P/O PL 9.2 Item 1)
14	–	Bottom lock lever gear (P/O PL 9.2 Item 1)
15	–	Bottom lock lever (P/O PL 9.2 Item 1)
16	–	Bottom lock gear (P/O PL 9.2 Item 1)
17	–	Bottom lock spring (P/O PL 9.2 Item 1)
18	–	Lock spring (P/O PL 9.2 Item 1)
19	–	Left lock actuator (P/O PL 9.2 Item 1)
20	–	Not used
21	–	Upper bottom spring (P/O PL 9.2 Item 1)
22	–	MSI retard spring holder (P/O PL 9.2 Item 1)
23	–	Option tray retard spring (P/O PL 9.2 Item 1)
24	–	Upper lift rack (P/O PL 9.2 Item 1)
25	–	Base housing (P/O PL 9.2 Item 1)
26	–	End extension lever (P/O PL 9.2 Item 1)
27	–	End guide assembly (P/O PL 9.2 Item 1)
28	–	End housing (P/O PL 9.2 Item 1)
29	–	Not used
30	–	Tray handle (P/O PL 9.2 Item 1)
31	–	Pad (P/O PL 9.2 Item 1)
32	–	Label (P/O PL 9.2 Item 1)
33	–	Label (P/O PL 9.2 Item 1)
34	–	Traceability label (P/O PL 9.2 Item 1)
35	–	Label (P/O PL 9.2 Item 1)
36	–	GD handle (P/O PL 9.2 Item 1)
37	–	Roll retard assembly (with instruction) (P/O PL 9.2 Item 99)
38	–	End guide handle (P/O PL 9.2 Item 1)
39	848E93660	Dust cover
98	604K11192	Feed roller assembly kit (Kit Contains 3 Feed Roller assembly and Instruction)
99	604K78360	Option tray retard holder assembly kit (Kit contains cassette retard holder assembly and Instruction)

1 { 2 - 36, 38

3 { 4 - 7

98 { 4 x 3 PCS

99 { 3, 37

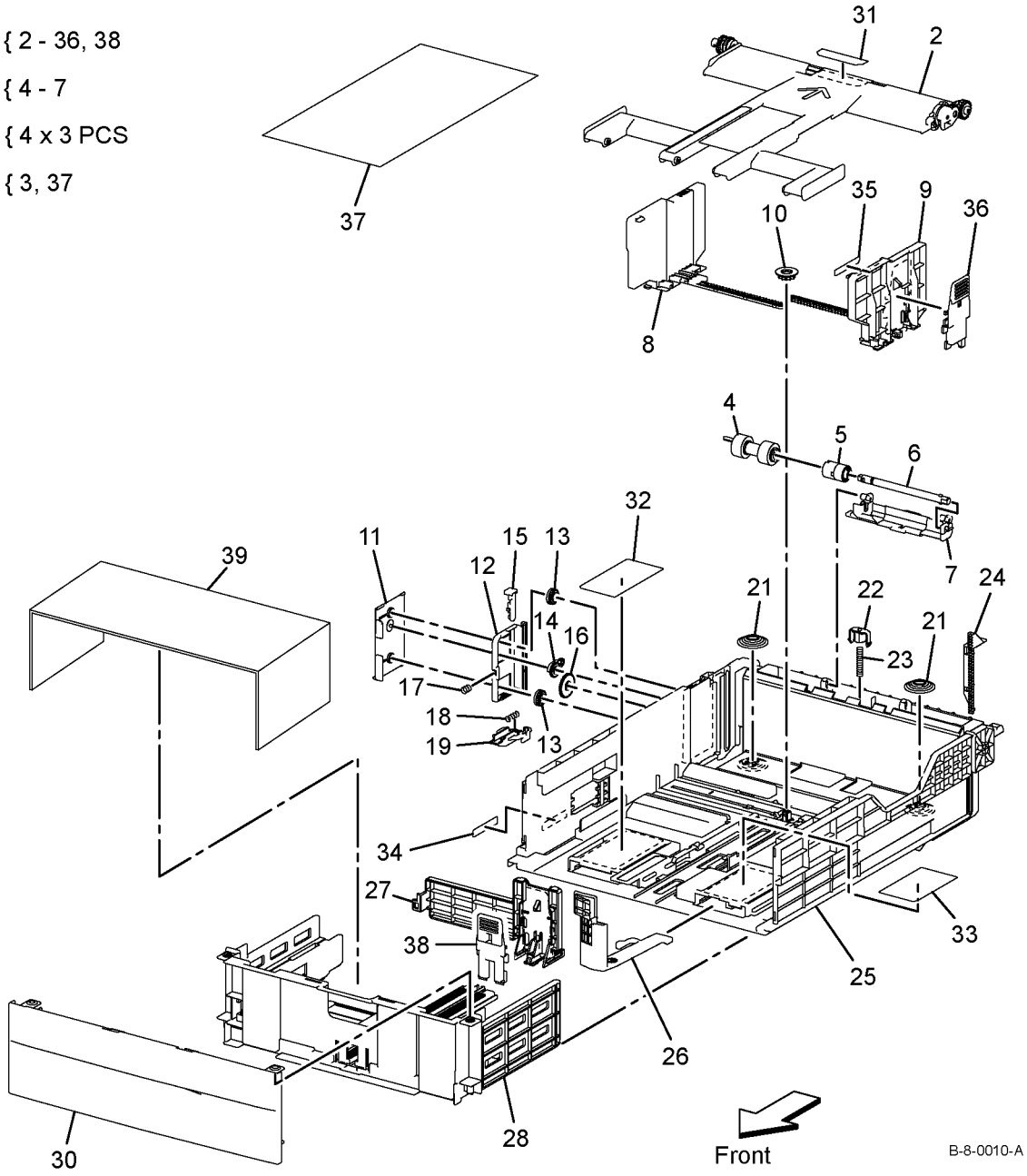

PL 11.1A Option Feeder (1 of 4) - B400

Item	Part	Description
1	–	Option feeder assembly (P/O PL 11.1A Item 99) (REP 11.2)
2	–	Left side cover (P/O PL 11.1A Item 99) (REP 11.4)
3	–	Not used
4	–	Not used
5	960K67514	Option feeder PWBA assembly (REP 11.6)
6	–	Not used
7	007K18020	Option feeder drive assembly
8	005K83210	Option feeder clutch assembly (REP 11.16)
9	–	Not used
10	–	Option feeder gear (P/O PL 11.1A Item 7)
11	–	Tray motor harness assembly (P/O PL 11.1A Item 99)
12	–	Not used
13	–	Right side cover (P/O PL 11.1A Item 99) (REP 11.8)
14	–	Foot (P/O PL 11.1A Item 99)
15	050K71211	Option feeder tray assembly (REF: PL 11.3)
16	–	Top cover - LIP (P/O PL 11.1A Item 99)
17	–	Rear cover (P/O PL 11.1A Item 99) (REP 11.10)
18	–	Feeder harness assembly 1 (P/O PL 11.1A Item 99)
19	–	Motor assembly (MOT - Motor) (P/O PL 11.1A Item 7) (REP 11.12)
20	059K86170	Option feeder (REF: PL 11.2) (REP 11.14)
21	–	Not used
22	–	Not used
23	–	Not used
24	–	Not used
25	–	Not used
26	–	Lock screw (P/O PL 11.1A Item 99)
27	–	Option tray stopper (P/O PL 11.1A Item 99)
28	–	Not used
29	–	Not used
30	–	Rear cover spring (P/O PL 11.1A Item 99)
31	–	Not used
32	–	Not used
33	–	C2 turn harness assembly (P/O PL 11.1A Item 99)
34	–	Pin relocate bracket (P/O PL 11.1A Item 99)
35	–	Option feeder rear under cover (P/O PL 11.1A Item 99)
99	059K82011	Option feeder assembly

1 { 15, 99

7 { 10, 19

99 { 2, 5, 7, 8, 10, 11, 13, 14, 16 - 20, 26, 27, 30, 33 - 35

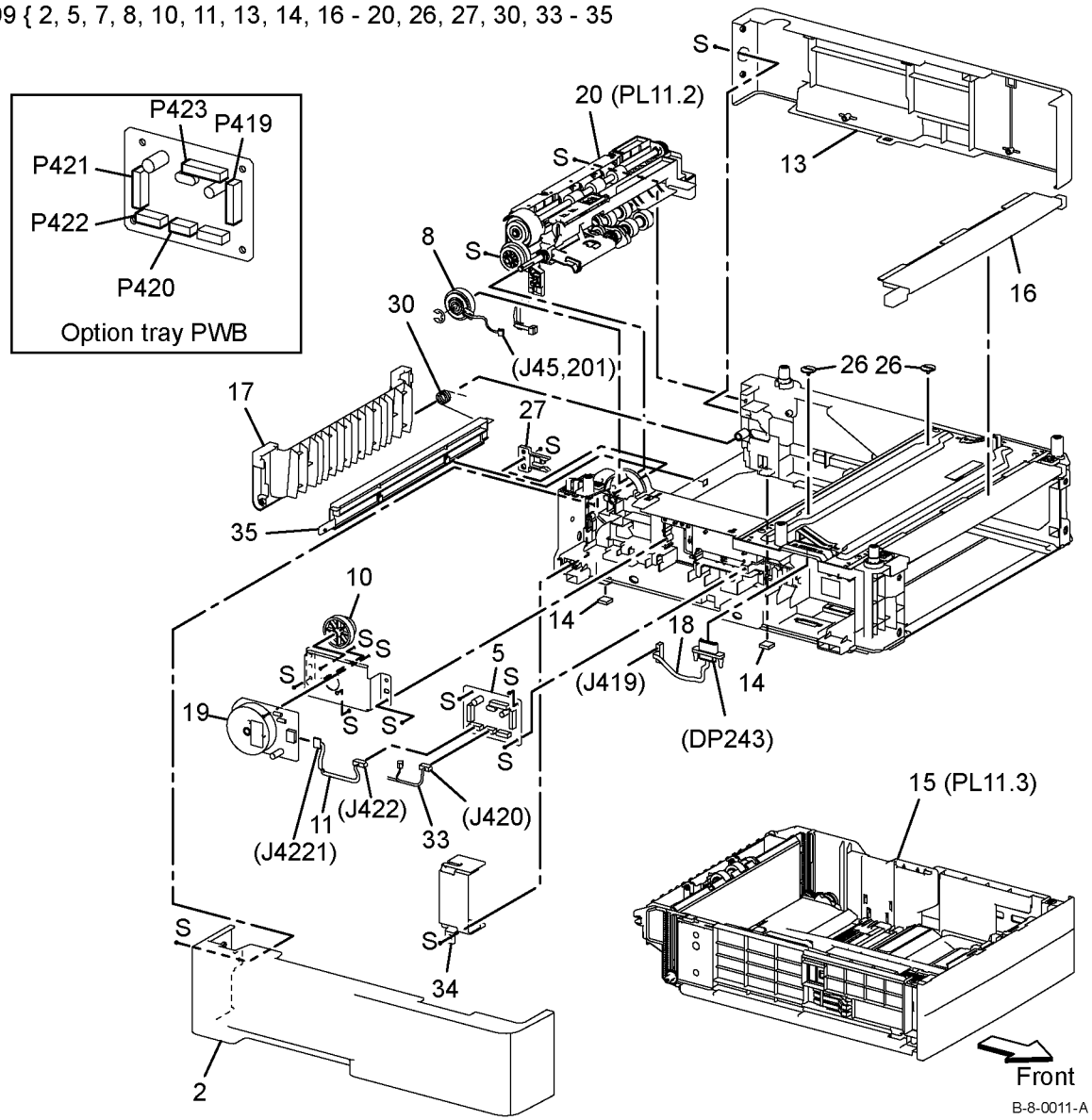

PL 11.1B Option Feeder (1 of 4) - B405

Item	Part	Description
1	–	Option feeder assembly (P/O PL 11.1B Item 99) (REP 11.1)
2	–	Option feeder left side cover (P/O PL 11.1B Item 99) (REP 11.3)
3	–	Not used
4	–	Not used
5	960K67514	Option tray PWBA assembly (REP 11.5)
6	–	Not used
7	007K18020	Option feeder drive assembly
8	005K83210	Option feeder clutch assembly (REP 11.15)
9	–	Not used
10	–	Option feeder gear (P/O PL 11.1B Item 7)
11	–	Tray motor harness assembly (P/O PL 11.1B Item 99)
12	–	Not used
13	–	Option feeder right side cover (P/O PL 11.1B Item 99) (REP 11.7)
14	–	Foot (P/O PL 11.1B Item 99)
15	050K71211	Option feeder tray assembly (REF: PL 9.2 Item 1, PL 11.3 Item 1)
16	–	Top cover - LIP (P/O PL 11.1B Item 99)
17	–	Option feeder rear cover (P/O PL 11.1B Item 99) (REP 11.9)
18	–	Feeder harness assembly 1 (P/O PL 11.1B Item 99)
19	–	Motor assembly (P/O PL 11.1B Item 7) (REP 11.11)
20	059K86170	Option feeder (REF: PL 11.2) (REP 11.13)
21	–	Not used
22	–	Not used
23	–	Not used
24	–	Not used
25	–	Not used
26	–	Lock screw (P/O PL 11.1B Item 99)
27	803E10840	CST stopper
28	–	Not used
29	–	Not used
30	–	Rear cover spring (P/O PL 11.1B Item 99)
31	–	Feeder drawer 2 harness assembly (P/O PL 11.1B Item 99)
32	–	Not used
33	–	C2 turn harness assembly (P/O PL 11.1B Item 99)
34	–	Option feeder bracket locate pin (P/O PL 11.1B Item 99)
35	–	Option feeder rear under cover (P/O PL 11.1B Item 99)
99	059K82021	Option feeder assembly

1 { 15, 99

7 { 10, 19

99 { 2, 5, 7, 8, 10, 11, 12, 13, 14, 16 - 20, 26, 27, 30, 31, 33 - 35

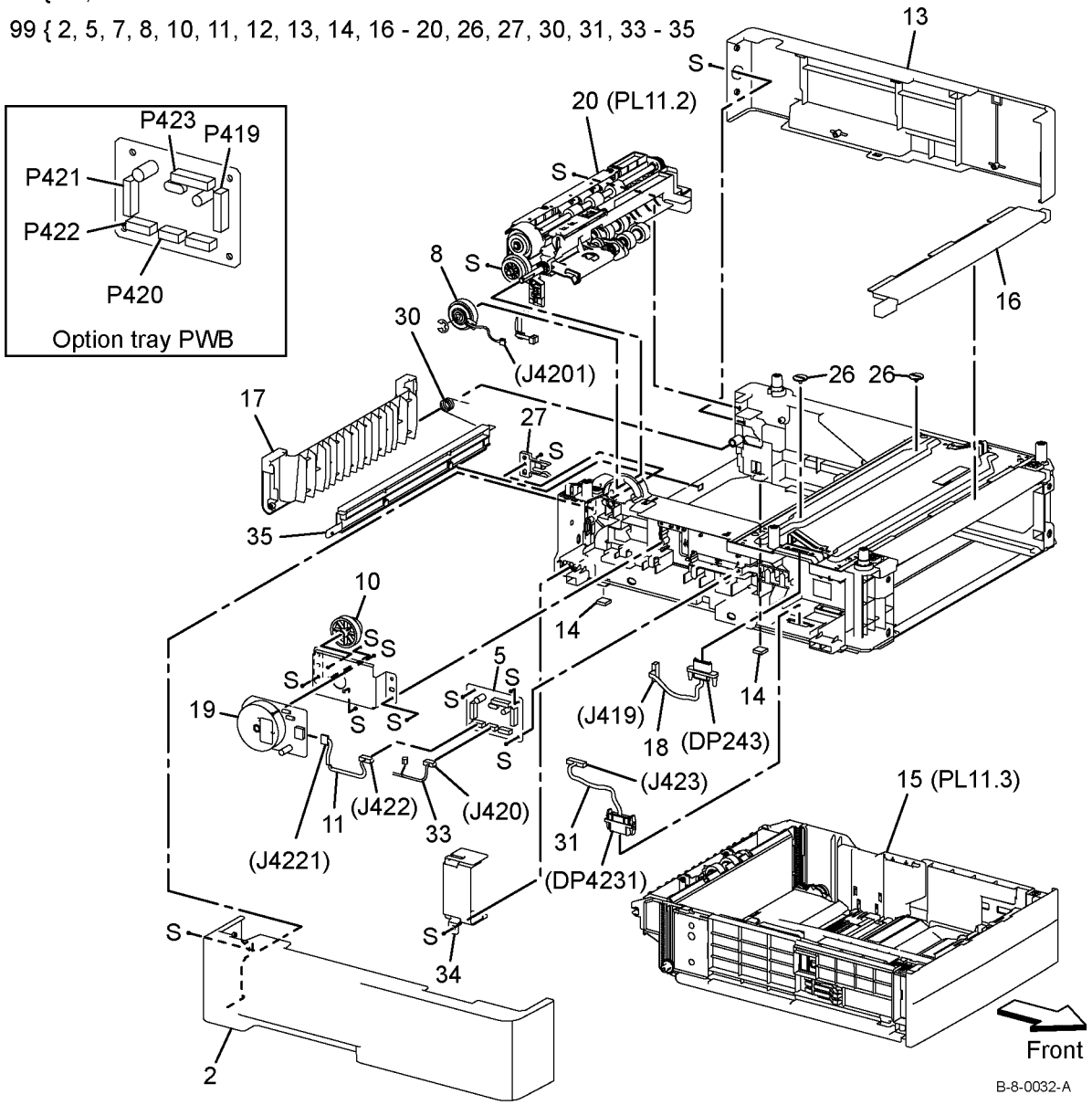

PL 11.2 Option Feeder (2 of 4)

Item	Part	Description
1	–	No paper sensor cover (Not Spared)
2	930W00123	No paper sensor B400 (REP 11.22) / B405 (REP 11.21)
3	–	No paper sensor harness assembly (Not Spared)
4	–	Upper chute (Not Spared)
5	–	Nudger bearing (Not Spared)
6	–	Nudger support assembly (Not Spared)
7	–	Oneway feed clutch (Not Spared)
8	–	Feed gear (Not Spared)
9	–	Not used
10	–	Nudger idler gear (Not Spared)
11	–	No paper actuator B400 (REP 11.26) / B405 (REP 11.25) (Not Spared)
12	–	Nudger shaft (Not Spared)
13	–	Feed roller assembly B400 (REP 11.18) / B405 (REP 11.17) (P/O PL 11.2 Item 98) (Kit Contains 3 Feed Roller assembly and Instruction)
14	–	Nudger gear (Not Spared)
15	–	Lower chute (Not Spared)
16	–	Feed shaft assembly (Not Spared)
17	–	Not used
18	–	Not used
19	–	Pinch chute assembly (Not Spared)
20	121K48670	Takeaway clutch Assembly B400 (REP 11.20) / B405 (REP 11.19)
21	059K71770	Takeaway roll assembly B400 (REP 11.28) / B405 (REP 11.27)
22	–	Earth Plate
23	–	Nudger spring bracket (Not Spared)
24	–	Harness cover
25	–	Gear shaft
26	–	Option feeder gear
27	–	Nudger spring
98	604K11192	Feed roller assembly kit (Kit Contains 3 Feed Roller assembly and Instruction)

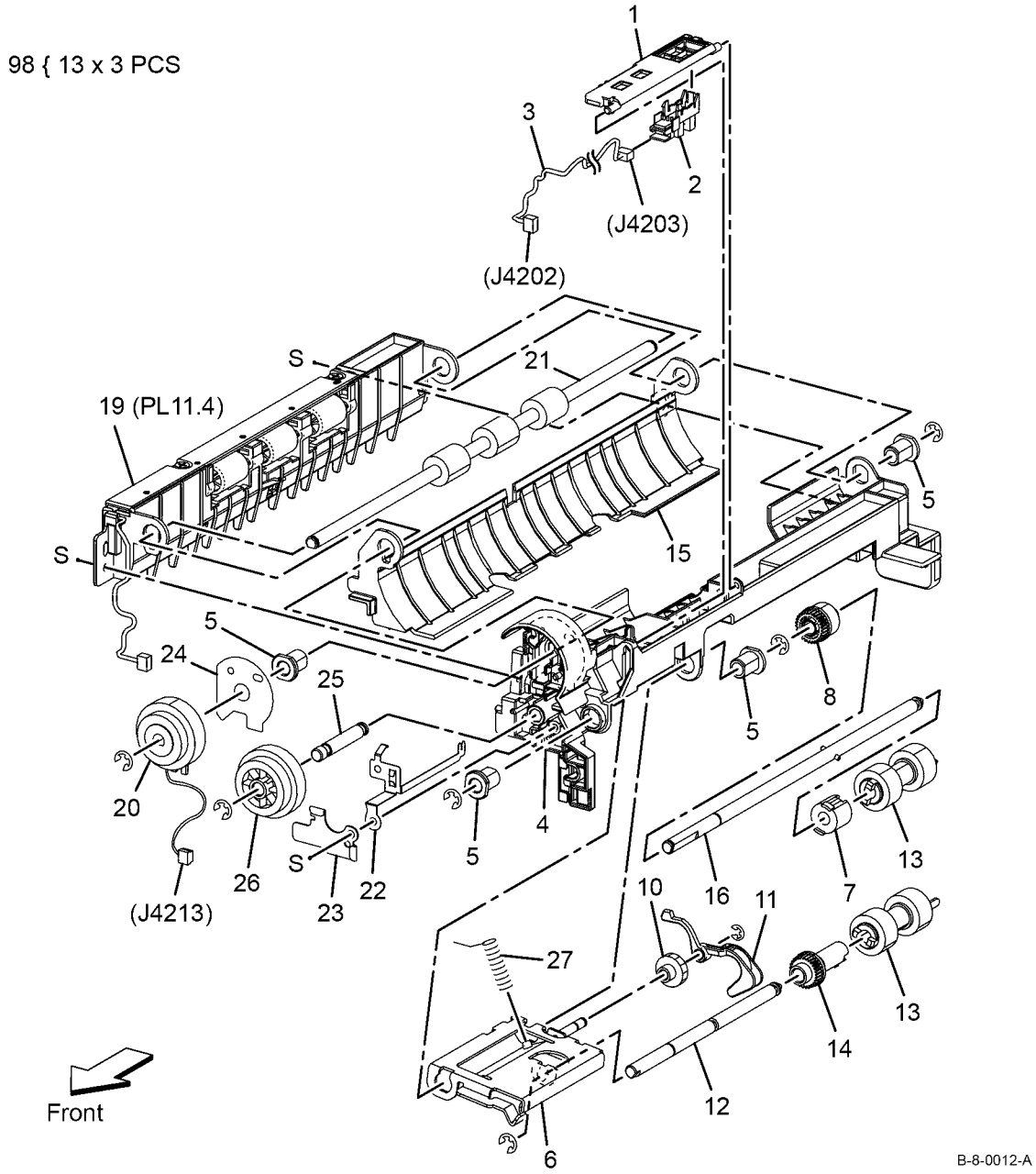

PL 11.3 Option Feeder (3 of 4)

Item	Part	Description
1	050K71211	Option feeder tray assembly
2	–	Bottom Plate assembly (P/O PL 11.3 Item 1)
3	–	Option tray retard holder assembly (P/O PL 11.3 Item 1)
4	–	Feed roller assembly (P/O PL 11.3 Item 98)
5	–	Retard friction clutch (P/O PL 11.3 Item 3)
6	–	Option tray retard shaft (P/O PL 11.3 Item 3)
7	–	Option tray retard holder (P/O PL 11.3 Item 3)
8	–	Right side guide assembly (P/O PL 11.3 Item 1)
9	–	Left side guide assembly (P/O PL 11.3 Item 1)
10	–	Pinion gear (P/O PL 11.3 Item 1)
11	–	Bottom lock cover (P/O PL 11.3 Item 1)
12	–	Bottom lock rack (P/O PL 11.3 Item 1)
13	–	Bottom lock pinion gear (P/O PL 11.3 Item 1)
14	–	Bottom lock lever gear (P/O PL 11.3 Item 1)
15	–	Bottom lock lever (P/O PL 11.3 Item 1)
16	–	Bottom lock gear (P/O PL 11.3 Item 1)
17	–	Bottom lock spring (P/O PL 11.3 Item 1)
18	–	Lock spring (P/O PL 11.3 Item 1)
19	–	Left lock actuator (P/O PL 11.3 Item 1)
20	–	Not used
21	–	Upper bottom spring (P/O PL 11.3 Item 1)
22	–	MSI retard spring holder (P/O PL 11.3 Item 1)
23	–	Option tray retard spring (P/O PL 11.3 Item 1)
24	–	Upper lift rack (P/O PL 11.3 Item 1)
25	–	Base housing (P/O PL 11.3 Item 1)
26	–	End extension lever (P/O PL 11.3 Item 1)
27	–	End guide assembly (P/O PL 11.3 Item 1)
28	–	End housing (P/O PL 11.3 Item 1)
29	–	Not used
30	–	Tray handle (P/O PL 11.3 Item 1)
31	–	Pad (P/O PL 11.3 Item 1)
32	–	Label (P/O PL 11.3 Item 1)
33	–	Label (P/O PL 11.3 Item 1)
34	–	Traceability label (P/O PL 11.3 Item 1)
35	–	Label (P/O PL 11.3 Item 1)
36	–	GD handle (P/O PL 11.3 Item 1)
37	–	Roll retard assembly (with instruction) (P/O PL 11.3 Item 99)
38	–	End guide handle (P/O PL 11.3 Item 1)
39	848E93660	Dust cover
98	604K11192	Feed roller assembly kit (Kit Contains 3 Feed Roller assembly and Instruction)
99	604K78360	Option tray retard holder assembly kit (Kit contains option tray retard holder)

1 { 2 - 36, 38

3 { 4 - 7

98 { 4 x 3 PCS

99 { 3, 37

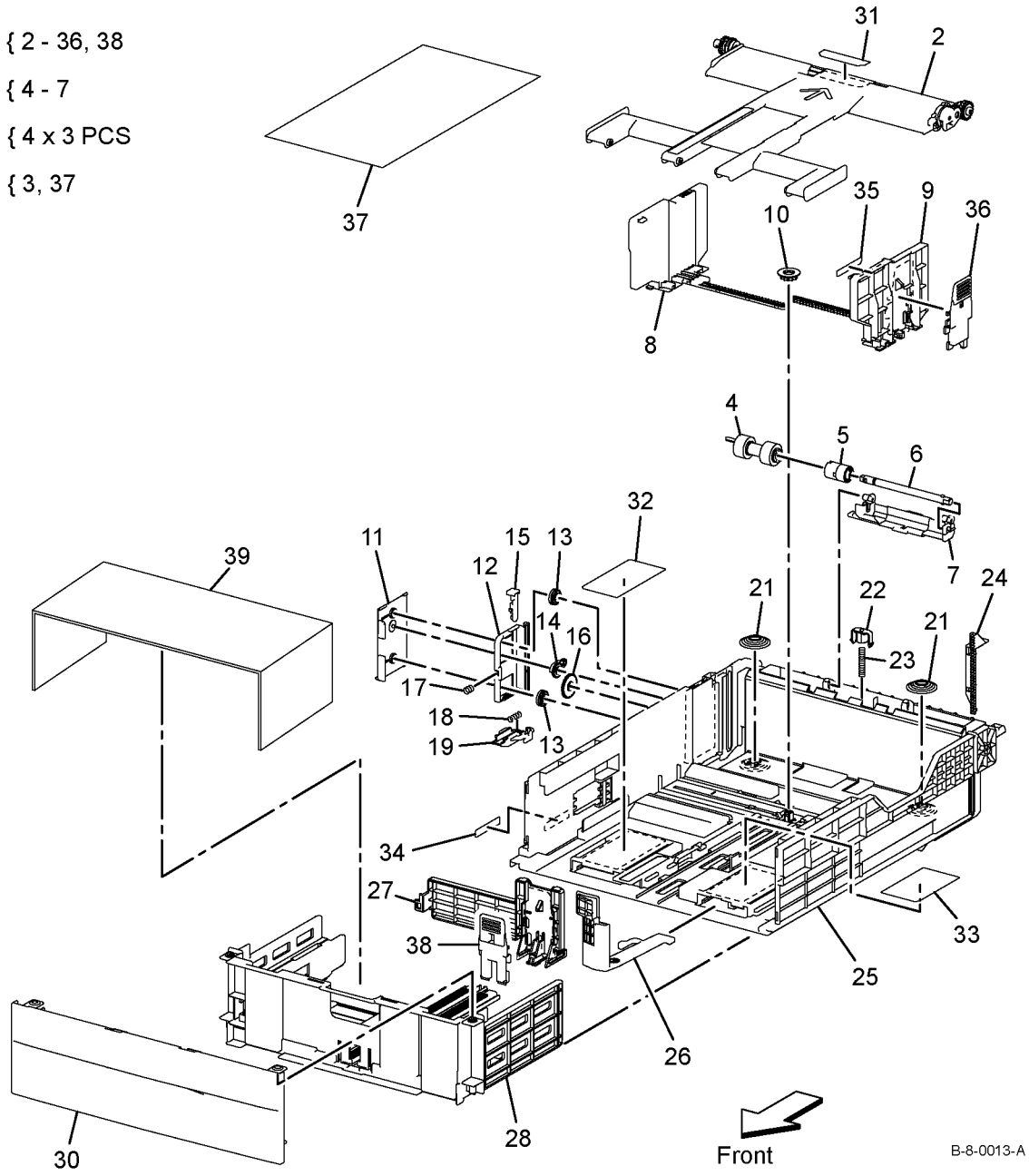

PL 11.4 Option Feeder (4 of 4)

Item	Part	Description
1	–	Pinch chute (Not Spared)
2	–	Pinch roller (Not Spared)
3	–	Chute cover (Not Spared)
4	930W00123	Path sensor B400 (REP 11.24) / B405 (REP 11.23)
5	–	Registration pre-actuator (Not Spared)
6	–	Registration pre-sensor spring (Not Spared)
7	–	Option feeder registration harness assembly (Not Spared)
8	–	Pinch spring (Not Spared)

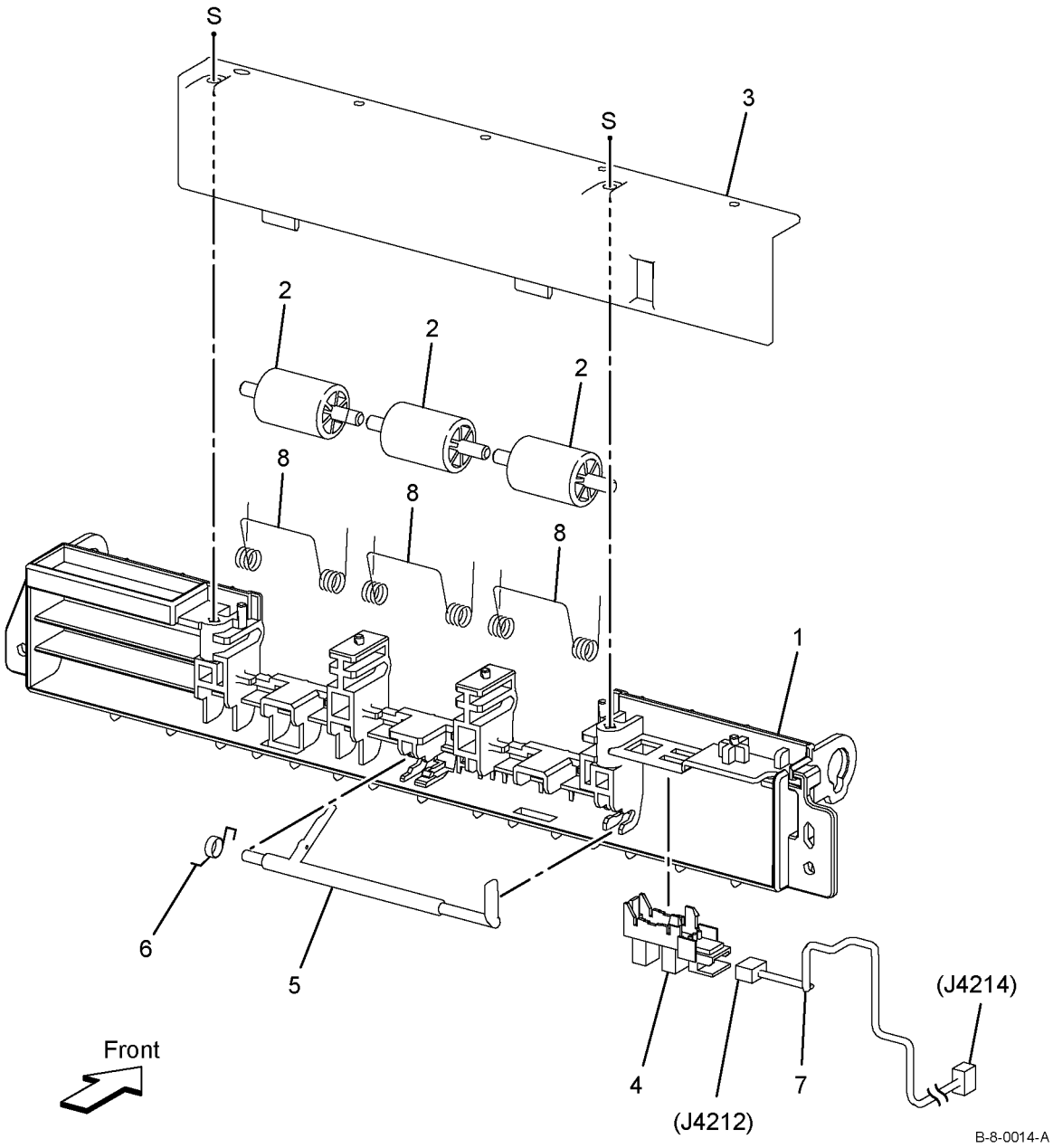

PL 13.1 MSI (1 of 2)

Item	Part	Description
1	–	MSI In stopper (P/O PL 13.1 Item 97)
2	–	MSI In lock (P/O PL 13.1 Item 97)
3	–	MSI top frame (P/O PL 13.1 Item 97)
4	–	MSI no paper actuator (P/O PL 13.1 Item 97)
5	121E23570	MSI feed solenoid B400 (REP 13.4) / B405 (REP 13.3)
6	–	MSI segment gear 1 (P/O PL 13.1 Item 95)
7	–	MSI segment gear 2 (P/O PL 13.1 Item 95)
8	–	MSI feed bearing (Not Spared)
9	–	MSI lifter arm (Not Spared)
10	–	MSI lifter stopper (Not Spared)
11	–	MSI feed spring (Not Spared)
12	–	MSI feed gear (Not Spared)
13	–	MSI lifter lever (Not Spared)
14	–	MSI NF spring (Not Spared)
15	059K78790	Pick up holder assembly B400 (REP 13.6) / B405 (REP 13.5)
16	–	Pick up holder (P/O PL 13.1 Item 15)
17	–	Feeder idler gear (P/O PL 13.1 Item 15)
18	–	Feed roll assembly (P/O PL 13.1 Item 15)
19	–	Rubber roll (P/O PL 13.1 Item 18)
20	–	Core roll (P/O PL 13.1 Item 18)
21	–	MSI feed shaft (Not Spared)
22	–	MSI feed bearing (Not Spared)
23	–	Pickup flange (Not Spared)
95	–	MSI solenoid assembly kit (Not Spared)
97	801K57914	MSI top frame assembly

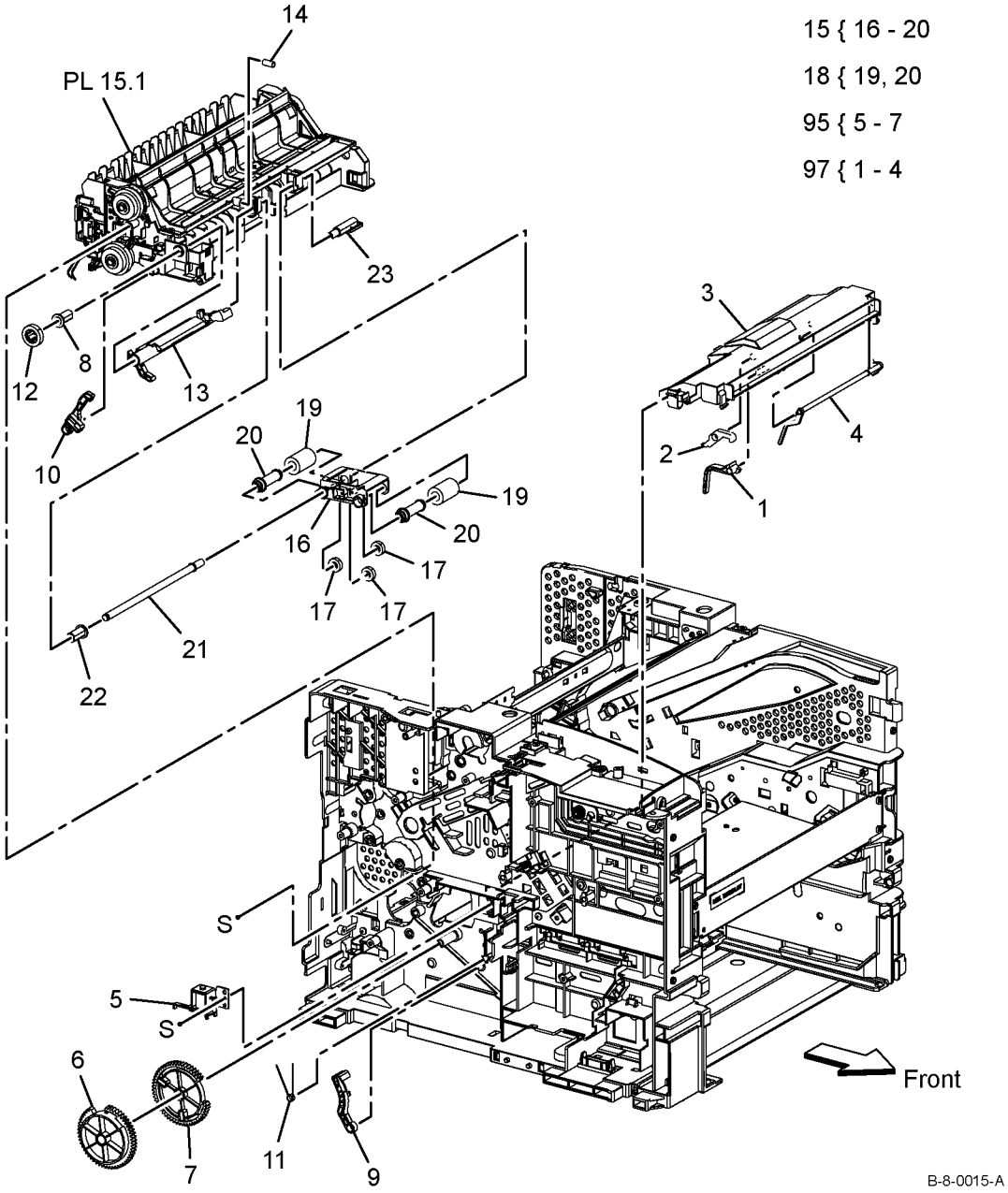

PL 13.2 MSI (2 of 2)

Item	Part	Description
1	–	MSI base tray (P/O PL 13.2 Item 96)
2	–	MSI end guide (P/O PL 13.2 Item 96)
3	–	MSI cover B400 (REP 13.2) / B405 (REP 13.1) (P/O PL 13.2 Item 99)
4	–	MSI end holder (P/O PL 13.2 Item 96)
5	–	Pad (P/O PL 13.2 Item 96)
6	–	Left side guide (P/O PL 13.2 Item 96)
7	–	Right side guide (P/O PL 13.2 Item 96)
8	–	Paper feeding label (P/O PL 13.2 Item 99)
9	050K77860	MSI tray assembly
10	–	Roller retard spring (P/O PL 13.2 Item 98)
11	–	150 sheet stopper spring (P/O PL 13.2 Item 96)
12	–	150 sheet lock (P/O PL 13.2 Item 96)
13	–	MSI retard guide (P/O PL 13.2 Item 96)
14	–	150 sheet stopper (P/O PL 13.2 Item 96)
15	–	Roll retard holder (P/O PL 13.2 Item 98)
16	–	Roll retard roll assembly B400 (REP 13.2) / B405 (REP 13.1) (P/O PL 13.2 Item 98)
17	–	Friction clutch assembly (P/O PL 13.2 Item 98)
18	–	MSI Mid paper stopper spring (P/O PL 13.2 Item 96)
19	–	Side guide rack (P/O PL 13.2 Item 96)
20	–	Pinion gear (P/O PL 13.2 Item 96)
96	–	MSI frame assembly kit (Not Spared)
98	604K78371	MSI retard roll assembly kit
99	–	MSI cover kit (Not Spared)

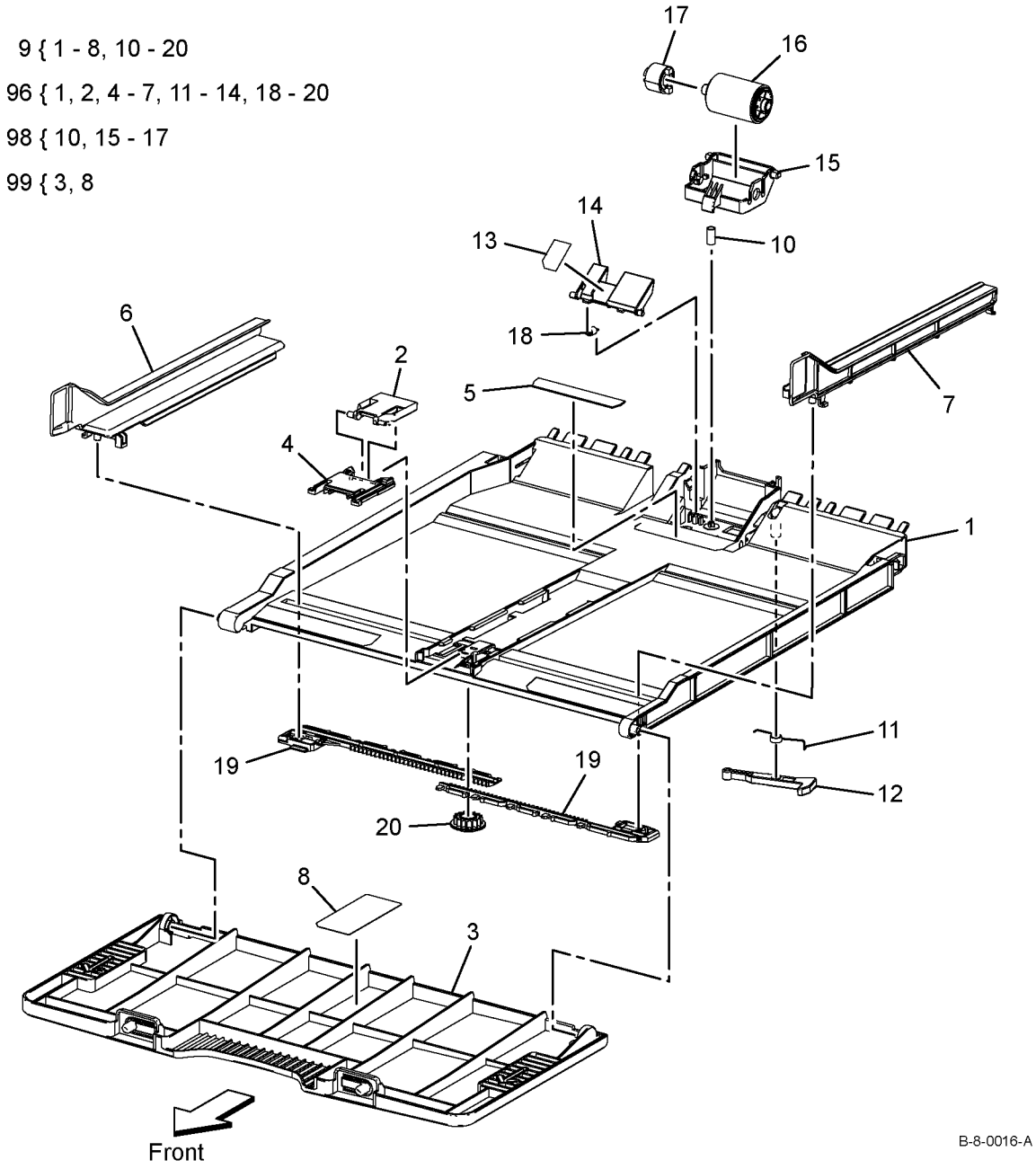

PL 14.1 Duplex

Item	Part	Description
1	–	Duplex bearing (P/O PL 14.1 Item 12)
2	–	Duplex roll assembly (P/O PL 14.1 Item 12)
3	–	DTS Earth spring (P/O PL 14.1 Item 12)
4	–	Duplex gear (P/O PL 14.1 Item 12)
5	–	Duplex pinch roll (P/O PL 14.1 Item 12)
6	–	Duplex pinch spring (P/O PL 14.1 Item 12)
7	–	In duplex chute (P/O PL 14.1 Item 12)
8	–	Transfer chute (P/O PL 14.1 Item 12)
9	–	Not used
10	–	Not used
11	–	Not used
12	054K48100	Duplex chute assembly B400 (REP 14.2) / B405 (REP 14.1)
13	–	BTR spring cap (P/O PL 14.1 Item 12)
14	–	BTR spring (P/O PL 14.1 Item 12)

12 { 1 - 8, 13,14

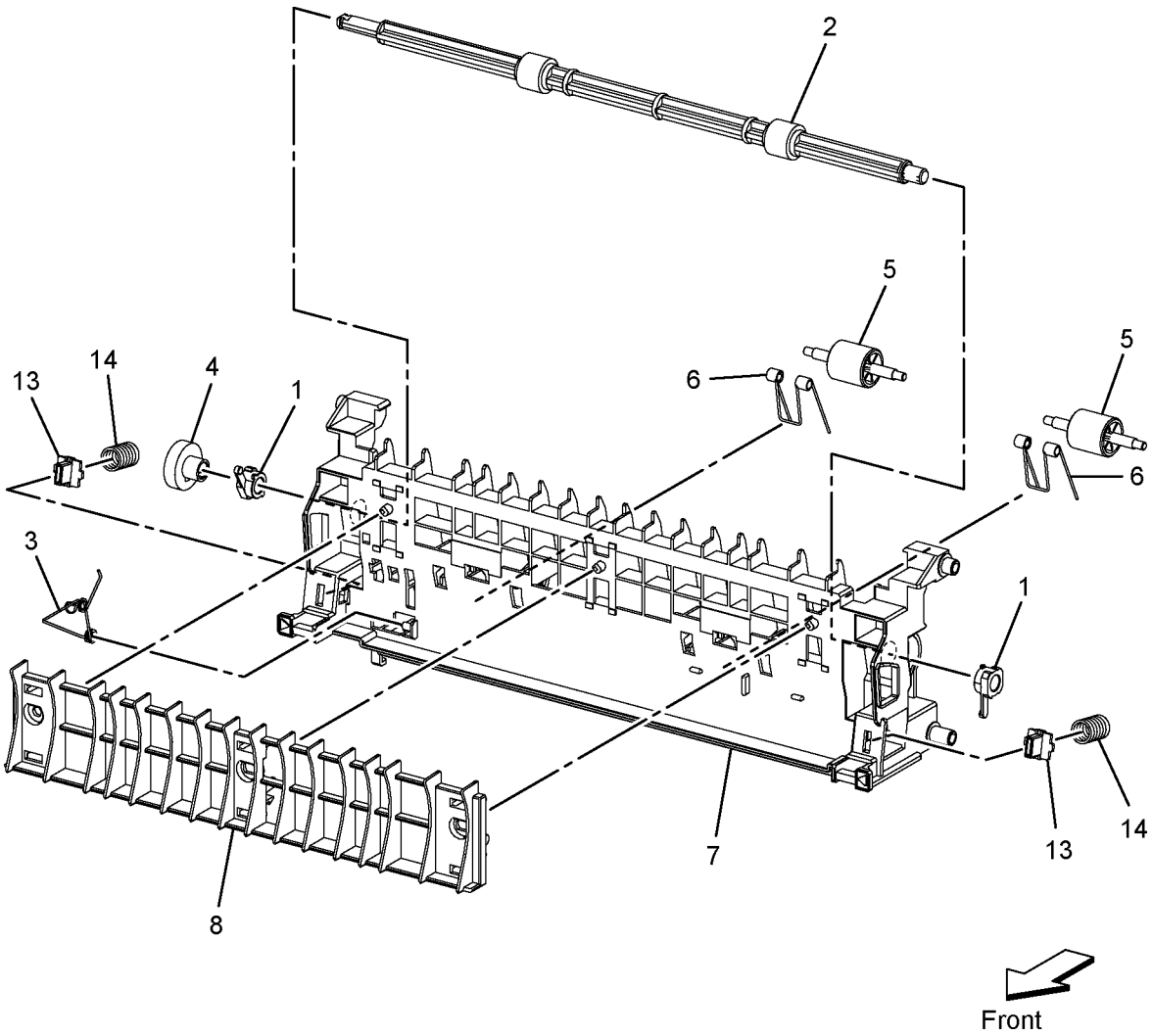

B-8-0017-A

PL 15.1A Registration (1 of 3) - B400

Item	Part	Description
1	–	Duplex lower chute assembly (P/O PL 15.1A Item 97)
2	–	Duplex lower chute (P/O PL 15.1A Item 97)
3	–	Interlock spring (P/O PL 15.1A Item 97)
4	–	Interlock harness assembly (P/O PL 15.1A Item 97)
5	–	Not used
6	059K79334	Registration transport assembly (REP 15.2)
7	–	Not used
8	–	Registration out earth plate (Not Spared)
9	–	Rear fan connector holder (Not Spared)
10	–	Not used
11	803E13351	Cassette stopper
97	604K85740	Rear interlock switch assembly (REP 15.4)

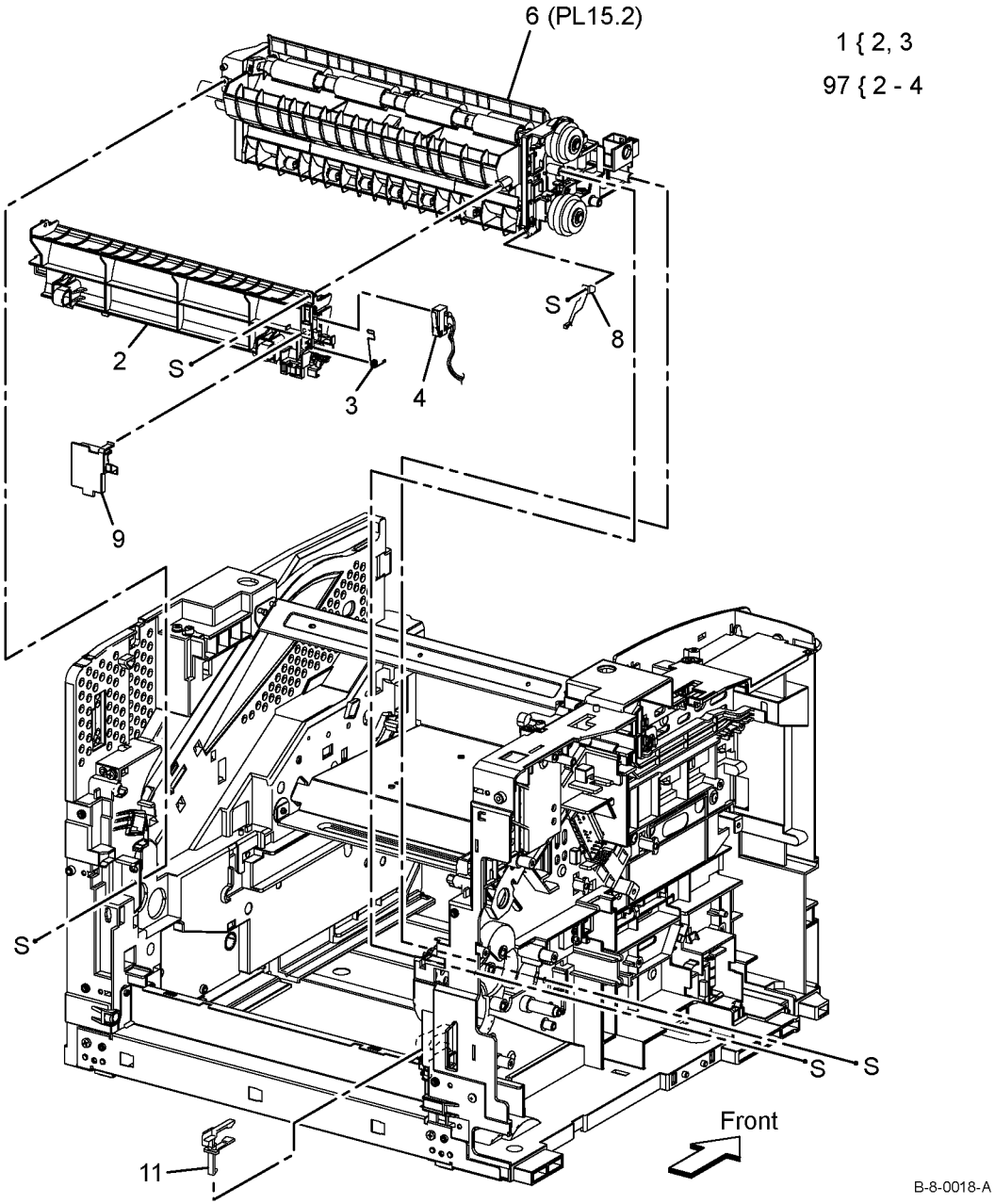

PL 15.1B Registration (1 of 3) - B405

Item	Part	Description
1	–	Duplex lower chute assembly (Not Spared)
2	–	Duplex lower chute (P/O PL 15.1B Item 97)
3	–	Not used
4	–	Interlock harness assembly (P/O PL 15.1B Item 97)
5	–	Interlock spring (P/O PL 15.1B Item 97)
6	059K79334	Registration transport assembly (REF: PL 15.2) (REP 15.1)
7	–	Tray lock (not shown) (Not Spared)
8	–	Registration out earth plate (Not Spared)
9	–	Rear fan connector holder (Not Spared)
10	–	Not used
11	803E13351	Cassette stopper
97	604K85750	Rear interlock switch assembly (REP 15.3)

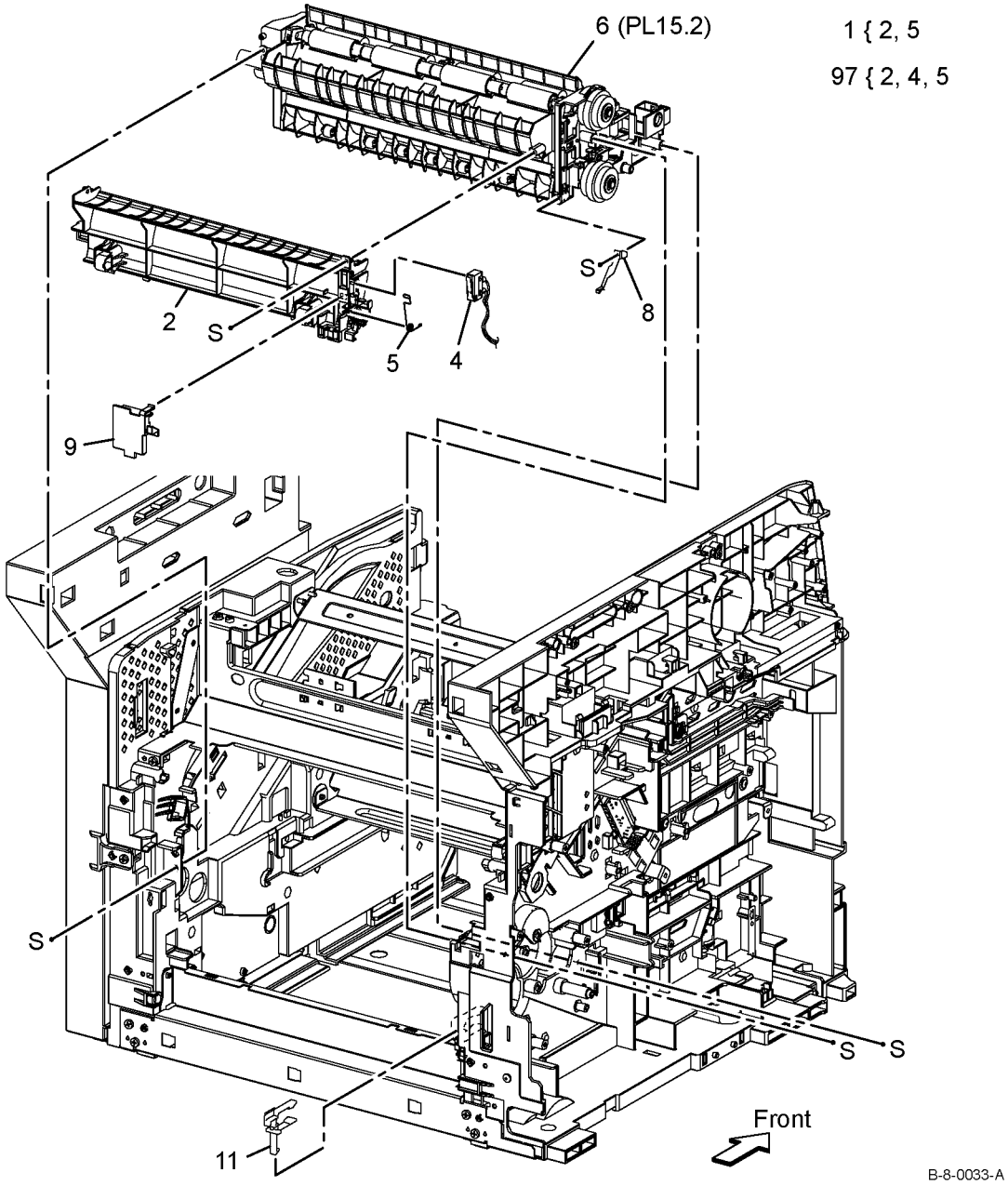

PL 15.2 Registration (2 of 3)

Item	Part	Description
1.	–	Registration in chute (Not Spared)
2.	–	2 Support roll (P/O PL 15.2 Item 41)
3.	–	Registration spring (Not Spared)
4.	121K51870	Registration clutch
5.	–	Registration Earth bearing (Not Spared)
6.	059K74581	Rubber roll assembly B400 (REP 15.10) / B405 (REP 15.9)
7.	–	Right registration bearing (Not Spared)
8.	–	Registration pinch roll assembly (Not Spared)
9.	–	Registration out roll assembly (Not Spared)
10.	–	Mid lower feed chute (Not Spared)
11.	–	Not used
12.	–	Registration chute (P/O PL 15.2 Item 41)
13.	–	Not used
14.	055E60433	Registration sensor shutter
15.	–	Not used
16.	121K51880	Tray feed clutch
17.	–	Not used
18.	–	MSI registration actuator (P/O PL 15.2 Item 41)
19.	–	Registration actuator spring (P/O PL 15.2 Item 41)
20.	–	Registration actuator (P/O PL 15.2 Item 41)
21.	–	No paper tray actuator (P/O PL 15.2 Item 41)
22.	–	Not used
23.	–	Not used
24.	–	Not used
25.	–	Not used
26.	–	Not used
27.	–	Not used
28.	–	Not used
29.	–	Not used
30.	–	Not used
31.	–	Not used
32.	–	Not used
33.	–	2 Support roll (Not Spared)
34.	–	Not used
35.	–	No paper tray actuator (P/O PL 15.2 Item 41)
36.	–	Registration pinch shaft (Not Spared)
37.	–	Registration pinch roll (Not Spared)
38.	–	Registration bearing cartridge (Not Spared)
39.	–	Not used
40.	–	Not used
41.	–	Registration chute assembly (Not Spared)
99.	–	Feeder assembly (Not Spared)

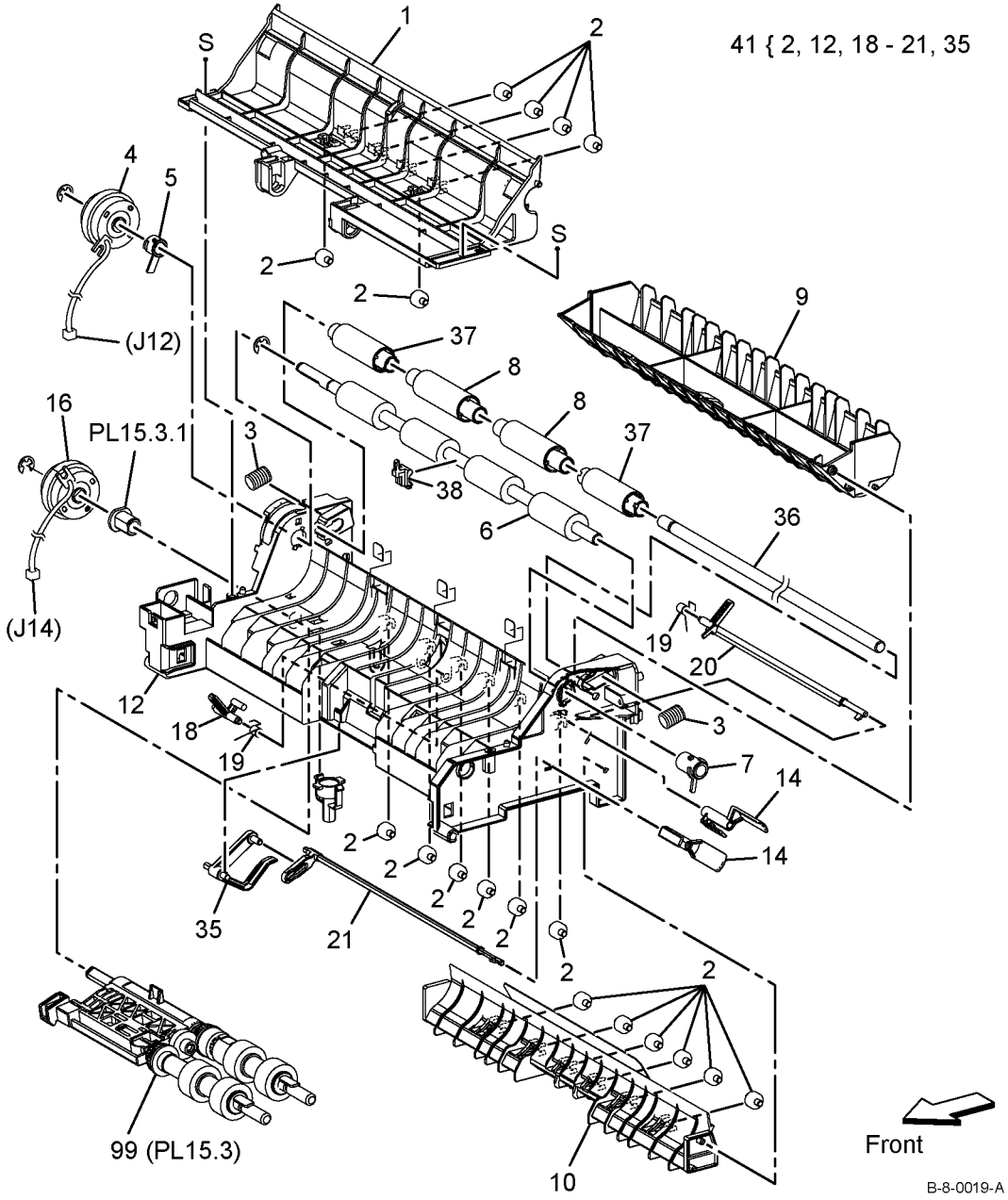

PL 15.3 Registration (3 of 3)

Item	Part	Description
1	–	Nudger bearing (Not Spared)
2	–	Feeder assembly B400 (REP 15.8) / B405 (REP 15.7) (Not Spared)
3	–	Feed gear (Not Spared)
4	–	Oneway feed clutch (Not Spared)
5	–	Feed roll assembly B400 (REP 15.6) / B405 (REP 15.5) (P/O PL 15.3 Item 98)
6	–	Feed shaft assembly (Not Spared)
7	–	Nudger plate (P/O PL 15.3 Item 2)
8	–	Nudger idler gear (P/O PL 15.3 Item 2)
9	–	Nudger gear (P/O PL 15.3 Item 2)
10	–	Nudger shaft (P/O PL 15.3 Item 2)
11	–	Nudger bearing (Not Spared)
98	604K11192	Feed roller assembly kit (Kit Contains 3 Feed Roller assembly and Instruction)

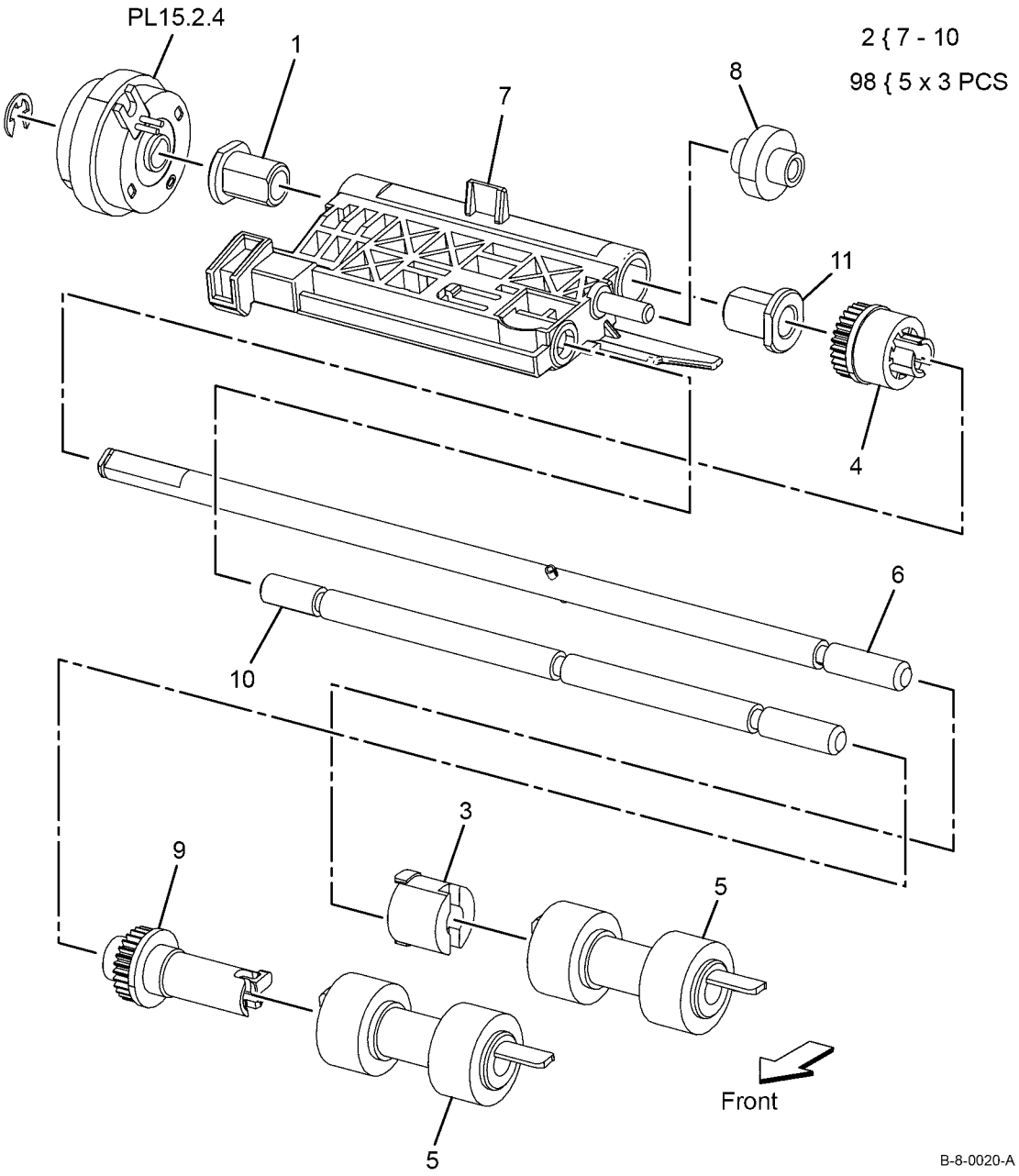

PL 17.1 Exit

Item	Part	Description
1	–	Exit sensor (P/O PL 17.1 Item 99)
2	–	Exit gear (P/O PL 17.1 Item 99)
3	–	Sensor Earth spring (P/O PL 17.1 Item 99)
4	–	Exit bearing (P/O PL 17.1 Item 99)
5	–	Exit roll assembly B400 (REP 17.2) / B405 (REP 17.1) (P/O PL 17.1 Item 99)
6	604K77510	Left pinch assembly B400 (REP 17.4) / B405 (REP 17.3)
7	604K77520	Right pinch assembly B400 (REP 17.4) / B405 (REP 17.3)
8	–	Full stack actuator (P/O PL 17.1 Item 99)
9	930W00123	Full stack sensor
99	054K48381	Exit chute assembly B400 (REP 17.5) / B405 (REP 17.2)

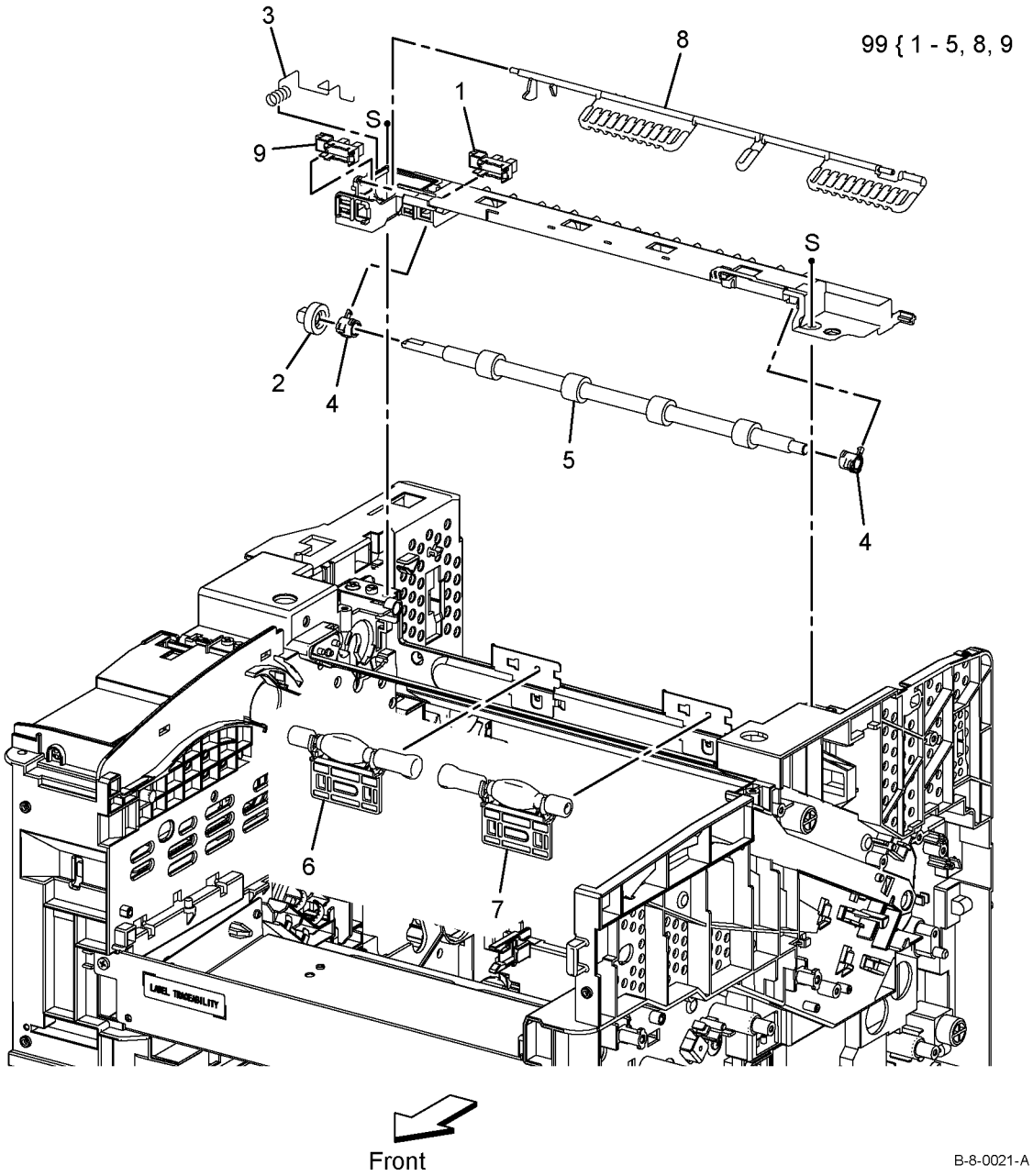

PL 18.1A Electrical (1 of 3) - B400

Item	Part	Description
1	–	Lower window plate (Not Spared)
2	–	Wifi release lever (Not Spared)
3	–	Top plate (Not Spared)
4	–	HDD bracket (Not Spared)
5	607K11340	ESS PWBA (Never replace both MCU and ESS pwbs at the same time) (W/ TAG 001) (REP 18.2)
–	607K04260	ESS PWBA (Never replace both MCU and ESS pwbs at the same time) (W/O TAG 001) (REP 18.2)
6	–	EMMC card (Not Spared)
7	–	ESS housing (Not Spared)
8	–	Not used
9	–	Not used
10	–	LVPS PWBA 110V/220V (P/O PL 18.1A Item 99) (REP 18.8)
11	–	LVPS plate (P/O PL 18.1A Item 99)
12	–	Front interlock switch assembly (Not Spared) (REP 18.14)
13	952K33420	Front USB harness (REP 18.10)
14	–	Interlock switch bracket (Not Spared)
90	–	Wireless adaptor (Not Spared)
91	–	16GB SSD memory (Optional) (Not Spared)
–	121K57970	16GB SSD memory
99	607K03910	LVPS PWBA kit 110V
–	607K03920	LVPS PWBA kit 220V

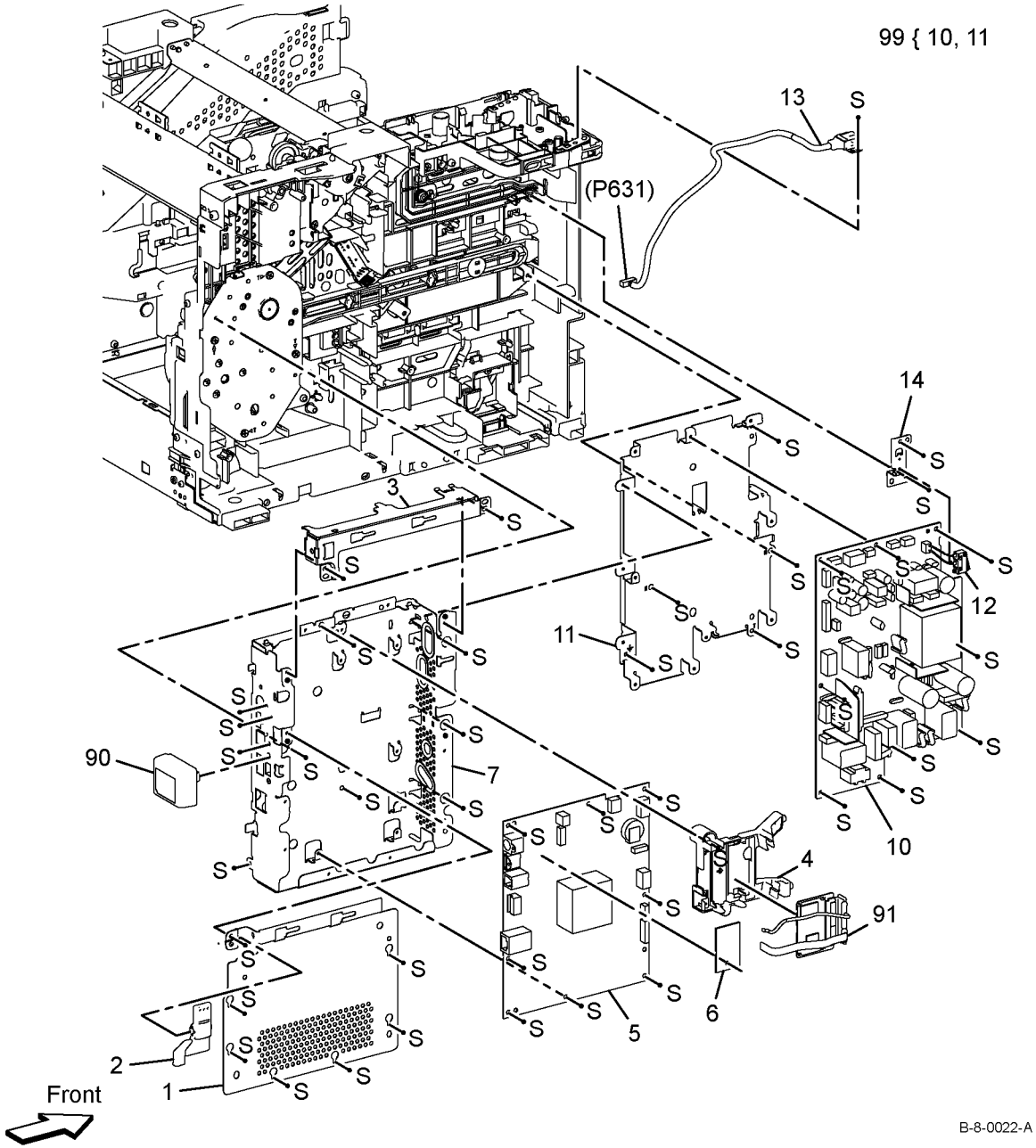

PL 18.1B Electrical (1 of 3) - B405

Item	Part	Description
1	–	ESS lower window plate (Not Spared)
2	–	Wifi release lever (Not Spared)
3	–	ESS top plate (Not Spared)
4	–	HDD bracket (Not Spared)
5	607K11460	ESS PWBA (Never replace both MCU and ESS pwbs at the same time) (W/ TAG 001) (REP 18.1)
–	607K04280	ESS PWBA (Never replace both MCU and ESS pwbs at the same time) (W/O TAG 001) (REP 18.1)
6	–	EMMC card (Not Spared)
7	–	ESS housing (Not Spared)
8	–	Not used
9	–	Not used
10	105K32960	LVPS PWBA 110V (REP 18.7)
–	105K32970	LVPS PWBA 220V
11	–	LVPS plate (Not Spared)
12	–	Not used
13	–	Not used
14	–	Not used
15	960K80762	Fax PWBA
16	–	Fax plate (Not Spared)
17	952K33430	Front USB harness (REP 18.1)
18	–	Not used
19	–	Speaker assembly (Not Spared)
20	–	Speaker cover (Not Spared)
21	–	Fax harness assembly (Not Spared)
22	–	Fax clamp (Not Spared)
23	–	Front interlock switch assembly (P/O PL 18.1B Item 98) (REP 18.3)
24	–	Interlock switch bracket (P/O PL 18.1B Item 98)
90	–	Wireless adaptor (Not Spared)
91	–	16GB SSD memory (Optional) (Not Spared)
–	121K57970	16GB SSD memory
98	604K90560	Front interlock switch assembly

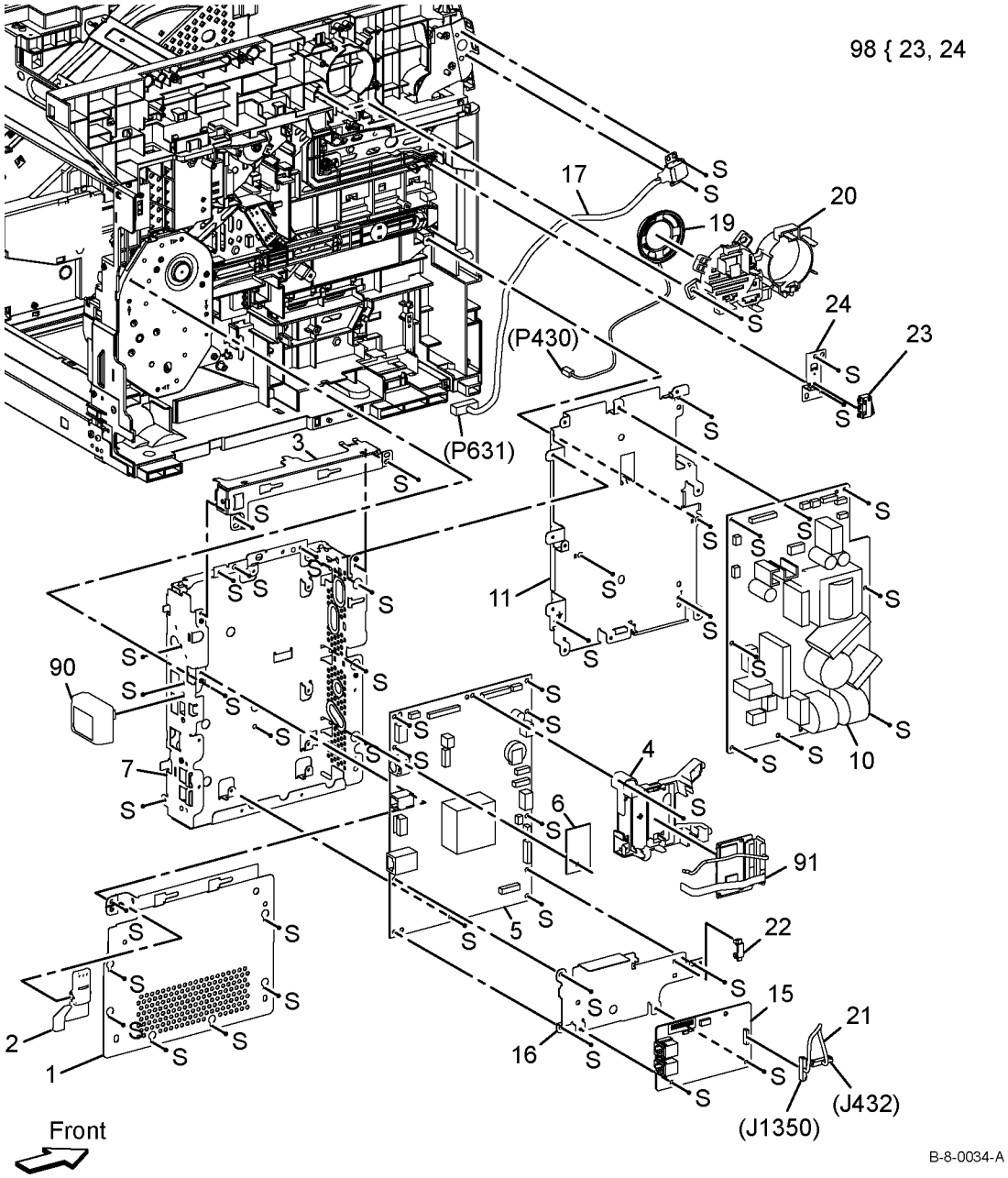

PL 18.2 Electrical (2 of 3)

Item	Part	Description
1	–	MCU cover (Not Spared)
2	960K91315	MCU PWBA B400 (REP 18.4) / B405 (REP 18.3) (Never replace both MCU and ESS pwbs at the same time)
3	–	MCU bracket (Not Spared)
4	–	MCU housing (Not Spared)
5	105K30958	HVPS B400 (REP 18.6) / B405 (REP 18.5)

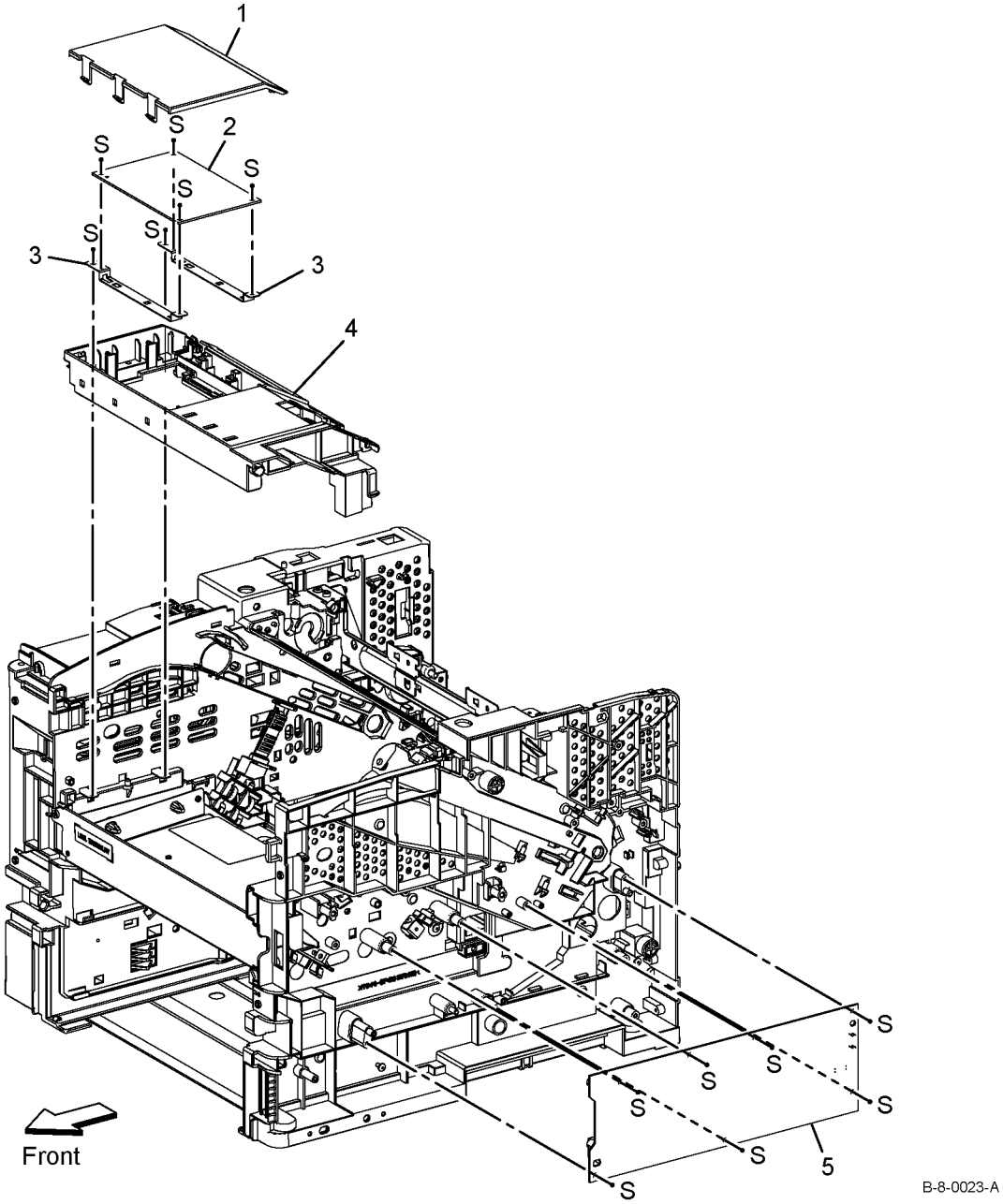

PL 18.3A Electrical (3 of 3) - B400

Item	Part	Description
1	952K13403	Inlet harness assembly 220V (REP 18.12)
–	952K10223	Inlet harness assembly 110V (REP 18.12)
2	–	Switch bracket (Not Spared)
3	–	ESS harness assembly (Not Spared)
4	–	ESS power harness assembly (Not Spared)
5	–	LV harness assembly (Not Spared)
6	–	MCU 24V harness assembly (Not Spared)
7	–	Not used
8	–	Option feeder harness assembly (Not Spared)
9	–	FSR harness assembly (Not Spared)
10	–	Dispenser motor harness assembly (Not Spared)
11	–	Main motor harness assembly (Not Spared)
12	–	Xerographics CRUM harness assembly (Not Spared)
13	–	HV harness assembly (Not Spared)
14	–	Test rely harness assembly (Not Spared)
15	–	Exit sensor harness assembly (Not Spared)
16	–	Rear fan harness assembly (Not Spared)
17	–	Harness assembly (Not Spared)
18	–	Drawer harness assembly (Not Spared)

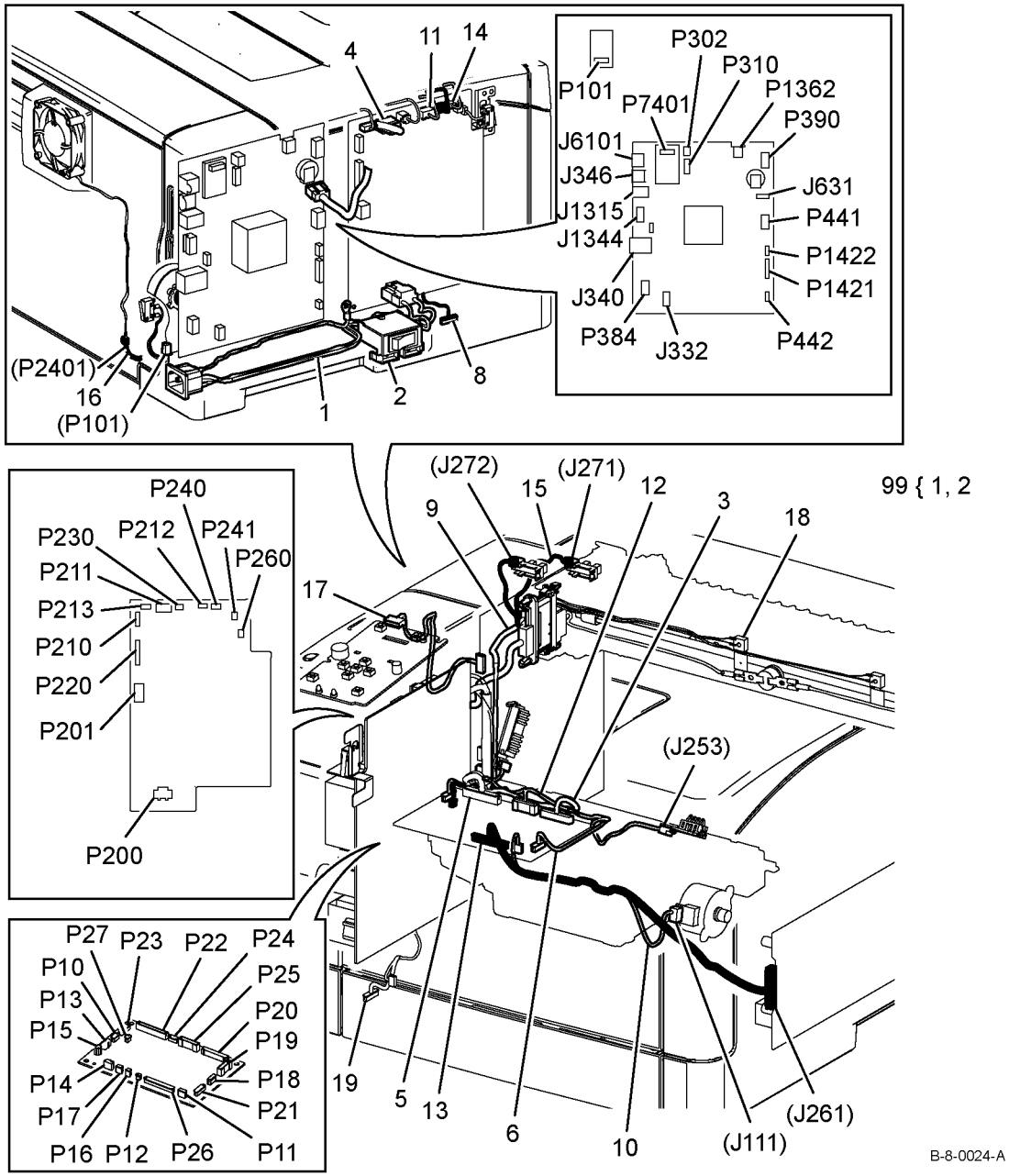

PL 18.3B Electrical (3 of 3) - B405

Item	Part	Description
1	952K33312	Inlet harness assembly 220V (REP 18.11)
–	952K33302	Inlet harness assembly 110V (REP 18.11)
2	–	Switch bracket (Not Spared)
3	–	ESS harness assembly (Not Spared)
4	–	ESS power harness assembly (Not Spared)
5	–	LV harness assembly (Not Spared)
6	–	MCU 24V harness assembly (Not Spared)
7	–	Not used
8	–	Option feeder harness assembly (Not Spared)
9	–	FSR harness assembly (Not Spared)
10	–	Dispenser motor harness assembly (Not Spared)
11	–	Main motor harness assembly (Not Spared)
12	–	Xerographics CRUM harness assembly (Not Spared)
13	–	HV harness assembly (Not Spared)
14	–	Test rely harness assembly (Not Spared)
15	–	Exit sensor harness assembly (Not Spared)
16	–	Rear fan harness assembly (Not Spared)
17	–	Harness assembly (Not Spared)
18	–	Drawer harness assembly 110V/220V (Not Spared)

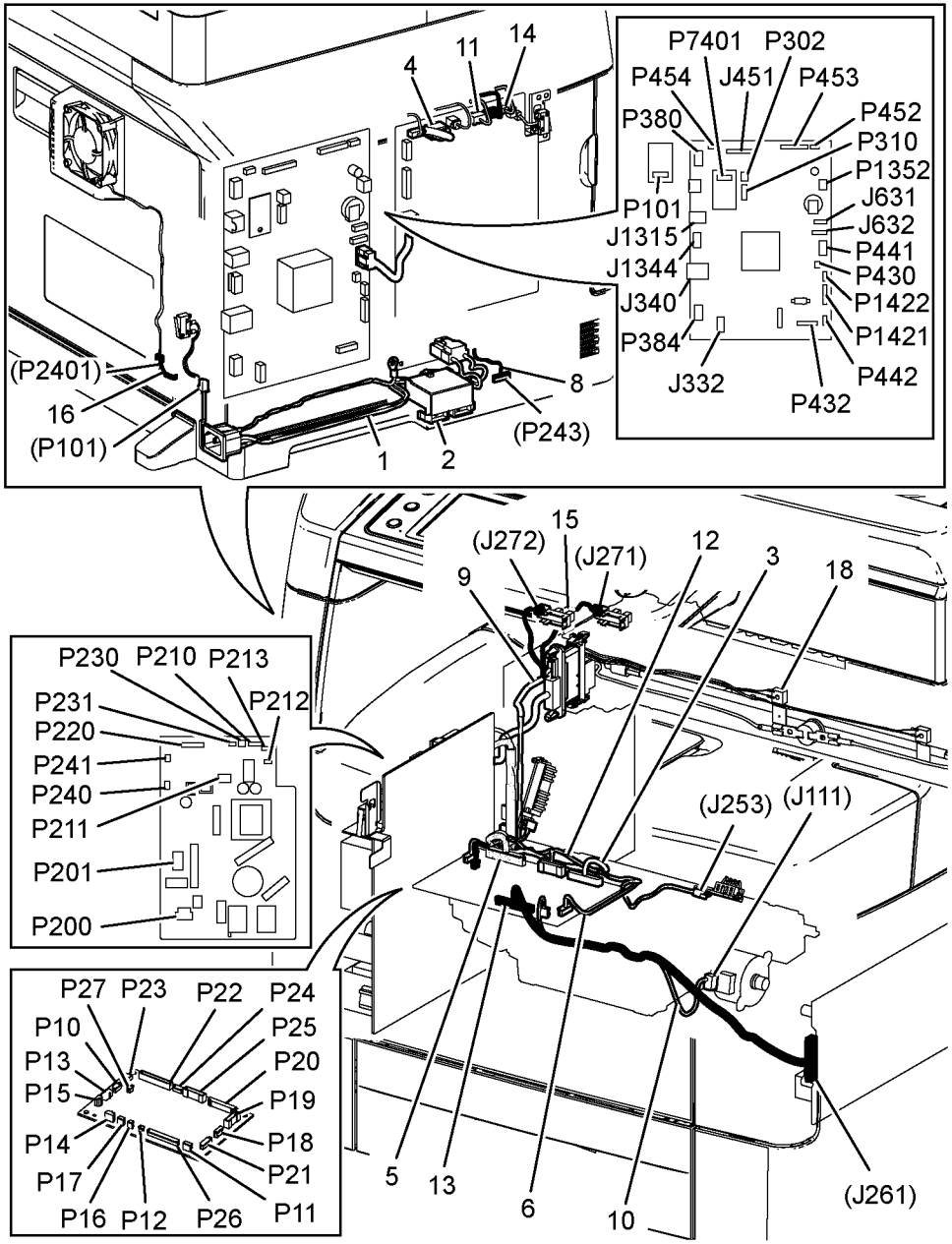

PL 19.1A Cover (1 of 3) - B400

Item	Part	Description
1	–	Top front cover (P/O PL 19.1A Item 98)
2	–	Front cover (P/O PL 19.1A Item 98) (REP 19.2)
3	–	Interlock actuator (P/O PL 19.1A Item 98)
4	–	Interlock spring (P/O PL 19.1A Item 98)
5	–	Interlock holder (P/O PL 19.1A Item 98)
6	–	MSI instruction label (P/O PL 19.1A Item 98)
7	–	Logo - plate assembly (P/O PL 19.1A Item 98)
8	–	Cover extension (P/O PL 19.1A Item 99) (REP 19.6)
9	–	2nd cover extension (P/O PL 19.1A Item 99)
10	948K02680	Top exit cover assembly (REP 19.10)
11	–	Exit top cover (P/O PL 19.1A Item 10)
12	–	Bottom exit cover (P/O PL 19.1A Item 10)
13	848E82654	Right cover (REP 19.8)
98	948K02611	Front cover assembly kit
99	948K02600	Cover extension assembly

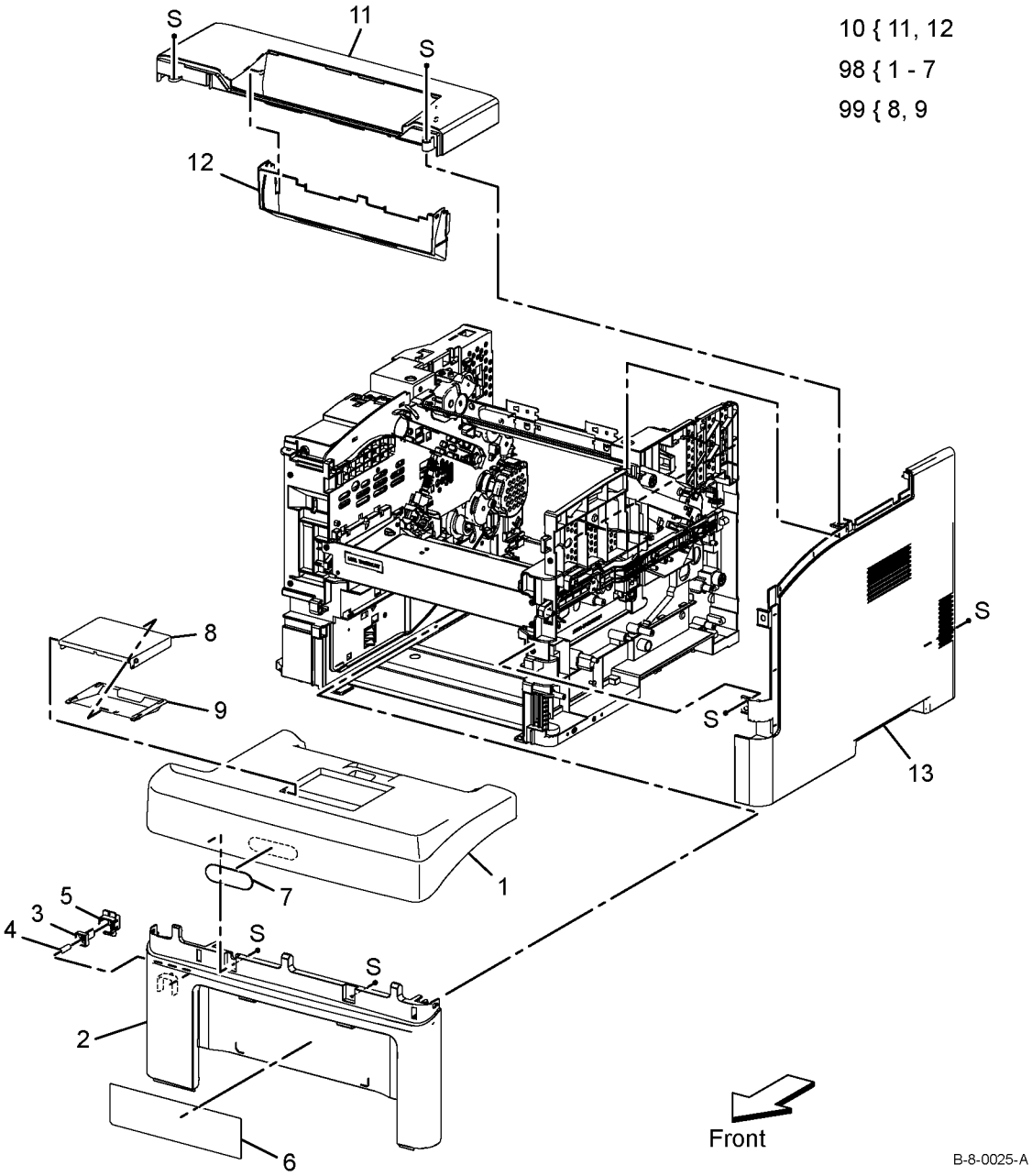

PL 19.1B Cover (1 of 3) - B405

Item	Part	Description
1	–	Front top cover (P/O PL 19.1B Item 98)
2	–	Front cover (P/O PL 19.1B Item 98) (REP 19.1)
3	–	Interlock actuator (P/O PL 19.1B Item 98)
4	–	Interlock spring (P/O PL 19.1B Item 98)
5	–	Interlock holder (P/O PL 19.1B Item 98)
6	–	MSI instruction label (P/O PL 19.1B Item 98)
7	–	XC logo plate assembly (P/O PL 19.1B Item 98)
8	–	Cover extension (P/O PL 19.1B Item 99) (REP 19.5)
9	–	2nd cover extension (P/O PL 19.1B Item 99)
10	948K02670	Exit top cover assembly
11	–	Exit top cover (P/O PL 19.1B Item 10)
12	–	Exit bottom cover (P/O PL 19.1B Item 10)
13	–	Not used
14	–	Not used
15	822E29580	Scanner outer right cover
16	822E29570	Scanner inner right cover
17	848K68342	Right cover assembly (REP 19.7)
98	948K02640	Front cover assembly kit
99	948K02600	Cover extension assembly

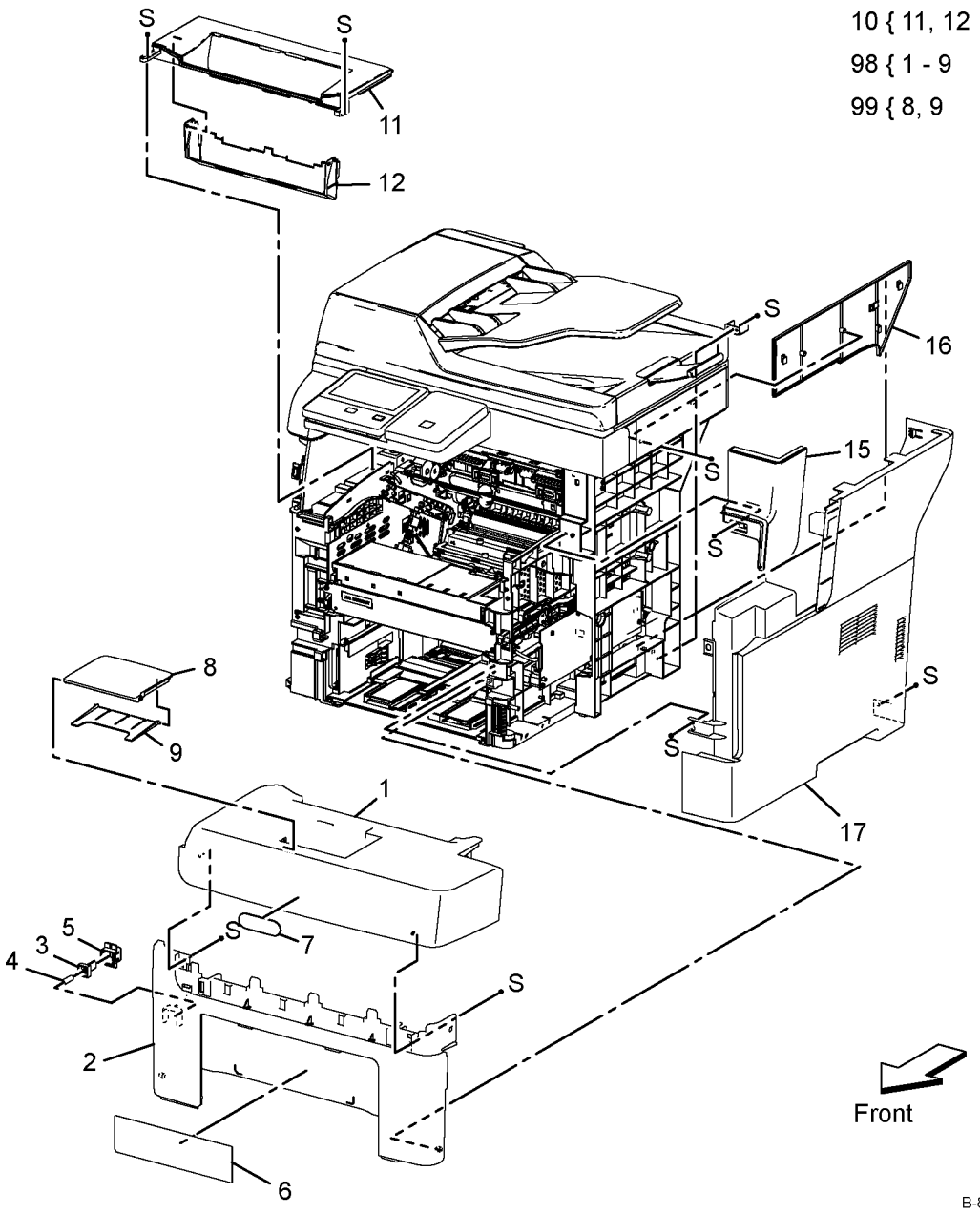

PL 19.2A Cover (2 of 3) - B400

Item	Part	Description
1	822E29340	Wifi cap cover (REP 19.20)
2	822E29390	Left cover (REP 19.12)
3	948K02220	ESS window cover assembly (REP 19.4)
4	–	ESS window cover (P/O PL 19.2A Item 3)
5	–	Knurling screw (P/O PL 19.2A Item 3)
6	–	E-ring (P/O PL 19.2A Item 3)
7	–	Window plate (P/O PL 19.2A Item 3)
8	848E82672	Rear under cover (REP 19.18)
9	–	Not used
10	–	Rear cover assembly (P/O PL 19.2A Item 99) (REP 19.14)
11	–	DTS out earth spring (P/O PL 19.2A Item 99)
12	–	Duplex chute assembly (P/O PL 19.2A Item 99)
99	848K70060	Rear cover assembly

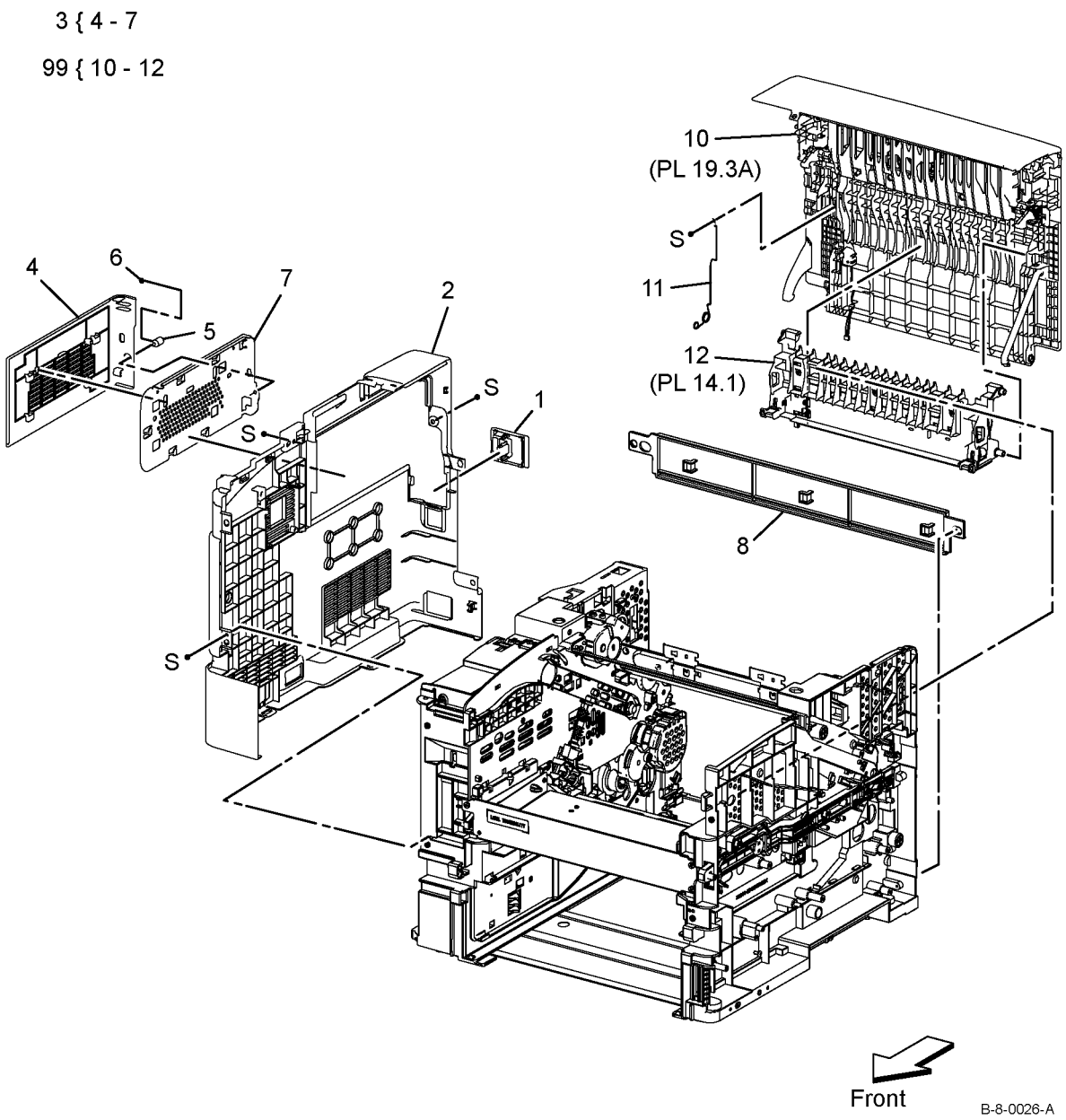

PL 19.2B Cover (2 of 3) - B405

Item	Part	Description
1	822E29340	Wifi cap cover (REP 19.19)
2	848E89214	Scanner left cover
3	822E29521	Left cover (REP 19.11)
4	948K02210	ESS window cover assembly (REP 19.3)
5	–	ESS window cover (P/O PL 19.2B Item 4)
6	–	Knurling screw (P/O PL 19.2B Item 4)
7	–	E-ring (P/O PL 19.2B Item 4)
8	–	Window plate (P/O PL 19.2B Item 4)
9	848E82672	Rear under cover (REP 19.17)
10	–	Rear cover assembly (P/O PL 19.2B Item 99) (REP 19.13)
11	–	DTS out earth spring (P/O PL 19.2B Item 99)
12	–	Duplex chute assembly (P/O PL 19.2B Item 99)
99	948K02690	Rear cover assembly

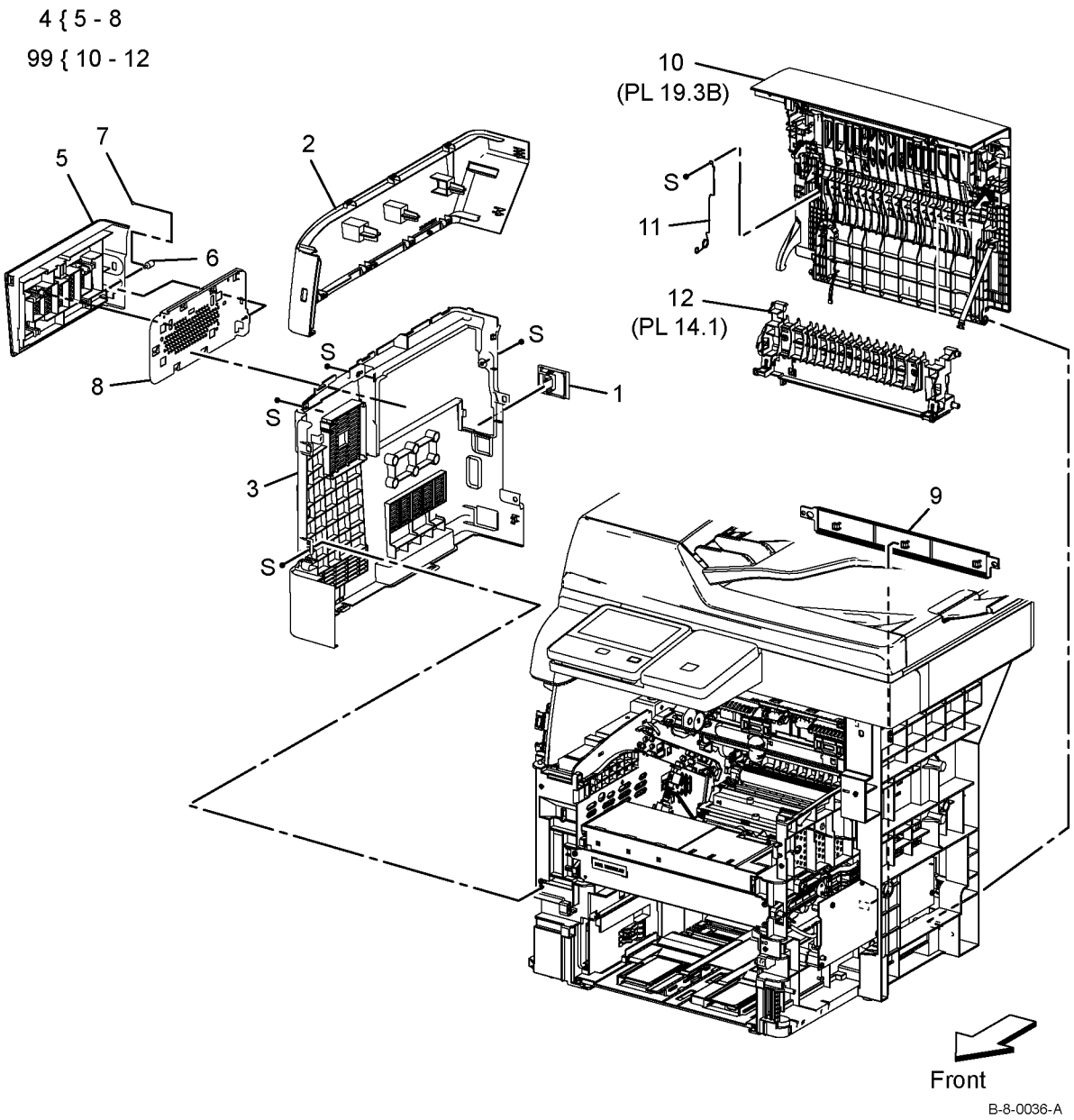

PL 19.3A Cover (3 of 3) - B400

Item	Part	Description
1	–	Rear cover (Not Spared)
2	–	Top rear cover (Not Spared)
3	–	Rear latch cover (Not Spared)
4	–	Rear latch (Not Spared)
5	–	Duplex out chute (Not Spared)
6	–	Rear latch spring (Not Spared)
7	868E76893	Rear strap
8	–	Rear guide harness (Not Spared)
9	127E86632	Rear fan (REP 19.16)
10	–	Screw (Not Spared)

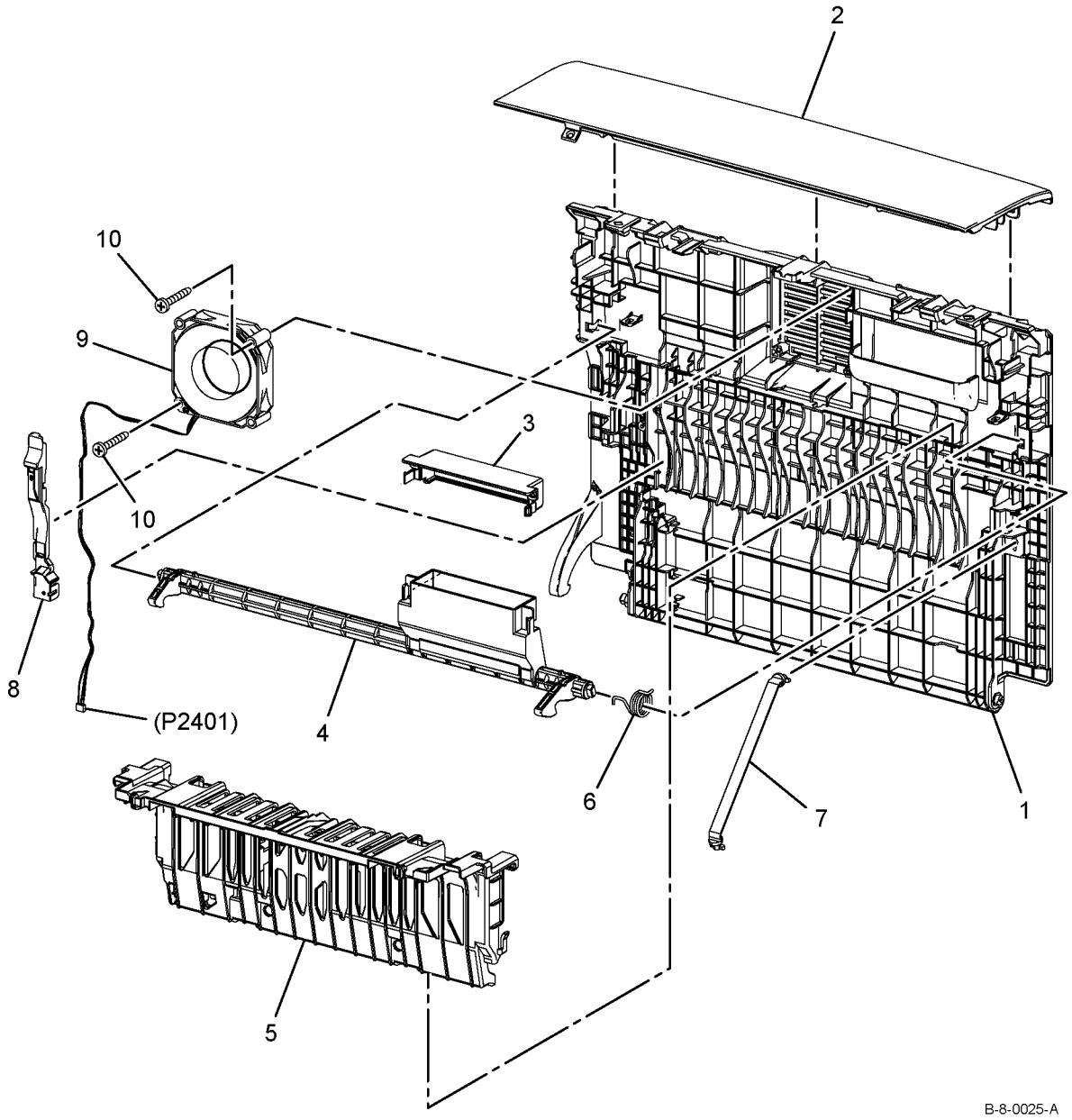

PL 19.3B Cover (3 of 3) - B405

Item	Part	Description
1	–	Rear cover (Not Spared)
2	–	Top rear cover
3	–	Rear latch cover (Not Spared)
4	–	Rear latch (Not Spared)
5	–	Duplex out chute (Not Spared)
6	–	Rear latch spring (Not Spared)
7	868E76893	Rear strap
8	–	Rear guide harness (Not Spared)
9	127E86632	Rear fan (REP 19.15)
10	–	Screw (Not Spared)

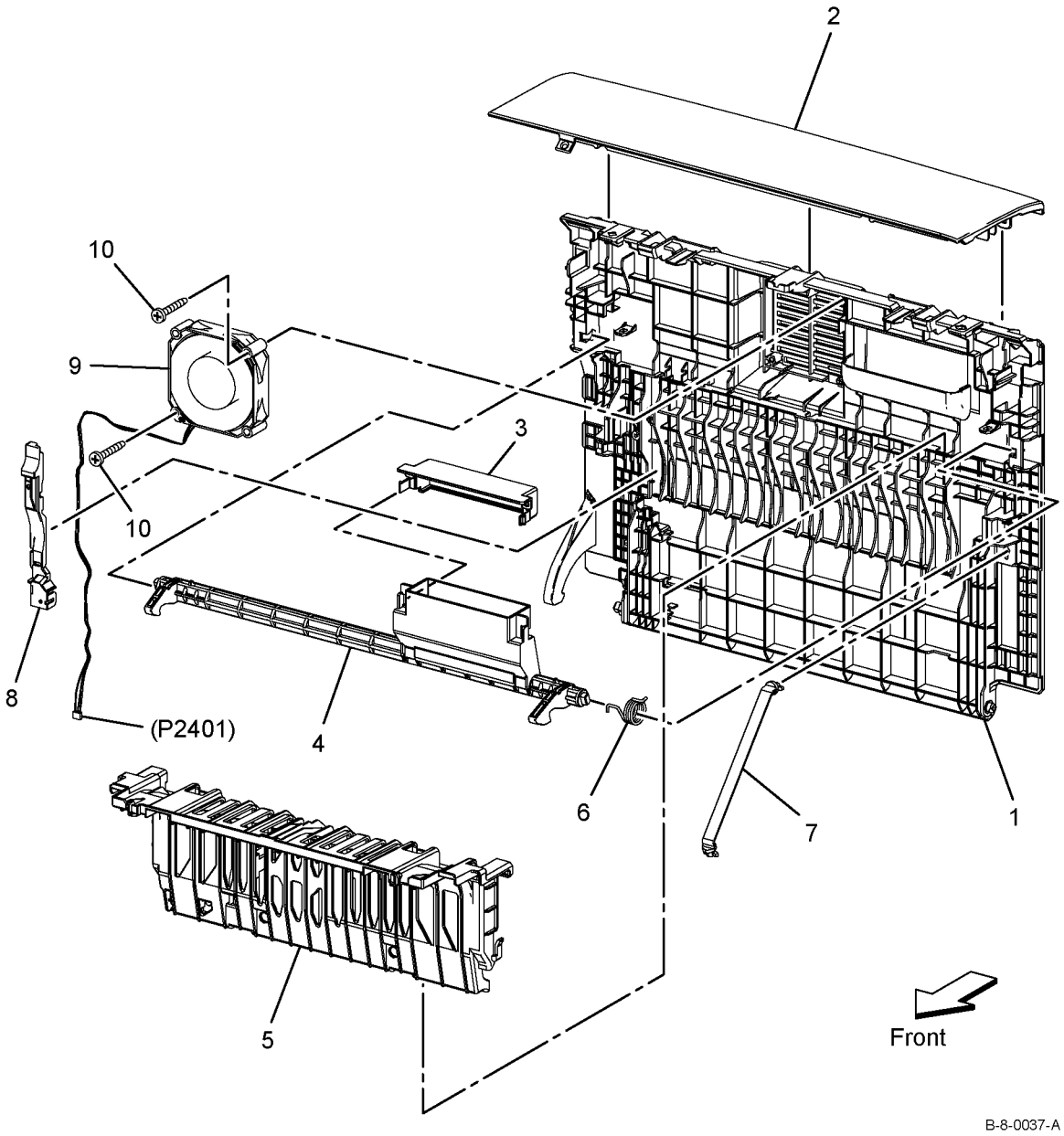

PL 21.1 Scanner

Item	Part	Description
1	059K81533	Scanner assembly (REP 21.1)
2	–	DADF top cover (P/O PL 21.1 Item 96) (REP 21.5)
3	–	DADF roller assembly (P/O PL 21.1 Item 95) (REP 21.4)
4	–	Separation pad (P/O PL 21.1 Item 95) (REP 21.3)
5	–	DADF frame assembly (P/O PL 21.1 Item 1)
7	–	Not used
8	–	Not used
9	003K89860	Right hinge assembly (REP 21.2)
10	003K89140	Left hinge assembly (REP 21.2)
11	050K71060	DADF tray assembly (REP 21.6)
12	–	Not used
13	–	Not used
14	062K25595	IIT Assembly (REP 21.1)
15	–	Not used
16	–	Not used
17	–	Left stopper plate (P/O PL 21.1 Item 96)
18	–	Right stopper plate (P/O PL 21.1 Item 96)
19	–	Idle spring (P/O PL 21.1 Item 96)
20	–	Idle roll assembly (P/O PL 21.1 Item 96)
21	–	Not used
22	–	Sensor (P/O PL 21.1 Item 11)
23	–	Not used
24	–	Not used
25	–	Harness (P/O PL 21.1 Item 11)
26	–	--
27	–	DADF tray (P/O PL 21.1 Item 11)
95	604K85850	DADF pick up module kit (mid)
96	604K85860	DADF top cover assembly (mid) (REP 21.5)
97	–	DADF top cover kit (P/O PL 21.1 Item 1)

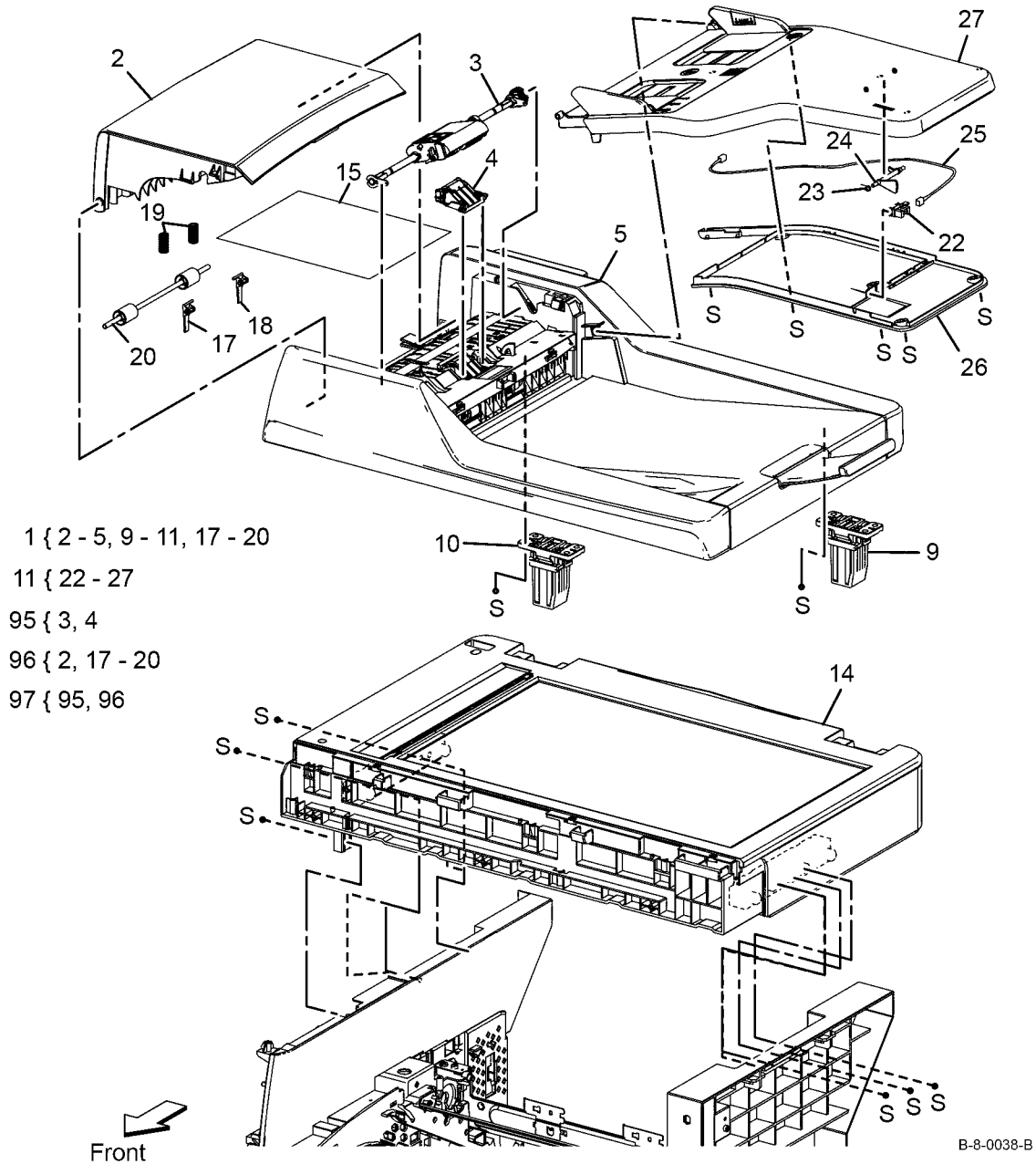

6 General Procedures - Information

GP 1 to GP 9

GP 1 Service Diagnostics Entry and Exit 6-3
GP 2 Fault Codes and History Logs 6-4
GP 3 Device Information 6-5
GP 4 Machine Software 6-5
GP 5 Miscellaneous Checks 6-7
GP 6 How to Check a Motor 6-8
GP 7 How to Check a Sensor 6-10
GP 8 How to Check a Solenoid or Clutch 6-11
GP 9 How to Check a Switch 6-12

GP 10 to GP 19

GP 10 How to Switch the Machine On or Off 6-13
GP 11 How to Safely Lift or Move Heavy Modules 6-13
GP 12 Machine Lubrication 6-14
GP 13 Network Clone Procedure 6-14
GP 14 How to Set the Date and Time 6-16
GP 15 Paper and Media Size Specifications 6-17
GP 16 Installation Space Requirements 6-18
GP 17 Electrical Power Requirements 6-19
GP 18 Environmental Data 6-19
GP 19 Administrator Log In 6-20

GP 20 to GP 28

GP 20 First Print Out/Copy Time and Startup Time 6-21
GP 21 Restriction of Hazardous Substances (RoHS) 6-21
GP 22 Printing Reports 6-22
GP 23 Obtaining Audit and Device Logs 6-22
GP 24 Cleaning the Document Glass and White Strip 6-23
GP 25 Special Boot Modes 6-23
GP 26 Ethernet Crossover Cable Setup 6-24
GP 27 System Administrator Password Reset 6-25
GP 28 Converting from Sold to Metered, or Metered to Sold Toner 6-27

GP 40

GP 40 Glossary of Terms, Acronyms and Abbreviations 6-29

dC118 to dC131

dC118 Jam Counter 6-35
dC120 Failure Counter 6-35
dC122 Shutdown History 6-36
dC125 Faults 6-36
dC131 NVM Read/Write 6-37

dC132 to dC1011

dC132 Machine ID and Billing Data 6-39
dC135 HFSI Counter 6-39
dC140 Analog Component Monitoring 6-40
dC301 NVM Initialization 6-40
dC305 UI Panel Diagnostics 6-41
dC330 Component Control 6-41
dC355 Hard Disk Diagnostics 6-44
dC500 Blank Page Threshold Value 6-44
dC612 Print Test Pattern 6-45
dC945 IIT Calibration 6-46
dC1010 Signals Sending Test 6-47
dC1011 Relay On/Off Test 6-47

Change Tags

Tags/MODs 6-49
ESS Tags 6-49

GP 1 Service Diagnostics Entry and Exit

Purpose

This procedure describes how to enter and exit diagnostics and the available service routines.

NOTE: *When diagnostics is entered, all existing copy jobs are cancelled and an 'Offline' screen message is displayed.*

How to Enter Diagnostics

1. Switch on the machine, GP 10.
2. When the machine is ready, press and hold the Home button for 5 seconds.

   NOTE: *The system administrator can set an extra level of diagnostics password protection* 'Customer Service Engineer Access Restriction'. *Security sensitive customers may have this feature enabled. If this feature is enabled, obtain the maintenance password from the customer.*

3. When the passcode screen opens, enter the passcode, 6789 or the CE maintenance password, then touch OK. If the maintenance password is unavailable, refer to Maintenance Password Not Available. Touch the OK button on the UI.
4. Touch Diagnostics.
5. Select the relevant diagnostics routine:
   - dC118 Jam Counter
   - dC120 Failure Counter
   - dC122 Shutdown History
   - dC125 Faults
   - dC131 NVM Read/Write
   - dC132 Machine ID and Billing Data
   - dC135 HFSI Counter
   - dC140 Analog Component Monitoring
   - dC301 Initialize NVM
   - dC305 Panel Diagnostics
   - dC330 Component Control
   - dC355 Hard Disk Diagnostics
   - dC500 Blank Page Threshold Value
   - dC612 Print Test Pattern
   - dC945 IIT Calibration
   - dC1010 Signals Sending Test
   - dC1011 Relay On/Off Test

How to Exit Diagnostics

1. Touch the Exit button. Select either Clear Error Log History or Keep Error Log History.
2. Touch the Service button.
3. Touch the Log Out button.

Maintenance Password Not Available

If the maintenance passcode is unavailable, perform the steps that follow:

1. From the Embedded Web Server Home screen, select **Log In**, then **Admin**.
2. Enter the password '1111' (default setting). Select **Log In**. If the administrator password is unknown, perform GP 19 System Administrator Password Reset.
3. Select **System**, **Security**.
4. Select **Customer Service Engineer Access Restriction**. If this option is not displayed, select **SSL/TSL Settings**, then enable **HTTP-SSL/TLS Communication**. Then select **OK**, then **Restart Now**. After the restart, select **System**, then **Security**, then **Customer Service Engineer Access Restriction**.
5. Disable the feature, select **OK**, then **Restart Now**.
6. Enter diagnostics normally.

GP 2 Fault Codes and History Logs

Purpose

To describe access to fault history information and explain the fault code structure.

Fault Data Available from Diagnostics

Diagnostics (GP 1) gives access to the fault history options that follow:

- For information on paper jam codes, refer to dC118 Jam Counter.
- For information on failures, refer to dC120 Failure Counter.
- For information on current machine faults, refer to dC125 Faults.

Function, Fault, Component Codes

Refer to Table 1 for a description of some of the function and fault code prefixes.

Table 1 Function and fault code prefixes

Chain Code	Function
002	User interface
003	Network Controller (IITSC)
005	Document transportation (DADF)
010	Paper Handling/Fuser
016	Network controller (Controller)
017	Network controller (Controller)
018	Network controller (Network)
021	Network controller (EP Accessory)
023	Network controller (MF-UI)
024	Network controller (IOTSC)
025	Network controller (HDD/SSD)
026	Network controller (JRM)
027	Network controller (Network)
028	Network controller (IOTSC)
029	Network controller (Network)
03X	Fax
04X	IOT Manager/Drive
05X	IOT (Jam Zone / Fuser)
06X	ROS, IIT
07X (X = tray No.)	Paper Trays and Handling / Interlocks
09X	Xerographics
102	USB
103	Network controller (IITSC)
116	Network controller (Controller)
117	Network controller (Controller)
118	Network controller (Network)
121	Network controller (EP Accessory)
123	Network controller (MF-UI)

Table 1 Function and fault code prefixes

Chain Code	Function
124	Network controller (IOTSC)
127	Network controller (Network)
133	Network controller (Fax)
500	Diagnostics Mode

GP 3 Device Information

Purpose

To provide machine hardware and software information.

Service Information Available

From the Home screen, touch the Device button. This gives the options that follow:

- Language
- About:
  - Device Name
  - Model
  - Serial Number
  - Xerox Asset Tag
  - Customer Asset Tag
  - Software Version
  - Contact information
  - Network information
  - WiFi information
  - Job Overwrite
  - Information Pages
- Notifications
- Paper Trays
- Supplies
- Billing Usage
- Support

GP 4 Machine Software

Purpose

To provide machine software information and explain the software loading procedures.

Obtaining Machine Software

The firmware download manager tool (FWDLMgr.exe) and the device firmware file (.bin) can be downloaded from the Xerox.com, Product Support and Drivers page.

Procedure

Four methods are available to download the machine software:

1. Software Loading via the Special Boot Menu
2. Software Loading via the Embedded Web Server
3. Software Download via the USB Port
4. Software Download via the Network Port (Port 9100)

Software Loading via the Special Boot Menu

1. Download the firmware (.bin) file, refer to Obtaining Machine Software.
2. Create a folder named ‘DWLD’ on the USB memory device.
3. Store the software download file (.bin) in the ‘DWLD’ folder
4. Switch off the machine, GP 10. Insert the USB memory device.
5. Enter SPECIAL BOOT MODE, GP 25. Select Download Mode on SPECIAL BOOT MENU 1/3, then touch **YES**. The UI displays Software Update progress. The machine will eventually reboot.

CAUTION

Do not switch off the printer until the reboot is complete. The printer will reboot after the download is complete.

6. After the reboot, a Software Upgrade Report will print. Remove the USB memory device.

Software Loading via the Embedded Web Server

There are three options available for updating the software via the Embedded Web Page:

- Check Now
- Periodic Updates
- Updates with File Specified

Check Now

Use this feature to check for software updates.

Perform the steps that follow:

1. Log in as an administrator via the Embedded Web Server. Ensure that Software Update is set to **Enable**.
2. Touch **Check Now**.

Periodic Updates

Use this feature setup the device to check periodically (daily, weekly, monthly) for software updates.

Perform the steps that follow:

1. Log in as an administrator via the Embedded Web Server. Ensure that Software Update is set to **Enable**.
2. Under the Check Automatically banner, use the menu to set “When should the Device check for updates?” to Never, Daily, Weekly, or Monthly.

Updates with File Specified

Perform the steps that follow:

1. Download the firmware (.bin) file, refer to Obtaining Machine Software.
2. Log in as an administrator via the Embedded Web Server. Ensure that software Update is set to **Enable**.
3. Under the Update with File Specified banner, touch **Select**.
4. Browse to where the firmware file (.bin) is located. Select the (.bin) file, then touch **Install Now**.

Software Download via the USB Port

Perform the steps that follow:

1. Download the appropriate firmware download manager tool (FWDLMgr.exe) and firmware (.bin) to an appropriate file location on the PWS. Refer to Obtaining Machine Software.
2. Connect a USB type A/B cable from the PWS to the machine.
3. Double click on FWDLMgr.exe to run the firmware download manager tool.
4. Touch **Agree** on the Firmware Update Tool (License).
5. The Printer Model And File Selection window opens. From the pull down menu, select the printer model, then browse to where the firmware file (.bin) is located. Double-click the (.bin) file then select **Add**, then select **Next**.
6. The Communication Interface Selection window opens. Select **USB Port**, then select **Next**.
7. The software update status appears on the Update in Progress screen.

CAUTION

Do not switch off the machine until the reboot is complete. The machine will reboot after the download is complete.

8. When the update is complete, the Result window opens. Touch **complete**. The machine reboots, and a Software Upgrade Report is printed.

Software Download via the Network Port (Port 9100)

Perform the steps that follow:

1. Download the appropriate firmware download manager tool (FWDLMgr.exe) and firmware (.bin) to an appropriate file location on the PWS. Refer to Obtaining Machine Software.
2. Switch off the machine, GP 10.
3. Disconnect the ethernet cable from the machine. Connect an ethernet crossover cable from the PWS network port to the machine network port. Refer to GP 26 Ethernet Cross-over Cable Setup.
4. Switch on the machine, GP 10. When the machine reaches the Ready state, print a Configuration Report, GP 22.
5. PING the IP address in the Configuration Report from the PWS:
   a. Open a command window. Select **Start** and in the Search box, type CMD, then press **Enter**.

      NOTE: *If the Windows key is enabled, this is the key located in the lower left corner of the keyboard and has the Microsoft logo on it. Hold the Windows key down, press R and release both keys to open the Run dialogue, type CMD, then press* ***Enter*** *to open a Command window.*

   b. In the Command Window, after the blinking cursor, type the command PING. Press the space bar once, type the IP address from the Configuration Report, then press **Enter**.
   c. If the ping command is successful, the device replies four times. This should not take two or three seconds.
   d. If the ping command times out, or responds with ‘host unreachable’, check the IP address that was entered. If the IP address is correct, advise the customer to contact Escalated Software Support.
6. Log in as an administrator via the Embedded Web Server. Ensure that Software Update is set to **Enable**.
7. Double click on FWDLMgr.exe to run the firmware download manager tool.
8. Touch **Agree** on the Firmware Update Tool (License).
9. The Printer Model And File Selection window opens. From the pull down menu, select the printer model, then browse to where the firmware file (.bin) is located. Double-click the (.bin) file then touch **Add** and then touch **Next**.
10. The Communication Interface Selection window opens. Select **Network (Port9100)**, then touch **Next**.
11. The Printer Specification window opens. Enter the IP address of the target printer to be updated. Touch **Next** to start the software download.
12. The software update status appears on the Update in Progress screen.

CAUTION

Do not switch off the machine until the reboot is complete. The machine will reboot after the download is complete.

13. When the update is complete, the Result window opens. Touch **complete**. The machine will reboot, and a Software Upgrade Report is printed.

GP 5 Miscellaneous Checks

Purpose

To indicate which types of problems to look for when checking or inspecting parts of the machine.

Procedure

1. Assess the fault. Check if the part is broken, too loose or too tight. Check if it needs cleaning or lubricating.
2. Check the components that follow as appropriate:
   - Actuators
   - Bearings
   - Drive Belts
   - Gears
   - Gravity Fingers and Stripper Fingers
   - Harnesses and Wiring
   - Rollers
   - Shafts

Actuators

- Free movement.
- Damage
- Contamination.

Bearings

- Wear.
- Damage.
- Contamination.

Drive Belts

- Wear.
- Damaged teeth.
- Correct tension.
- Contamination of tension rollers and support shafts.

Gears

- Contamination.
- Chips or cracks.
- Wear.
- Misalignment.

Gravity Fingers and Stripper Fingers

- Free movement.
- Missing fingers.
- Damage.
- Contamination on the fingers, rollers or on the pivot shaft.

Harnesses and Wiring

- Continuity.
- Short circuits caused by physical damage or contamination of conductors, terminals or connectors.
- Overheated insulation.
- Damaged insulation near moving parts and sharp edges.
- Pin and receptacle damage on connectors.

Rollers

- Flats.
- Tears.
- Contamination.
- Secure E-clips and other retainers.

Shafts

- Contamination.
- Misalignment.
- Rotates without binding.

GP 6 How to Check a Motor

This procedure describes how to check the motors that follow:

- Two Wire DC Motors.
- Four Wire Stepper Motor.
- Six Wire Stepper Motor.

Initial Actions

WARNING

Ensure that the electricity to the machine is switched off while performing tasks that do not need electricity. Refer to GP 10. Disconnect the power cord. Electricity can cause death or injury. Moving parts can cause injury.

1. Check that the motor is free to rotate.
2. Check that all the motor's mechanisms are clean, free to move and lubricated correctly.
3. Enter the component control code for the motor. Refer to dC330. Run the motor for 30 seconds. If the motor shows signs of, or can be heard to slow down, then the motor is defective. Replace the motor.
4. Perform the appropriate procedure:
   - Two Wire DC Motors.
   - Four Wire Stepper Motor.
   - Six Wire Stepper Motor.

   NOTE: *The voltages, PJ numbers, pin numbers and PWB names shown are an example only.*

Two Wire DC Motors

NOTE: *In cases where the motor may be driven forward or backward, the same 2 feed wires are used, but the voltages on them are reversed, to reverse the motor direction. Such motors may have 2 component control codes, for forward and reverse. A typical application is a tray lift motor with a tray-up and a tray-down direction.*

- Disconnect PJB (Flag 2). Check that +24V is measured when the component control code for the motor is entered.
- Disconnect PJA (Flag 1). Check for +24V on the LVPS.
- Disconnect PJC (Flag 3). Check that the signal changes on the ESS PWB when the component control code for the motor is entered.
- Check the wiring and the connectors for the motor circuit.

Four Wire Stepper Motor

NOTE: *A stepper motor with an internal open circuit may appear to be fully functional under dC330 component control. However, under normal operation it will run with intermittent failure. Use the standard digital meter to check that the resistance of the stepper motor coils are similar.*

- Disconnect PJH (Flag 6). Check the motor on pulses on the harness when the component control code for the motor is entered.
- Disconnect PJJ (Flag 6). Check the motor on pulses on the harness when the component control code for the motor is entered.
- Check the wiring and the connectors for the motor circuit.

Six Wire Stepper Motor

NOTE: *A stepper motor with an internal open circuit may appear to be fully functional under dC330 component control. However, under normal operation it will run with intermittent failure. Use the standard digital meter to check that the resistance of the stepper motor coils are similar.*

- Disconnect PJF (Flag 5). Check the +24V supply and the motor on pulses when the component control code for the motor is entered.
- Disconnect PJD (Flag 4). Check the +24V, +5V and 0V supplies.
- Check the clock pulses (Flag 4).
- Check that the signal on PJD pin 13 (Flag 4) changes when the component control code for the motor is entered.
- Check the wiring and the connectors for the motor circuit.

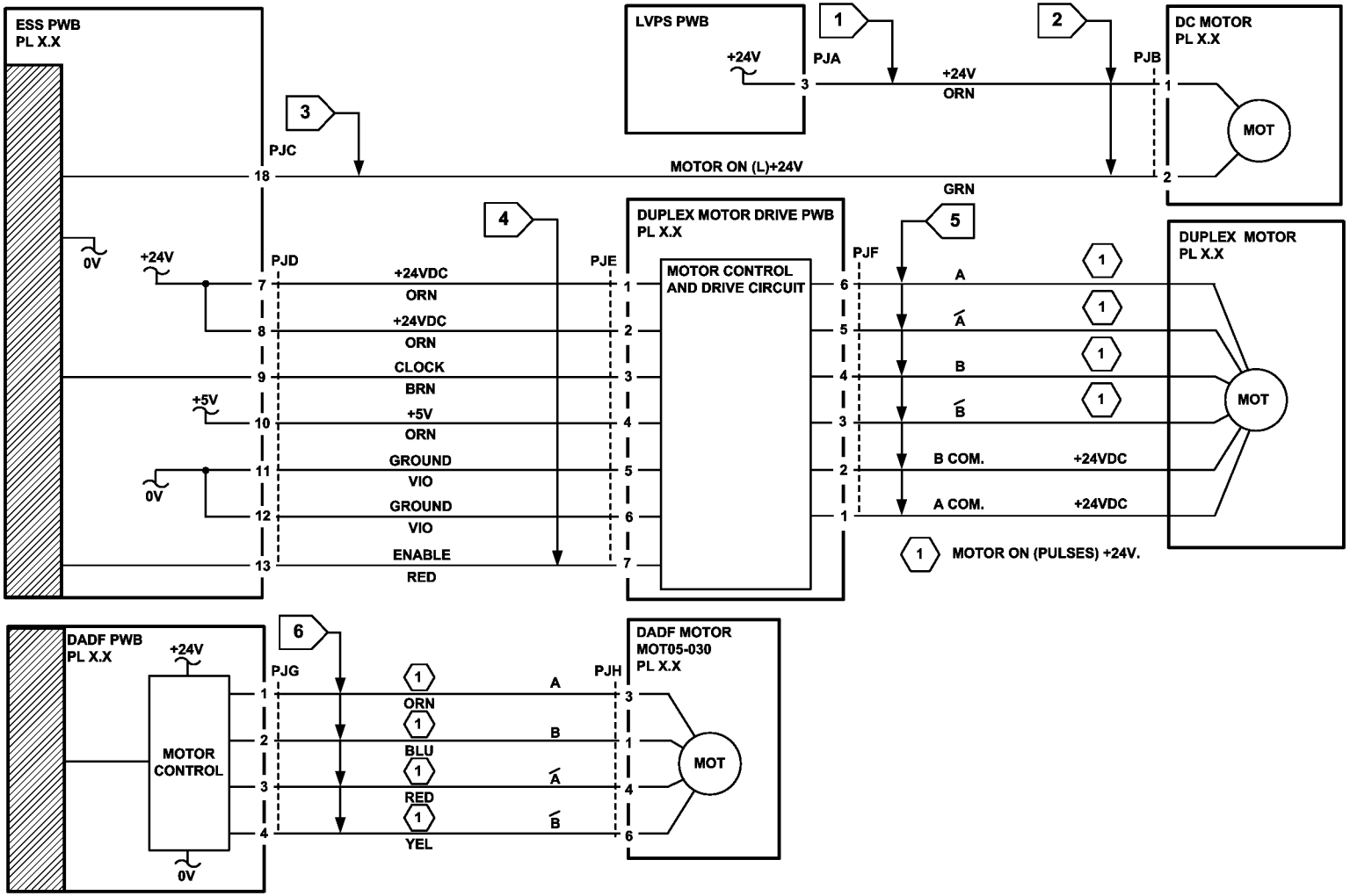

Figure 1 Wiring diagram

GP 7 How to Check a Sensor

Description

Use this procedure to check the operation of a sensor.

NOTE: *The upper circuit diagram in Figure 1 shows a flag sensor. Some sensors have a resistor within the sensor. Other sensors require a resistor on the PWB, such as R1 in Figure 1. The resistor limits the current through the LED. This decreases the voltage on the sensor LED to 1.2V, typically.*

NOTE: *The voltages, PJ numbers, pin numbers and PWB names shown are an example only.*

Initial Actions

WARNING

Ensure that the electricity to the machine is switched off while performing tasks that do not need electricity. Refer to GP 10. Disconnect the power cord. Electricity can cause death or injury. Moving parts can cause injury.

Perform the steps that follow:

1. Ensure that the sensor is installed correctly.
2. Clean the sensor and the area around the sensor.
3. If a flag actuator is installed, check that it has free movement.
4. Check that the paper path is clear.
5. If the sensor activates by a surface that reflects, check that the surface is clean. Also ensure that there is not an obstruction between the sensor and the surface.
6. If the sensor actuates by an encoder disc, ensure the holes or gaps in the disc are aligned correctly with the sensor.

Sensor Action

In the upper sensor in Figure 1, when light from the LED is allowed to fall on the photo-sensitive transistor, the sensing line, PJA, pin 2, is low. When light from the LED is blocked by the flag, the sensing line is high.

In the lower sensor in Figure 1, when light from the LED is reflected by the paper onto the photo-sensitive transistor, the sensing line, PJE, pin 2 is low. When no paper is present, no light falls on the transistor and the sensing line is high.

Quick Sensor Check

Enter the component control code for the sensor. Refer to dC330. Activate the sensor. If the display changes, the sensor operates correctly. If the display does not change, perform the procedure.

Procedure

For the upper sensor in Figure 1:

- Disconnect PJA (Flag 1). Check for +3.3V and 0V at PJA on the harness.
- Disconnect PJC (Flag 2). Check the wiring and the connectors for the sensor circuit.
- Check for +3.3V and 0V at PJC (Flag 2) on the ESS PWB.
- If necessary, install new components or repair the wiring.

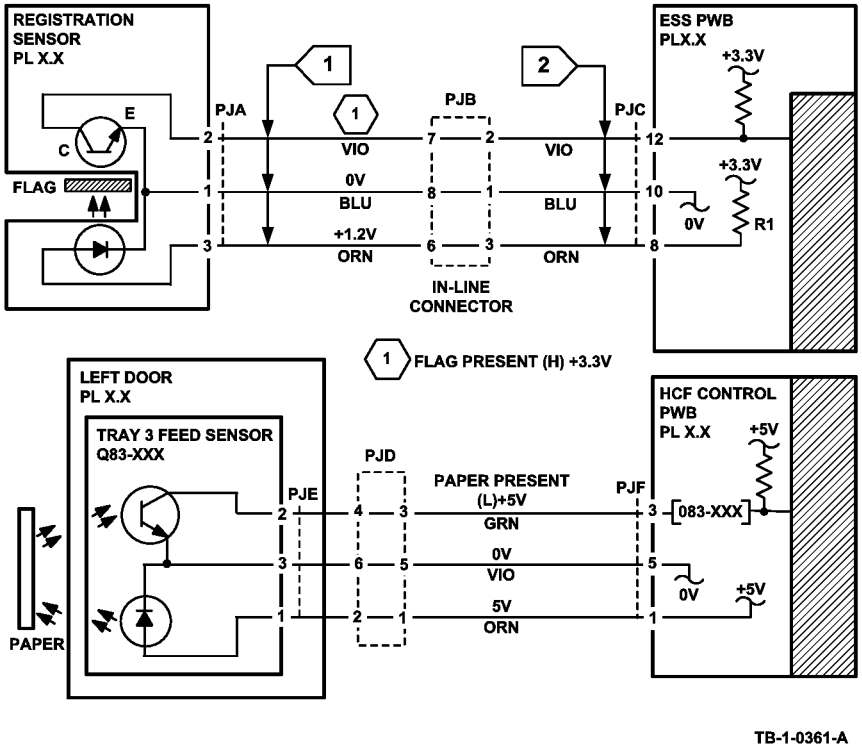

Figure 1 Wiring diagram

GP 8 How to Check a Solenoid or Clutch

Description

Use this procedure to check a clutch or solenoid.

Initial Actions

WARNING

Ensure that the electricity to the machine is switched off while performing tasks that do not need electricity. Refer to GP 10. Disconnect the power cord. Electricity can cause death or injury. Moving parts can cause injury.

1. For a clutch, check that the mechanical components are clean, free to move and are lubricated correctly
2. For a solenoid, check that the armature and associated mechanical components are free to move.

Procedure

NOTE: *The voltages, PJ numbers, pin numbers and PWB names shown are an example only.*

NOTE: *When a solenoid is energized in diagnostics, armature movement is seen. When a clutch is energized in diagnostics, the sound of the clutch action is heard. If possible, energize the motor connected to the clutch to confirm when the clutch is energized.*

- Check that the signal changes on the ESS PWB (Flag 1) when the component control code for the clutch or solenoid is entered.
- Disconnect PJC (Flag 2). Check that +24V is measured when the component control code for the clutch or solenoid is entered.
- Disconnect PJD (Flag 3). Check for +24V on the LVPS.
- Check the wiring and the connectors for the clutch or solenoid circuit.

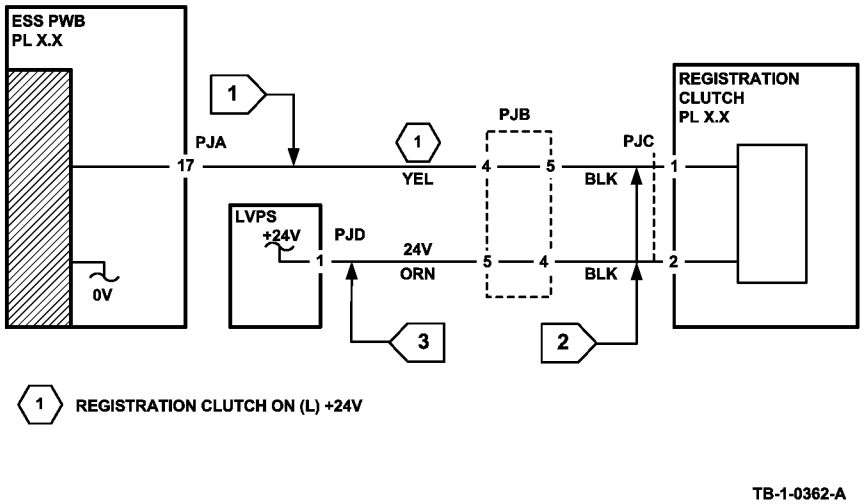

Figure 1 Wiring diagram

GP 9 How to Check a Switch

Description

Use this procedure to check the operation of a switch.

NOTE: *The circuit in Figure 1 shows an interlock switch activated by the closing of a door.*

Initial Actions

WARNING

Ensure that the electricity to the machine is switched off while performing tasks that do not need electricity. Refer to GP 10. Disconnect the power cord. Electricity can cause death or injury. Moving parts can cause injury.

Manually check that the switch operates. Ensure that the magnet or other actuator has enough mechanical movement to operate the switch.

NOTE: *The voltages, PJ numbers, pin numbers and PWB names shown are an example only.*

Procedure

- Disconnect PJA (Flag 1). Check the electrical operation of the switch.
- Disconnect PJB (Flag 1). Check for +5V and 0V on the IOT PWB.
- Check the wiring and the connectors for the switch circuit.

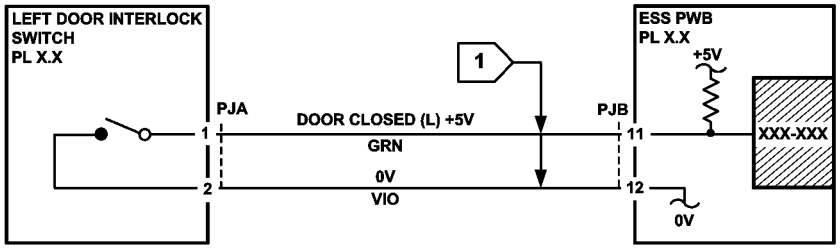

TB-1-0363-A

Figure 1 Wiring diagram

GP 10 How to Switch the Machine On or Off

Purpose

To show how to switch off or switch on the machine without the loss of customer data or damage to the system hardware.

WARNING

Do not use the power button as a safety disconnect device. The power button is not a disconnect device. Disconnect the power cord from the supply to isolate the equipment.

Refer to:

- Switch On Procedure
- Switch Off Procedure
- Restart
- Sleep Mode

Switch On Procedure

1. After the machine has been switched off, wait a minimum of 2 minutes before the machine is switched on.
2. After a service call, ensure that all service tools are removed from the machine.
3. Connect the power lead from the power supply outlet to the machine.
4. For B400 only, switch on the main power switch.
5. Press the Power button on the UI.
6. The machine will perform a power on self test (POST). The POST checks that the hardware resources are available to run the operating system. If a POST fault is detected, the machine is prevented from booting. The fault is communicated via a LEDs on the ESS PWB. Refer to the OF 2 POST Error Rap.

Switch Off Procedure

CAUTION

Do not disconnect the power cord or interrupt the electricity supply before the power down is complete unless advised. The data and software can become damaged.

1. Press the Power button on the UI. The Power Down Options window will display.
2. Touch the Power Off button.
3. For B400, switch off the main power switch.
4. When the machine has switched off, remove the power lead from the outlet.

Restart

Restart is selected from the Power Down Options window. When pressed, the machine should restart within 2 minutes.

Sleep Mode

Sleep is selected from the Power Down Options window. When pressed, the machine should immediately enter sleep mode.

GP 11 How to Safely Lift or Move Heavy Modules

Purpose

Use this procedure when lifting or moving heavy modules.

Procedure

When removing heavy modules from the machine, the instructions that follow must be observed:

1. Ensure that a suitable stable surface to support the module after removal is located in close proximity to the machine.

   NOTE: *Other parts of the machine are not a suitable stable surface.*

2. Ensure that the height of the support surface is between 750mm and 1000mm (30 inches and 39 inches).
3. Ensure that there are no hazards or obstacles between the machine and the support surface.
4. If instructed to remove the module toward the rear of the machine and only 1 person is available, the module must be removed while standing at the rear of the machine. If 2 people are available, the module may be removed while standing at the front of the machine.
5. Two people are required if the module is to be lifted on to the floor or lifted from the floor.

GP 12 Machine Lubrication

Purpose

To give information on the use of lubricants.

Procedure

WARNING

Ensure that the electricity to the machine is switched off while performing tasks that do not need electricity. Refer to GP 10. Disconnect the power cord. Electricity can cause death or injury. Moving parts can cause injury.

CAUTION

Only use lubricants as directed. Incorrect use of lubricants could seriously affect the performance of the machine.

Take the precautions that follow when performing machine lubrication:

- Wear disposable gloves.
- Only use lubricants that are specified in the Parts List.
- Only lubricate parts of the machine as directed in the relevant RAPs, Repairs, Adjustments and General Procedures.
- Apply only the smallest amount of lubricant, sufficient to lubricate the parts. To prevent contamination, remove any surplus lubricant before the machine is run.
- Take great care not to contaminate other parts of the machine with the lubricant.

GP 13 Network Clone Procedure

Purpose

Use this procedure to establish a network connection between the PWS and printer, create a copy of network configuration settings and then distribute these settings to multiple devices on the network. This cloning process can also be used to backup and restore network settings lost during a software reload.

NOTE: *To establish a direct Ethernet connection between the PWS and printer requires the printer's driver installation CD-ROM, a crossover cable, and the PWS.*

Depending on the printer, a Windows 7 (W7) driver might not be available on the printer's driver installation CD-ROM. If not, download the driver from Xerox.com under the Support and Drivers page. W7 has two kernal types, 32 and 64-bit. If installation the wrong driver is attempted, Windows displays an error to indicate the driver is incorrect. To check the kernal type, click on Start, in the right column, right click on Computer and select Properties, the kernal type will be listed as System Type.

Procedure

Refer to the relevant procedure:

- Establishing a LAN connection
- Creating the Clone File
- Using the Clone File
- Set a Static IP Address on the PWS
- PWS Browser Proxy Server Setting

Establishing a LAN connection

Use these steps to establish a Local Area Network (LAN) connection between the PWS and printer using a crossover cable.

NOTE: *Record the original data for every change. It may be necessary to reset the IP address, depending on PWS usage and local network practice.*

1. Print a Configuration Report, GP 14. Note the printer's IP address.
2. Connect the crossover cable between the PWS and printer.
3. Open a Command window (CMD) on the PWS.
   - If running XP, click on **Start**, then select **Run**. Type **CMD** in the Run dialog box and press **Enter**.
   - If running W7, select **Start** and in the Search box above the Start button, type **CMD** and press **Enter**.

   NOTE: *If the Windows key is enabled (the key located in the lower left corner with the Microsoft logo), hold the Windows key down, press R and release both keys to open the Run dialog box.*

4. Type **ipconfig** at the prompt, record the current network settings displayed. Restore these settings when the LAN connection is no longer needed.

   NOTE: *Use the IPv4 address for the Local Area Connection, not the address listed under Wireless Ethernet Connection (if enabled in the laptop).*

5. Check the IP addresses of the PWS and printer. If the PWS has been connected to the same subnet, the PWS and printer address should share the same values for the first three and have a different value for the forth number. Refer to Table 1 for an example.

Table 1 Example LAN settings

	Printer	PWS / Laptop
IP Address	192.168.0.2	192.168.0.5
Subnet Mask	255.255.255.0	255.255.255.0
Gateway/Router	192.168.0.1	192.168.0.1

If the PWS and printer share similar, but unique IP address, continue. If not, use the Set a Static IP Address on the PWS to set the PWS IP address.

6. After verifying the IP addresses are correctly configured, PING the printer:
   a. In the Command window (where the blinking cursor is) type the word **PING**. Press the space bar once and enter the printer's IP address and press **Enter**. As an example: ping 192.168.0.2.
   b. If the printer responds to the PING command, it replies four times. This should not take more than two or three seconds.
   c. If the PING command times out, or responds with "host unreachable", check the IP addresses that were entered. If the IP address is correct, advise the customer to contact Escalated Software Support.
7. If the PING command replies, exit the Command window (type "exit" at the prompt and press **Enter**). This test verifies the Ethernet connection is good.
8. Install the printer driver and setup the printer as a local printer. Select connect to the printer using "other" port type. From the dialog drop down select Standard TCP/IP port.
9. For the printer name or IP address, enter the printer's IP address (192.168.0.2 in this example).
10. When the driver installation finishes, Select **Yes** at the Print Test Print dialog box.

    NOTE: *If the test page does not print, the customer could have Accounting enabled (if the device supports it) requiring that a special code is submitted with the print job before the printer prints.*

11. After the test print is completed, open a web browser on the PWS.
12. In the Address Bar (in place of a web site address or URL), enter the printer's IP address (192.168.0.2 in this example).
13. If the connection is working correctly, the web page of the printer will be displayed.

    NOTE: *If the printer's webpage cannot be opened, verify that Web Services are enabled on the configuration page. If the web browser is set to use a Proxy address for the internet connection, it will not be possible to open the printer's webpage as there will be no connection to that proxy server while directly connected to the printer via the crossover Ethernet cable. Refer to PWS Browser Proxy Server Setting for instructions on Internet Explorer proxy configuration.*

Creating the Clone File

NOTE: *This procedure can be performed from any PC connected to the network or the PWS connected to the machine using an Ethernet crossover cable. The only requirement on the PC is an Internet Browser.*

1. Open Internet Explorer
2. Enter the machine's IP address in the **Address** line and select **Go**.
3. When the **Internet Services** window opens, login to **Admin** mode, GP 23. Click on the **Home** tab, then the **Cloning** link.
4. Select individual parameters to clone from the device or Select/Clear All.
5. Click on Create.
6. If prompted, save the clone file to an easily remembered location that for later installation. If not prompted to save the file, look for it in the Downloads folder.
7. Click Close.
8. Log out of **Admin** mode, GP 19.

Using the Clone File

NOTE: *This procedure can be performed from any PC connected to the network or the PWS connected to the machine using an Ethernet crossover cable. The only requirement on the PC is an Internet Browser.*

1. Open Internet Explorer
2. Enter the machine's IP address in the **Address** line and select **Go**.
3. When the **Internet Services** window opens, login to **Admin**, GP 23. Click on the **Home** tab, then the **Cloning** link.
4. Click on the **Select** button.
5. Use the **Browse** button to navigate to the clone file, or type the full path to the file, then click **Open**.
6. Click **Install**.
7. Verify the cloned settings with a new Configuration Report.

Set a Static IP Address on the PWS

Use this procedure to manually set the PWS IP address. Instructions are given for W7 and XP.

NOTE: *If the PWS has a wireless Ethernet card/adapter installed, Windows will not use the wired Ethernet port by default until either the PWS is rebooted or the wireless Ethernet card is temporarily disabled. If unsure how to disable/enable the wireless Ethernet card, restart the PWS after setting the IP address.*

For W7:

1. Open the **Control Panel**.
2. Select **Network Sharing Center**.
3. Select **Change Adaptor Settings** in the upper left corner of the Control Panel.
4. Right-click on **Local Area Connection**, then select **Properties**.
5. On the Networking tab (for local area connection), click on **Internet Protocol Version 4** (TCP/IPv4), then select **Properties**.
6. Select **Use the following IP address** and enter an IP address similar to the printer to manually set the PWS IP address and subnet mask to match the printer's IP configuration settings.

7. Click **OK** twice and exit Network Connections and return to Creating the Clone File.

For XP:

1. Click **Start** and select **Control Panel**.
2. Click **Network and Internet Connections** and then select **Network Connections**.
3. Right-click on **Local Area Connection** and then select **Properties**.
4. On the General tab (for local area connection), click I**nternet Protocol (TCP/IP)**, and then click on **Properties**.
5. Click **Use the following IP address** to manually set the computer's IP address and sub-net mask to match the printer's IP configuration.
6. Click **OK** twice to exit Network Connections and return to Creating the Clone File.

PWS Browser Proxy Server Setting

The following steps ensure the proxy server settings are correct.

1. Open **Windows Internet Explorer.**
2. Select **Tools - Internet Options**.
3. Select the **Advanced** tab.
4. Scroll down to **HTTP 1.1 Settings**.
5. Ensure that the "Use HTTP 1.1 through proxy connections" box is **un-checked**.
6. Select **OK** to close the **Internet Options** window.
7. Close **Windows Internet Explore**r.

GP 14 How to Set the Date and Time

Purpose

To set the machine's date and time.

Procedure

Perform the steps that follow:

1. Enter Customer Administration Mode, GP 19.
2. Touch the Device button.
3. Touch General.
4. Touch **Date and Time**.
5. Set the correct Time Zone, Date and Time, and date and time display settings, then select OK.
6. Log out of Customer Administration Mode, GP 19.

GP 15 Paper and Media Size Specifications

Purpose

To list the paper and media size specifications.

Specifications

NOTE: *Check that the paper tray settings match the paper size in the tray.*

Refer to Table 1 for supported paper size and weight for the standard tray, the 550 sheet option feeder(s) and the MSI tray.

Table 1 Supported paper size and weight

Tray	Supported Paper (Standard Size)	Supported Paper (Non-Standard Size) (W x L)	Supported Paper Weight	Capacity	Remarks
Standard tray	Min: A6SEF Max: Legal 8.5x14 inches SEF	Min: 76.2x127mm (3x5 inches) Max: 215.9 x 355.6mm (8.5x14 inches)	60 to 220gsm (16 to 80lbs)	550 (60gsm/16lbs)	Stack height 54mm (2.1 inches)
550 sheet option feeder	Min: A5SEF Max: Legal 8.5x14 inches SEF	Min: 139.7x210mm (A5 to 8.5 inches) Max: 215.9 x 355.6mm (A5 to 14 inches)	60 to 220gsm (16 to 80lbs)	550 (60gsm/16lbs)	Stack height 54mm (2.1 inches)
MSI	Min: Postcard, Envelope Max: Legal 8.5x14 inches SEF	Min: 76.2x127mm (3x5 inches) Max: 215.9x355.6mm (8.5x14 inches)	60 to 220gsm (16 to 80lbs)	150 (60gsm/16lbs)	Stack height 15mm (0.6 inch)

GP 16 Installation Space Requirements

Purpose

To outline the general space requirements to enable safe use and adequate access for service.

WARNING

Do not work in a confined space. 1 m (39 inches) space is needed for safe working.

WARNING

USA and Canada. Do not install this machine in a hallway or exit route that does not have 1.12 m (44 inches) of space additional to the normal space requirements in front of the machine. To conform with fire regulations this additional 1.12 m (44 inches) of space is needed in front of the machine in hallway and exit routes.

Machine Height

Refer to Table 1.

Table 1 Machine Height Specifications

Configuration	Height (mm)	Height (Inches)
MFP with standard paper try only	551	21.69
MFP with 3 550 sheet option feeders	971	38.2
SFP with standard paper tray only	458	18
SFP with 3 550 sheet option feeders	740	29.1

Machine Weight

Refer to Table 2.

Table 2 Machine Weight Specifications

Configuration	Weight (kg)	Weight (lbs)
MFP with standard paper try only	22	48.5
MFP with 3 550 sheet option feeders	32.5	71.7
SFP with standard paper tray only	13.5	29.8
SFP with 3 550 sheet option feeders	23.1	50.9

Machine Dimensions and Installation Space Requirements

Table 3 shows the dimensions of the MFP and SPF machines and the installation space required for safe operation.

NOTE: *The installation dimensions in Table 3 allow for a 400 mm (15.8 inches) minimum safe work space around the machine. To ensure this minimum safe work space, it may be necessary to move the machine within the area specified.*

A gap of 100mm (4 inches) is required at the rear for airflow to fans. This is also sufficient for the DADF when raised.

The installation dimensions in Table 3 show the machine footprint with the MSI and output trays fully extended.

Figure 1 represents a plan view of a machine installation and is to be read in conjunction with Table 3. The dimensions A and B outline a footprint of the machine within the boundary of safe operation, dimensions C and D. The dimension E indicates the area required for airflow/work space at the rear of the machine.

Table 3 Dimensions and space requirements

Configuration	Machine Width (MSI closed) (A) mm/ inches	Machine Depth (B) mm/ inches	Install Width Required (C) mm/ inches	Install Depth (D) mm/ inches	Rear Airflow Space (E) mm/ inches
MFP	495 / 19.5	495 / 19.5	1495 / 58.9	995 / 39.2	400 / 15.7
SFP	459 / 18.1	426 / 16.8	1426 / 56.1	959 / 37.8	400 / 15.7

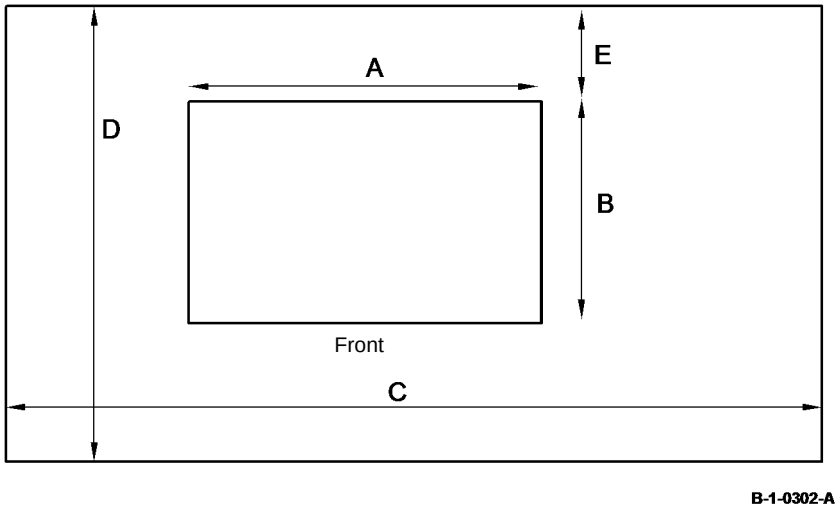

Figure 1 Installation plan

GP 17 Electrical Power Requirements

Power Requirements

Refer to Table 1.

Table 1 Electrical power requirements

Nominal Voltage	Average Current	Comments
110-127VAC (60Hz) Plus 10% minus 10%	Less than or equal to 11A RMS.	50/60Hz plus 3Hz minus 3Hz
220-240VAC (50Hz) Plus 10% minus 10%	Less than or equal to 6A RMS.	50Hz plus 3Hz minus 3Hz

Power Consumption

Refer to Table 2.

Table 2 Power consumption

Model	Power Consumption Value (kW)
MFP	1.08 or less
SFP	1.03 or less

Operation Modes

Refer to Table 3 and Table 4.

Table 3 Operation modes

Mode	State
Run	Normal operation mode
Ready	The state prior to entering run mode.
Low power	A lower power consumption mode than ready mode
Sleep	A lower power consumption mode than low power mode.

Table 4 IOT states

Sub-System	Run Mode	Ready Mode	Low Power Mode	Sleep Mode
Fuser	Maintaining operating temperature	Maintaining standby temperature	Maintaining low temperature	Off
Xerographics	Operating state	Off	Off	Off
Print Head Assembly	Operating state	Off	Off	Off
Fusing Fan	Operating State	Operating State (half-speed)	Off	Off
ESS (Reference only)	Operating state	Operating State	Operating State	Off

GP 18 Environmental Data

Operating

- Temperature range: 0 to 35 degrees C (32 to 95 degrees F).
- Relative humidity: 10 to 85%.
- Altitude: 0 to 3000 metres (0 to 10170 feet).
- Noise:

  NOTE: *Blue Angel Europe criteria measured in accordance with RAL-UZ 122.*

  – Table 1 contains the maximum value in decibels of noise that can be generated by the basic machine.

  – Table 2 contains the maximum value in decibels of noise that can be generated by the machine in other configurations.

Table 1 Maximum noise limits, basic machine

PPM	Standby (dBA)	Run Continuous (dBA)	Run Impulse (dBA)
45	35	56	59
55	35	56	61

Table 2 Maximum noise limits, all configurations

PPM	Standby (dBA)	Run continuous (dBA)	Run Impulse (dBA)
45	35	59	63
55	35	59	63

Storage

- Altitude: 0 to 3000metres (0 to 10170 feet).
- Maximum temperature 40 degrees C (104 degrees F).
- Minimum temperature -20 degrees C (-4 degrees F).

GP 19 Administrator Log In

Purpose

To enable access to administrator features on the UI and web interface.

How to Enter Customer Administration Mode at the UI

Perform the steps that follow:

1. Switch on the machine, GP 10.
2. When the machine is ready, touch **Log In** in the top-left corner of the UI.
3. Touch **Admin**.
4. The Password screen appears. Enter the password **1111** (default setting).

   NOTE: *If the password is not **1111**, ask the customer for the current password. If the customer does not know the password, go to Administrator Password Reset.*

5. Touch **OK**.

Call Closeout

Perform the steps that follow:

1. Touch **Admin** in the top-left corner of the UI.
2. Touch **Logout**.

How to Enter Customer Administration Mode via the Webpage

Perform the steps that follow:

1. Type the device IP address into a Web browser.
2. Select **Log in**, top-left corner.
3. The User Accounts screen appears. Select **Admin**.
4. The admin screen appears. Enter the password **1111** (default setting).
5. Select **Log In**.

Call Closeout

Perform the steps that follow:

1. Select **Admin**, in the top-left corner.
2. The pull down menu appears. Select **Log Out**.

Administrator Password Reset

To reset the admin password, go to GP 27.

GP 20 First Print Out/Copy Time and Startup Time

Purpose

First Print Output Time (FPOT) is defined as the time from when the print engine receives a start signal in low power/sleep mode, until a single page is printed and delivered to the output tray, Table 1.

First Copy Output Time (FCOT) is defined as the time from the touch of the Start button until the complete exit of the first copy, Table 1.

Table 1 First print/copy output time

Color Mode	FPOT (Low Power/Sleep Mode)	FCOT (from platen)	FCOT (from DADF)
B/W	6.5 sec. max.	8.5 sec. max.	9.6 sec. max.

Startup time is the time required for the device to reach ready-state after the machine is switched on or woken from low power or sleep mode, Table 2.

Table 2 Power up time

From mains switch on	From low power mode	From sleep mode
79 sec. max.	19.9 sec. max.	19.9 sec. max.

GP 21 Restriction of Hazardous Substances (RoHS)

Purpose

To give information on the RoHS Directive.

The RoHS Directive restricts the use of certain hazardous substances in electrical and electronic equipment. It applies to equipment placed in the European Union (EU) market. The directive takes effect from 1st July 2006.

NOTE: *Currently these restrictions are only for the European Union (EU) market and some associated countries. For more information go to www.Xerox.com. However, Xerox has mandated that* ***all Xerox® VersaLink® B400 and B4****05 machines must be maintained as RoHS compliant.*

The hazardous substances are:

- Lead (Pb)
- Mercury (Hg)
- Cadmium (Cd)
- Hexavalent Chromium (Cr 6+, Cr [VI])
- Polybrominated Diphenyl Ethers (PBDE's)
- Polybrominated Biphenyls (PBB's)

Identification of a RoHS Compliant Machine

Xerox will maintain a central list of RoHS compliant machines.

All Xerox® VersaLink® B400 and B405 machines are RoHS compliant at time of manufacture.

Procedure

CAUTION

Failure to comply with RoHS guidelines can result in product recalls, imprisonment, fines or penalties.

Use only spares that are listed in the Xerox® VersaLink® B400 and B405 Spare Parts List. Do not use spare parts from other similar machines, even if the parts look identical. All Xerox® VersaLink® B400 and B405 machines are RoHS compliant at time of manufacture and must be maintained as RoHS compliant.

GP 22 Printing Reports

Purpose

To list reports available from the control panel, refer to GP 3.

- Configuration Report
- Billing Summary Report
- Supplies Usage Report
- PostScript Font List
- PCL Font List
- Demonstration Print
- Startup Page

Configuration Report

The Configuration Report lists the current state of system configuration parameters including installed options and network settings.

Billing Summary Report

The Billing Summary Report lists Device Information, Billing Meter impression counters (for customers on billing meter supplies plans only) and Sheet Count by Paper Type.

Supplies Usage

The Supplies Usage report includes the current status of printer consumables and routine maintenance items. Installation dates and replacement part numbers are listed.

PostScript Font List

This report provides a list of the installed PostScript fonts.

PCL Font List

This report provides a list of the installed PCL fonts.

Demonstration Print

This report shows a brief synopsis of the device.

Startup Page

This report lists device type, software versions, enabled protocols and mobile connectivity.

Procedure

Reports are printed from the Control Panel

NOTE: *It is not necessary to enter SA mode (log in) in order to perform this procedure.*

- From the Home Screen touch Device.
- Touch About.
- Scroll to the bottom of the list, then touch Information Pages
- Select the desired report, then touch Print.

GP 23 Obtaining Audit and Device Logs

Purpose

To obtain device logs for analysis by 2nd level support.

NOTE: *It may not be possible to obtain audit and device logs if the device executed a reboot after an error occurred. To enable the device log collection enter dC131, then set the NVM value 700-530 value to 0. Once logs are obtained, enter dC131 and set NVM value 700-530 to 1.*

Procedure

Audit Log

To obtain the Audit Log:

1. Obtain the machine's IP address by printing a configuration report, GP 22.
2. Access the web UI by entering the IP address into a web browser on a PC on the same network as the machine.
3. Log in to the web UI as an administrator, GP 19.
4. **Ensure HTTP- SSL/TLS is enabled:**
   a. Click **Connectivity**.
   b. Click **HTTP**.
   c. Enable HTTP (SSL). You will be prompted to restart the machine, click **Restart Now**.
   d. Click **OK**. You will be prompted to restart the machine, click **Restart Now**.
5. When the machine restarts, log back in as an administrator, then click **System**.
6. Click **Logs**.
7. Click **Audit Log**.
8. Click **Enable**.
9. Click **Export**. The auditlog.txt file is downloaded via the web browser.

Device Log

To obtain the Device Log:

1. Obtain the machine's IP address by printing a configuration report, GP 22.
2. Access the web UI by entering the IP address into a web browser on a PC on the same network as the machine.
3. Log in to the web UI as an administrator, GP 19.
4. Click **System**.
5. Click **Logs**.
6. Click **Device Log**.
7. Click **Accept**. The devicelog.dat file is downloaded via the web browser.

GP 24 Cleaning the Document Glass and White Strip

Purpose

To clean the document glass and white strip while addressing IIT faults.

General Precautions

CAUTION

- *When cleaning the printer do not use organic or strong chemical solvents or aerosol cleaners. Do not pour fluids directly into any area. Use supplies and cleaning materials only as directed in this documentation.*
- *Do not place anything on top of the printer.*
- *Do not leave the covers and doors open for any length of time, especially in well-lit places. Light exposure can damage the imaging units.*
- *Do not open covers and doors during printing.*
- *Do not tilt the printer while it is in use.*
- *Do not touch the electrical contacts or gears. Doing so could damage the printer and cause the print quality to deteriorate.*
- *Ensure any parts removed during cleaning are replaced before you plug subnet in the printer.*

Cleaning Process

WARNING

Ensure that the electricity to the machine is switched off while performing tasks that do not need electricity. Refer to GP 10. Disconnect the power cord. Electricity can cause death or injury. Moving parts can cause injury.

CAUTION

Do not spray detergent directly on the printer. Liquid detergent could enter the printer through a gap and cause problems. Never use cleaning agents other than water or mild detergent.

1. Slightly dampen a soft lint-free cloth or paper towel with water.
2. Open the document cover.
3. Wipe the surface of the document glass and white strip, and then wipe with a dry cloth or paper towel until they are completely dry.
4. Pull the tab to open the DADF chute cover, and hold it open.
5. Wipe the surface of the white strip, and dry with a dry cloth or paper towel.
6. Carefully close the DADF chute cover.
7. Close the document cover.

GP 25 Special Boot Modes

Purpose

To start up the device in various modes to enable special functions, Table 1.

Procedure

1. Switch off the machine, GP 10.
2. Simultaneously press then hold down the **Home** and **Power** buttons until the device powers on and SPECIAL BOOT MENU appears, Figure 1.
3. Simultaneously touch the letters **A** in **SPECIAL, B** in **BOOT** and the **Home** button. Do not hold any of the three locations, just touch and then release simultaneously, Figure 1.

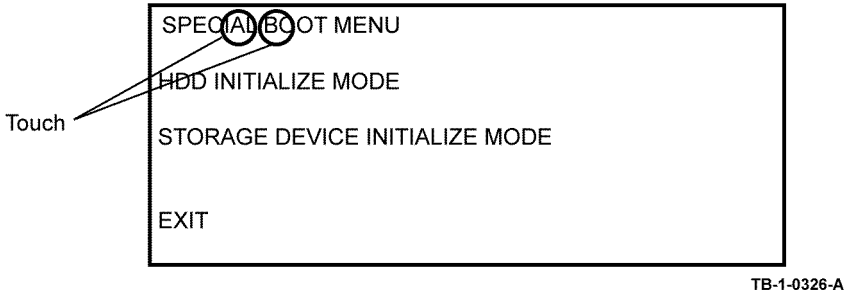

Figure 1 Accessing special boot mode

4. At the keypad screen, enter code: 6789#. The SPECIAL BOOT MENU 1/3 screen will display.

CAUTION

Do not turn off the device until the reboot is complete. The device will reboot after the download is complete.

5. Scroll through SPECIAL BOOT MENU screens 1/3, 2/3 and 3/3 to select the appropriate function, refer to Table 1, then follow the instructions that appear on screen. The device will restart then print a report.

Table 1 First Level Menu

Function	Display	Description
DOWNLOAD MODE	--BOOT MODE-- DOWNLOAD MODE ARE YOU SURE? YES NO	Starts up in Firmware Download Mode. See GP 4.
LONGDIAG MODE	--BOOT MODE-- LONGDIAG MODE ARE YOU SURE? YES NO	Performs a more detailed check as the machine starts up as compared to the usual device diagnostic items.

Table 1 First Level Menu

Function	Display	Description
01. JOB LOG CLEAR MODE	--BOOT MODE-- 01. JOB LOG CLEAR MODE ARE YOU SURE? YES NO	Used when the log data has an error and a Fail such as 116-331 has occurred, or when the log data must be cleared for version upgrade that involves a large change in versions.
02. FACTORY INIT MODE	--BOOT MODE-- 02. FACTORY INIT MODE ARE YOU SURE? YES NO	Used when recovery is not achieved with Startup by “03. NVRAM INIT MODE”. This method can also be used to resolve the problem where the internal clock becomes unstable, therefore causing all the functions that use the clock to become unstable when the ESS PWB is initialized with the backup battery detached. When an initialization is performed with this method, the same billing mismatch, etc. occurs as after replacing the ESS PWB. Note: When performing this boot mode on a device after replacing the IIT, perform a parameter setup for the IIT again according to the instruction sheet included with the replacement IIT.
03. NVRAM INIT MODE	-BOOT MODE-- 03. NVRAM INIT MODE ARE YOU SURE? YES NO	Initializes the NVM of the configuration range (Printer Settings etc) inside the Controller by force and starts up.
04. HDD FORMAT MODE	-BOOT MODE-- 04. HDD FORMAT MODE ARE YOU SURE? YES NO	Formats the EMMC card by force. This operation forcibly sets the EMMC card partition condition to the setting used at shipment.
06. HDD INITIALIZE MODE	--BOOT MODE-- 06. HDD INITIALIZE MODE ARE YOU SURE? YES NO	Initializes the Spool Area (EMMC card). Initialization is performed for the predetermined area of EMMC card partition, and the area other than this area is not influenced.
SKIP INSTALL WIZARD	--BOOT MODE-- SKIP INSTALL WIZARD ARE YOU SURE? YES NO	The function started without displaying INSTALL WIZARD.

GP 26 Ethernet Crossover Cable Setup

Purpose

To connect and then configure a laptop to communicate with a device via a ethernet crossover cable, tool number 600T02252.

Procedure

WARNING

Switch off the electricity to the machine GP 10. Disconnect the power cord from the customer supply while performing tasks that do not need electricity. Electricity can cause death or injury. Moving parts can cause injury.

1. Print a configuration report, GP 22.
2. Ensure that Windows firewall and wireless network connectivity on the laptop are turned off.
3. Record the IP address and subnet Mask of your laptop.

   CAUTION

   Before you change the value of a setting ensure the original value is recorded. All the original values will need to be restored to the laptop at the end of the procedure.

   a. Open a command window on the laptop. Select **Start**, then in the Search box, type CMD, then press **Enter**.

   b. Type **ipconfig** at the command prompt, then make a note of your Local Area Connection: IPv4 Address and subnet Mask.
4. Configure the LAN connection of the laptop to enable communication with the device. Perform the relevant procedure:
   - Windows 7.
   - Windows 10.

Windows 7

Perform the steps that follow:

1. Select the Windows **Start** button, then **Control Panel**, then **Network and Sharing Centre**.
2. From the left pane, select **Change adapter settings**.
3. Right-click on the **Local Area Connection icon**. Select **Properties**. The Local Area Connection Properties window will open.
4. Select **Internet Protocol Version 4 (TCP/IPv4)**. Select **Properties**. The Internet Protocol Version 4 (TCP/IPv4) Properties window will open.
5. Double-click the entry I**nternet Protocol Version 4 (TCP/IPv4)**.
6. Select **Use the following IP address**, then enter the IP address and subnet mask.

   Refer to the configuration report then:
   - Set the IP address of the laptop one number higher than the device. For example, if the IP address of the device is 192.168.196.112, set the IP address of the laptop to 192.168.196.113.
   - Set the subnet mask of the laptop to the same as the subnet mask of the device.
7. Click on OK to close the properties dialog box, then OK to close the second properties dialog box.
8. Close the Local Area Connection Status dialog box.
9. Connect the ethernet crossover cable to the device, then continue with your procedure.

Windows 10

Perform the steps that follow:

1. Select the Windows **Start** button, then select **Settings**.
2. Select **Network & Internet**.
3. Under Related settings select **Network and Sharing Center**, then from the task list on the left of the screen select **Change adapter settings**.
4. Right click **Local Area Connection** (Ethernet), then select **Properties**.
5. Select **Internet Protocol Version 4 (TCP/IPv4)**, then select **Properties**. The Internet Protocol Version 4 (TCP/IPv4) Properties window will open.
6. Select **Use the following IP address**, then enter the IP address and subnet mask.

   Refer to the Configuration Report then:

   - Set the IP address of the laptop one number higher than the device. For example, if the IP address of the device is 192.168.196.112, set the IP address of the laptop to 192.168.196.113.
   - Set the subnet mask of the laptop to the same as the subnet mask of the device.
7. Select **OK** to close the properties dialog box, then **OK** to close the second properties dialog box.
8. Close the Local Area Connection Status dialog box.
9. Connect the Ethernet-crossover cable to the device, then continue with your procedure.

GP 27 System Administrator Password Reset

Purpose

To reset the system administrator password.

Procedure

Perform the steps that follow:

1. To create a 12-digit reset code using the Admin Password Reset Tool:
   a. Run the administrator password reset tool.
   b. Enter the serial number of the device with no punctuation or spaces.
   c. Enter the total page count from the device.
   d. Press **Calculate.**
   e. Note the 12-digit reset code.
2. Download the RESET.PJL file from within Eureka Tip ETI 1393759 or to create a RESET.PJL file using Windows Notepad, perform the following steps:
   a. To open Notepad in Windows 7:
      - Go to: Start > All Programs > Accessories > Notepad.
   b. To open Notepad in Windows 8 or Windows 10:
      - In the search window (next to the Start button or Windows icon) type **Notepad** then select **Notepad** from the list.
   c. Copy the line below and paste into the new Notepad text area, Figure 1:

      @PJL SET JOBATTR="@RSAP=<Pin code>"

      - Replace <PIN code> with the 12-digit reset code generated from the Admin Password Reset Tool.
      - Example of PIN code: @PJL SET JOBATTR="@RSAP=**123456789123**".

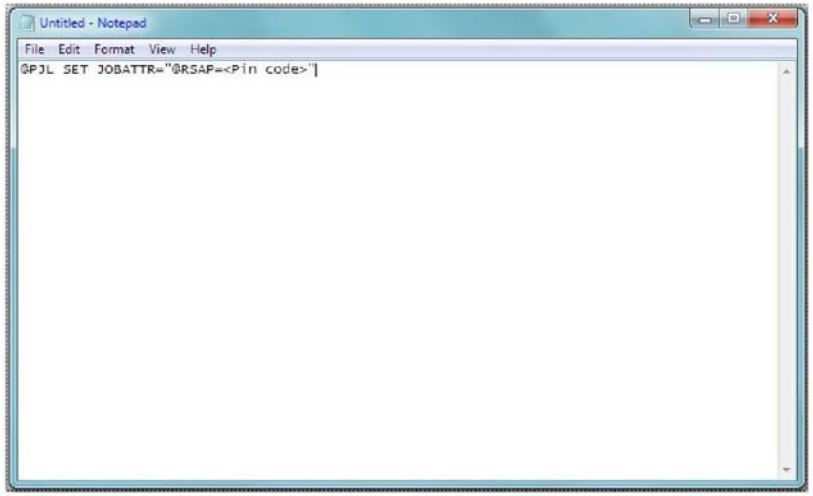

B-1-0368-A

Figure 1 RESET.PJL file example

d. Save this Notepad file as RESET.PJL to your computer.

3. Submit the RESET.PJL file using the DirectPrint utility:

a. Run the DirectPrint utility.

NOTE: *The following files can be found in an attachment to Eureka Tip ETI 1393759.*

- *Admin Password Reset Tool.exe*
- *DirectPrint.exe*
- *RESET.PJL*
- *SA Password Reset process.docx*

b. Click the browse for file button "**…**" to the right of the **Filename** box.

c. Browse to the location of the file, select the RESET.PJL file, the click OK. The RESET.PJL appears in the **Filename** box of the DirectPrint screen.

d. Click the down arrow of the **Printer/IP** address field to select the target machine or type the IP address of the target machine in the **Printer/IP** address field.

e. Click **Print**.

f. A job completion tone will sound and you will observe changes are being made on the UI.

NOTE: *The process only takes a few seconds. If the UI freezes, switch off, then switch on the machine, GP 10.*

g. The administrator password will be reset to '1111'. Use the web UI to access the device to confirm.

4. Use the Procedure steps in Table 1 for troubleshooting a "016-749 File Not Accepted" error.

Table 1 File not accepted procedure

Status Code	Procedure
016-749	• Verify the license string @PJL SET JOBATTR="@RSAP=<Pin code>" was copied to Notepad correctly. • Verify that the PIN code is correct. • When generating the code, make sure the current total meter read was used.

GP 28 Converting from Sold to Metered, or Metered to Sold Toner

- Firmware must be at or above 37.10.91 for B400. If required, perform GP 4.
- Firmware must be at or above 38.10.91 for B405, If required, perform GP 4.

Purpose

To convert the Sold to Metered Toner and vice versa using EWS Home page.

Procedure

1. Log in as an administrator via the web page, GP 19.
2. From the Home screen, on the right side of the Billing/Usage banner, touch Details to get the Total Impressions.
3. Contact Escalated Hardware Support or your NTS, and provide the Device Serial Number and Total Impressions that are displayed on the Billing/Usage screen. You will receive a six character plan conversion code.

   NOTE: *Enter the passcode within 500 page counts of when it was issued, or it will not be valid.*

4. From the Home screen, on the right side of the Supplies banner, touch Details.
5. At the bottom right side of the screen, touch the Supplies Plan icon.
6. Click and select Plan Conversion.
7. Enter the passcode string provided in Step 3, then touch Apply.

GP 40 Glossary of Terms, Acronyms and Abbreviations

Where possible unit designations as appear in ISO 1000 (International Organization for Standardization) and Xerox Standard MN2-905 have been used. All measurements appear in ISO units followed by any conversion in brackets e.g.; 22.5mm (0.885 inches)

Refer to Table 1.

Table 1 Abbreviations

Term	Description
1TM	One Tray Module
3TM	Three Tray Module
AAA	Authentication, Authorisation and Accounting
ABS	Automatic Background Suppression.
AC	Alternating Current
ACAST	Anti Counterfeiting Activities Support/Strategy Team
ACL	Alternating Current Live
ACN	Alternating Current Neutral
AGC	Automatic Gain Control
AHA	Advanced Hardware Architecture
AMPV	Average Monthly Print Volume
ANSAM	Answer Tone, Amplitude Modulated
APS	Auto Paper Selection
ARP	Address Resolution Protocol. Converts an IP address to a MAC address. See RARP.
ASIC	Application Specific Integrated Circuit
B	Bels (applies to sound power level units)
Binding	Part of the communication between modules.
BM	Booklet Maker
BootP	Boot Protocol. AN IP protocol for automatically assigning IP addresses.
BPS	Bits Per Second
BS	Behaviour Specification
BT	Busy Tone
BCR	Bias Charge Roll
BTR	Bias Transfer Roll
C	Celsius
CAT	Customer Admin Tool
CBC	Customer Business Center
CCD	Charged Coupled Device
CCM	Copy Controller Module
CCS	Copy Controller Service
CIPS	Common Image Path Software
CIS	Contact Image Sensor
CL	Copy Lighter. A copy density setting

Table 1 Abbreviations

Term	Description
CQ	Copy Quality
CRC	Cyclic Redundancy Check
CRU	Customer Replaceable Unit
CRUM	Customer Replaceable Unit Monitor
CSE	Customer Service Engineer
CVT	Constant Velocity Transport
DADF	Dual Auto Document Feeder
dB	Decibel (applies to sound pressure level units)
dC	Diagnostic code
DC	Device Controller, generic term for any module that acts as a image handling device e.g., SIP. Digital Copier
DC	Direct Current
DCN	Disconnect
DCS	Digital Command Signal
DDNS	Dynamic Domain Name System
DH	Document Handler
DHCP	Dynamic Host Config Protocol (similar to BootP)
DIMM	Dual In-line Memory Module
DIP	Dual In-line Package (switch)
DIS	Digital Identification Signal
DLM	Dynamically Loadable Module
DM	Document Manager
DMA	Direct Memory Access
DMO	Developing Markets Operations
DMO-E	Developing Markets Operations East
DMO-W	Developing Markets Operations West
DPI	Dots per inch
DRAM	Dynamic Random Access Memory
DST	Daylight Saving Time
DT	Dial Tone
DTMF	Dual Tone Multiple Frequency
DTS	Detack Saw
Dust Off	Routine to return machine to pre-install state
DVMA	Direct Virtual Memory Access
EH&S	Environmental Health and Safety
EJS	Easy Java Simulation
ELT	Extract, Load, Transform
Embedded Fax	A fax system included in a system device
EMC	Electromagnetic Compatibility
EME	Electromagnetic Emission

Table 1 Abbreviations

Term	Description
ENS	Event Notification Service. Used by a software module to alert another module of an event.
EOM	End Of Message
EOP	End Of Procedure
EOR	End Of Retransmission
EPA	Environmental Protection Agency
EPC	Electronic Page Collation (memory dedicated to temporary retention of images captured from the scanner and network controller)
EPROM	Erasable / Programmable Read Only Memory
ERR	End Retransmission Response
ERU	Engineer Replaceable Unit
ESD	Electrostatic Discharge
ESS	Electronic Sub-System (equivalent to NC)
EU	European Union
EUR	Europe
FAR	Fully Active Retard feeder
Fax	Facsimile
FCOT	First Copy Out Time
FDI	Foreign Device Interface
FIFO	First In First Out
Firmware	Software in a ROM
FLASH	On board erasable and re-programmable non volatile memory
FOIP	Fax Over Internet Protocol
FPGA	Field Programmable Gate Array
FPOT	First Print Out Time
FRU	Field Replaceable Unit
FRU	Fuser Replacement Unit
FTP	File Transfer Protocol
FX	Fuji Xerox
G3	Group 3
GMT	Greenwich Mean Time
GND	Ground
GSM	Grams per square metre
GUI	Graphical User Interface
HCF	High Capacity Feeder
HDD	Hard Disk Drive
HFSI	High Frequency Service Intervals
HTTP	Hyper Text Transfer Protocol
HVPS	High Voltage Power Supply
Hz	Hertz
I/O	Input/Output

Table 1 Abbreviations

Term	Description
I2C-bus	Inter Integrated Circuit bus. This provides a simple bidirectional 2-wire bus for efficient inter-IC control. All I2C-bus compatible devices incorporate an interface which allows them to communicate directly with each other via the I2C-bus.
ID	Identification
IDG	Inter document gap
IFax	Internet Fax
IIT	Image Input Terminal
Intlk	Interlock
ioctl	input/output control
IOT	Image Output Terminal
IP	Internet Protocol
IPA	Image Processing Accelerator. Used by the machine scanning services to convert scanned images to a standard format e.g. for scan to file / scan to E-mail for network transmission.
IPS	Image Processing Service
IPSec	Internet Protocol Security
IPX	Internetwork Protocol eXchange
IQ	Image Quality
IQS	Image Quality Specification
IR	Intelligent Ready
ISDN	Integrated Services Digital Network / International Standard Data Network
ISO	International Standards Organization
ITP	Internal Test Pattern
JBA	Job Based Accounting (Network Accounting)
JIS	Japanese Industrial Standards
kg	kilogram
kHz	kilohertz
Kill All	Routine to return all NVM, including protected NVM, to a virgin state. Factory use only
KO	Key Operator
LAN	Local Area Network
LCD	Liquid Crystal Display
LCSS	Low Capacity Stapler Stacker
LDAP	Lightweight Directory Access Protocol (allows sharing of corporate phone book information)
LE	Lead edge
LED	Light Emitting Diode
LEF	Long Edge Feed
LOA	Load Object Attributes
LPD	Line Printer Daemon

Table 1 Abbreviations

Term	Description
LPH	LED Print Head. An LED array in close proximity to and the same width as the photoreceptor. Individual LEDs are switched on/off to develop the image on the xerographic drum.
lpi	Lines per inch
LVF BM	Low Volume Finisher Booklet maker
LVDS	Low Voltage Differential Signal
LVPS	Low Voltage Power Supply
LUI	Local user Interface
m	metre
MAC Address	Media Access Code. This is the basic, unique identifier of a networked device. An incoming message is analysed and an address in another form, such as an IP address, is resolved by a lookup table to a MAC address. The message is then directed to, and accepted by the equipment thus identified. It is the burnt-in, hardware address of a NIC.
Mark Service	Mark Service is the software module that tells the hardware to put toner on paper.
MB	Megabyte (one MB = 1,048,576 bytes = 1024 kilobytes). Mail Box
Mb	Mega bit (one million bits)
MCF	Message Confirmation
MCU	Main Control Unit
MF	Multifunction
mm	millimetre
Modem	MOdulator/DEModulator. Hardware unit that converts the ‘one’ and ‘zero’ binary values from the computer to 2 frequencies for transmission over the public telephone network (modulation). It also converts the 2 frequencies received from the telephone network to the binary values for the computer (demodulation).
Moire	Image quality defect caused by interference between patterned originals and the digital imaging process. Moire patterns are repetitive and visible as bands, plaids or other texture.
MSG	Management Steering Group
MSI	Bypass Tray
ms	millisecond
N	Newton
NA	North America
NC	Network Controller (equivalent to ESS)
NC	Normal Contrast. Copy contrast setting
NCR	No Copying Required
NetBIOS	Network Basic Input / Output System. Software developed by IBM that provides the interface between the PC operating system, the I/O bus, and the network. Since its design, NetBIOS has become a de facto standard.
Nm	Newton metre

Table 1 Abbreviations

Term	Description
NOHAD	Noise, Ozone, Heat, Airflow and Dust
NTP	Network Time Protocol
NVM	Non-Volatile Memory
OA	Open Architecture
ODIO	On Demand Image Overwrite
OEM	Original Equipment Manufacturer
OpCo	Operating Company
OS	Operating System
P/R	Photoreceptor
PABX	Private Automatic Branch Exchange
PC	Personal Computer
PC Fax	Personal Computer Fax
PCI	Peripheral Component Interface
PCL	Printer Control Language
PDF	Adobe Acrobat Portable Document Format
PFM	Paper Feed Module
PIN	Procedural Interrupt Negative
PIN	Personal Identification Number
ping	Packet InterNet Groper. Tool to test connections between nodes by sending and returning test data.
PME	Power Management Event
POPO	Power Off Power On
POO or P of O	Principles of Operation
POST	Power On Self Test
POTS	Plain Old Telephone System
PPM	Prints per minute / Parts Per Million
PR	Photo-Receptor
Process Death	A process has stopped working.
PS	Post Script
PS	Power Supply
PSTN	Private Switched Telephone Network
PSW	Portable Service Workstation
Pthread	Process Thread. A very low level operating system concept for code execution.
PWB	Printed Wiring Board
PWBA	Printed Wiring Board Assembly
PWM	Pulse-Width Modulation
PWS	Portable Work Station
RAM	Random Access Memory

Table 1 Abbreviations

Term	Description
RARP	Reverse Address Resolution. Reverse of ARP. Converts a MAC address to an IP address. The document centre resolves its address using RARP. See also MAC, NIC and ARP.
RDT	Remote Data Transfer
Reg	Registration
Registration Service	Monitors when RPC services go on and offline.
RF	Radio Frequency
RFID	Radio Frequency Identification
RPC	Remote Procedure Call. How the device communicates internally between software modules.
RH	Relative humidity
RMS	Root Mean Square (AC effective voltage)
RNR	Receive Not Ready
RoHS	Restriction of Hazardous Substances
ROM	Read Only Memory
RR	Receive Ready
RS-232, RS-423, RS-422, RS-485	Series of standards for serial communication of data by wire. RS-232 operates at 20kbits/s, RS-423 operates at 100kbits/s, RS-422 and RS-485 operate at 10Mbits/s. See FireWire and USB.
RTC	Real Time Clock
Rx	Receive
S2F	Scan-to-File
SA	Systems Administration
SAKO	Systems Administration Key Operator
SAR	Semi-Active Retard feeder
SBC	Single board controller. Copy, print and UI controllers all on one PWB within the image processing module.
SCD	Software Compatibility Database
SD	Secure Digital, memory card format
Server Fax	A fax system that uses a remote Fax server. Faxes transmit as a Scan to File job sent to the server. Fax receive as print jobs submitted to the Connection Device.
SEF	Short Edge Feed
Semaphore	A variable or abstract data type.
SESS	Strategic Electronic Sub-System
SH	Staple Head
SIM	Subscriber Identity Module (also known as a SOK-Software Option Key)
SIM	Scanner Input Module
SIP	Scanning and Image Processing
SIR	Standard Image Reference
SLP	Service Location Protocol (finds servers)

Table 1 Abbreviations

Term	Description
SM	Scheduled Maintenance
SMART	Systematic Material Acquisition Release Technique
SMB	Server Message Block. Microsoft Server / Client Communications protocol
SMP	Service Maintenance Pack (contains a software package)
SNMP	Simple Network Management Protocol
Snr	Sensor
SOK	Software Option Key (also known as a SOIM-Subscriber Identity Module)
SPAR	Software Problem Action Request
spi	Spots per inch
SPI	Service Provider Interface. Steps to process a job.
SR	Service Representative
SRS	Service Registry Service
SS or S/S	Sub System
SSD	Solid State Drive
SSDP	Simple Service Discovery Protocol
SSID	Service Set Identifier (wireless network name)
STM	Single Tray Module
SU	Staple Unit
SW	Switch
SW or S/W	Software
sync	synchronize
TAR	Take Away Roll
TAR or tar	An archive file format, derived from Tape ARchive
TBC	To Be Confirmed
TBD	To Be Defined
TC	Toner Concentration
TCF	Training Check Field
TCO	Thermal Cutout
TCP/IP	Transmission Control Protocol/Internet Protocol
TE	Trail Edge
Template	A collection of Scan to File attributes that can be conveniently re-used.
TIFF	Tagged Image File Format
TP	Test Point
TRC	Toner Reproduction Curve
TTM	Tandem Tray Module
TTY	Teletype Terminal
Tx	Transmit
UART	Universal Asynchronous Receiver Transmitter
U-boot	Universal Boot Loader
UI	User Interface (display screen)

Table 1 Abbreviations

Term	Description
UK	United Kingdom
UM	Unscheduled Maintenance
USB	Universal Serial Bus. High speed successor to parallel port for local device communications. Operates at 12Mbits/s. See FireWire and RS-232.
USCO	United States Customer Operations
USSG	United States Solutions Group
V.17 / V.29 / V.34	Modem standards
VOIP	Voice Over Internet Protocol
WC	WorkCentre
WEB UI	CentreWare Internet Services
XCL	Xerox Canada Limited
XE	Xerox Europe
XEIP	Xerox Extensible Interface Platform
XLA	Xerox Latin America
XML	eXtensible Markup Language
XPS	XML Paper Specification (printing format)
XRU	Xerographic Replacement Unit
XSA	Xerox Standard Accounting

dC118 Jam Counter

Purpose

To view the number of jams that have occurred. dC118 Jam Counters records the number of occurrences of a jam and allows the counters to be sorted by occurrences.

Procedure

1. Enter Diagnostics, GP 1.
2. Touch dC118 Jam Counter.

   NOTE: *There will be a delay while the machine retrieves the jam counter data.*

3. A list of jams that have occurred is displayed.
4. Touch Close to return to the Diagnostics screen.
5. Exit diagnostics, GP 1.

dC120 Failure Counter

Purpose

To view the faults raised by the machine. dC120 Failure Counter records the number of occurrences of a fault.

Procedure

1. Enter Diagnostics, GP 1.
2. Touch dC120 Failure Counter.

   NOTE: *There will be a delay while the machine retrieves the fault counter data.*

3. A list of faults that have occurred on the machine is displayed.
4. Touch Close to return to the Diagnostics screen.
5. Exit diagnostics, GP 1.

dC122 Shutdown History

Purpose

To view the shutdown history in chronological order and in more detail than shown in dC120 Failure Counter.

Procedure

1. Enter Diagnostics, GP 1.
2. Touch dC122 Shutdown History.
3. The dC122 Shutdown History screen is displayed.
4. Touch Failures to choose between:
   - Paper Jams
   - Document Feeder Jams
   - Failures
   - Last 40 Faults
5. Touch Close to return to the Diagnostics screen.
6. Exit diagnostics, GP 1.

dC125 Faults

Purpose

To view the current faults.

Procedure

1. Enter Diagnostics, GP 1.
2. Touch dC125 Faults.

   NOTE: *There will be a delay while the machine retrieves the fault data.*

3. A list of current faults is displayed.
4. Touch Close to return to the Diagnostics screen.
5. Exit diagnostics, GP 1.

dC131 NVM Read/Write

Purpose

To review and modify values within the machine configuration and control parameters stored in NVM.

Description

Each NVM item is identified using an NVM chain link number in the form XXX-XXX.

Procedure

CAUTION

Only change an NVM value when instructed by a service procedure or when following advice from engineering support.

1. Enter Diagnostics, GP 1.
2. Touch dC131 NVM Read/Write.
3. To read NVM, enter the required chain link number. The current value will be displayed.
4. To write NVM:
   a. Enter the required chain link number.
   b. Touch Change.
   c. Enter a new value.
   d. Touch OK.
   e. The new value will be displayed in the Current Value box.
5. Touch Close to return to the Diagnostics screen.
6. Exit diagnostics, GP 1.

NOTE: *The Edoc CD must be in the CD drive to use the link below.*

For the NVM tables, refer to the NVM Document.

dC132 Machine ID and Billing Data

Purpose

To view and, if required, synchronize the serial and product numbers between the MCU PWB and ESS PWB when a new MCU PWB or ESS PWB has been installed.

The serial and product numbers are held at the following locations:

- MCU PWB (IOT).
- EMMC card (SEEP Data SYS1) on the ESS PWB.
- Soldered NVM (NVM Data SYS2) on the ESS PWB.

NOTE:

- *This function must only be used when a failure has occurred.*
- *When the values at the three locations (IOT, SYS1, SYS2) are the same, there is no need to continue with the procedure.*

Procedure

1. Enter Diagnostics, GP 1.
2. Touch dC132 Device ID and Billing Data.
3. To change the values, touch IOT, SYS1 or SYS2.
4. Follow the on screen instructions to enter the required values, then touch OK.
5. Exit diagnostics, GP 1.

dC135 HFSI Counter

Purpose

To view and reset the Spec Life (threshold value) and the Current Value (usage status) of the high frequency service items (HFSI), Refer to SCP 4 Subsystem Maintenance.

Procedure

1. Enter Diagnostics, GP 1.
2. Touch dC135 HFSI Counter. The HFSI Counter screen will open.
3. Touch Chain-Link, then enter the relevant Chain-Link number or select the component from the list.
4. Touch Details. The Details screen will open, displaying the part name, current value, last replacement data, 2nd last replacement data, 3rd last replacement data and the specified life.
5. To reset an HFSI value:
   a. Touch Reset.
   b. The Reset Current Value screen will open.
   c. Touch Yes to reset the NVM value.

   NOTE: *The three previous replacement values will be updated.*
6. To edit the specified life of an HFSI:
   a. Touch Spec Life.
   b. The Spec Life screen will open.
   c. Enter the new value.
   d. Touch OK.
7. Touch Close to return to the HFSI Counter screen.
8. Touch Close to return to the diagnostics screen.
9. Exit diagnostics, GP 1.

dC140 Analog Component Monitoring

Purpose

To provide tools to start (actuate) and stop (de-actuate) monitoring of specific analog components. The nominal range of the analog value and, when monitoring is active, the current value is displayed. The values are updated at least every second to allow the component state to be monitored.

Procedure

1. Enter Diagnostics, GP 1.
2. Touch dC140 Analog Component Monitoring.
3. Touch Chain-Link.
4. Enter the relevant Chain-Link number, refer to Table 1.
5. Touch OK.
6. Touch Start. The screen will display the information that follows:
   - Chain-Link number of the component.
   - Input or output code clarification.
   - The enabled or disabled state.
   - The output level.
7. To temporarily change the output level of a component:
   a. Touch Level (wrench symbol).
   b. Touch the +/- buttons to enter the new value (1 to 65535).
   c. Touch OK.
8. Touch Stop All to stop component operation.
9. Touch Close to return to the Diagnostics screen.
10. Exit diagnostics, GP 1.

Table 1 Component list

Chain-Link	Component Name	Description
010-200	Heat Roll Sensor: Main	The detected value of the main heat roll sensor. Range: 0 to 1023
010-201	Heat Roll Sensor: Side	The detected value of the side heat roll sensor. Range: 0 to 1023
046-200	BTR Current Monitor	The supplied current to the Bias Transfer Roll. Range: 0 to 1023
091-200	Environment Sensor: Temperature	The temperature value of the environment sensor. Range: 0 to 1023
091-201	Environment Sensor: Humidity	The humidity value of the environment sensor. Range: 0 to 255
092-200	ATC Sensor	Displays the detected value of the ATC sensor. Range: 0 to 1023

dC301 NVM Initialization

Purpose

To reset the values of all applicable NVM parameters to default.

Procedure

1. Enter Diagnostics, GP 1.
2. Touch the dC301 Initialize NVM button.
3. Select the area to be initialized:
   - IOT 1
   - IOT 2
   - Finisher
   - IFM
   - IISS - IIT/IPS
   - IISS - Extension
   - Input Device
   - Sys - System
   - Sys - User
   - Fault Counter
   - HCS 1
   - HCS 2
   - PFIM
4. Touch Start.
5. Follow the UI messages to initialize the NVM.
6. Touch Close to return to the Diagnostics screen.
7. Enter dC131. Ensure NVM value 790-900 is set to 1. If the NVM value had to be changed, switch off, then switch on the machine, GP 10. Verify that the Embedded Web Server is working.
8. Exit diagnostics, GP 1.

dC305 UI Panel Diagnostics

Purpose

To perform diagnosis of the user interface display and

Procedure

1. Enter Diagnostics, GP 1.
2. Touch dC305 UI Panel Diagnostics.
3. Touch LED Test or Audio Test.
4. For the LED test, touch the name of the LED indicator to be tested, then touch the required test. Multiple LEDs can be tested at the same time.
5. To halt the test, touch the LED name and touch Off or touch All Off on the main LED test screen to stop all LED tests
6. For the Audio test, Touch Volume to set the volume, then touch the audio pattern to be tested.
7. Touch Back to return to the Diagnostics screen.
8. Exit diagnostics, GP 1.

dC330 Component Control

Purpose

To show the status of input components e.g. sensors, and to run or energize output components e.g. motors, solenoids.

Description

Output and input component codes are entered into the Component Control Table on the UI, and then checked individually or in permitted groups. The codes in the tables are grouped in function chain order. Refer to GP 2 Fault Codes and History Files.

NOTE: *To check the operation of the fuser temperature, environment sensing and the development housing ATC sensor, refer to dC140 Analog Monitor.*

Go to the appropriate procedure:

- Input Components
- Output Components

Input Components

When the appropriate code is entered, the status of the component is shown on the UI.

NOTE: *Logic levels shown on the Wiring Diagrams with the signal name is the actual signal as measured with a service meter. This is not necessarily the same as the logic state shown on the UI, especially where the output is inverted. When testing components using these control codes, look for a change in state, not for a high or low.*

The displayed status of the input component can be changed by causing the component status to change, e.g. operating a sensor with a sheet of paper.

Go to the appropriate table:

- Table 1 Input codes 010.
- Table 2 Input Codes 041 to 042.
- Table 3 Input Codes 071.

Output Components

When the appropriate code is entered, the component runs or energizes for a set time. The default timeout for most components is set at 90 seconds, but can be as short as 5 seconds. Some components require that other components are run or energized at the same time. It is possible to enter and run or energize up to 6 component control codes (not fax), but only in permitted groups. If illegal combinations of codes are entered, the components do not run or energize.

Go to the appropriate table:

- Table 4 Output Codes 010.
- Table 5 Output Codes 041 to 042.
- Table 6 Output Codes 061.
- Table 7 Output Codes 071.
- Table 8 Output Codes 093.

Procedure

1. Enter Diagnostics, GP 1.

2. Touch dC330 Component Control.

CAUTION

Check the component control tables for components that will damage the machine if run together.

3. Touch Chain-Link.
4. Enter the relevant Chain-Link number.
5. Touch OK.
6. Touch Start. The component will operate and the screen will display the information that follows:
   - Chain-Link number of the component.
   - Input or output code clarification.
   - The component status.
   - Operation counter.
7. Toggle Cyclic Motion to repeat the operation.
8. Touch Stop All to stop component operation.
9. Touch Close to return to the Diagnostics screen.
10. Exit diagnostics, GP 1.

Input Codes

Table 1 Input codes 010

Code	Description	General
010-200	Fusing Relay	High = Energized
010-201	Envelope Mode Sensor Side D	High = Envelope present
010-202	Envelope Mode Sensor Side AD	High = Envelope Present

Table 2 Input Codes 041 to 042

Code	Description	General
041-300	Front Cover Interlock	High = Open
041-301	Rear Cover Interlock	High = Open
042-200	Rear Fan Alarm	High = Alarm not present
042-201	LVPS Fan Alarm	High = Alarm not present

Table 3 Input Codes 071

Code	Description	General
071-100	MSI No Paper Sensor	High = No paper
071-101	Tray 1 No Paper Sensor	High = No paper
071-102	Registration Sensor	High = Document present
071-103	Exit Sensor	High = Document present
071-116	Option Feeder No Paper Sensor 1	High = No paper
071-117	Option Feeder No Paper Sensor 2	High = No paper
071-118	Option Feeder No Paper Sensor 3	High = No paper
071-119	Option Feeder Path Sensor 1	High = Document present
071-120	Option Feeder Path Sensor 2	High = Document present
071-121	Option Feeder Path Sensor 3	High = Document present
071-122	Full Stack Sensor	High = Stack Full
071-200	Option Feeder Motor Alarm 1	High = Alarm Present
071-201	Option Feeder Motor Alarm 2	High = Alarm Present
071-202	Option Feeder Motor Alarm 3	High = Alarm Present

Output Codes

Table 4 Output Codes 010

Code	Displayed Name	Description	General
010-001	Fusing Relay	Energizes the Fusing Relay.	On/off

Table 5 Output Codes 041 to 042

Code	Displayed Name	Description	General
041-001	LVPS	Energizes LVPS.	On/off.
042-001	Rear Fan (Normal)	Runs the rear fan at normal speed	On/off.

Table 5 Output Codes 041 to 042

Code	Displayed Name	Description	General
042-002	Rear Fan (Half)	Runs the Rear Fan at half-speed	On/off
042-003	LVPS Fan	Runs the LVPS Fan at half-speed	On/off

Table 6 Output Codes 061

Code	Displayed Name	Description	General
061-001	ROS Motor	Runs the ROS motor	On/off

Table 7 Output Codes 071

Code	Displayed Name	Description	General
071-001	Main Motor (Normal)	Runs the Main Drive Motor at normal speed	On/off
071-002	Main Motor (Half)	Runs the Main Drive Motor at normal speed	On/off
071-003	Main Motor (Low)	Runs the Main Drive Motor at low speed	On/off
071-004	MSI Feed Solenoid	Energizes the MSI Feed Solenoid	On/off
071-005	Tray 1 Feed Clutch	Energizes the Tray 1 Feed Clutch	On/off
071-006	Registration Clutch	Energizes the Registration Clutch	On/off
071-007	Exit Clutch	Energizes the Exit Clutch	On/off
071-008	Exit Inverter Clutch	Energizes the Exit Inverter Clutch	On/off
071-009	Option Feeder 1 Motor (Normal)	Runs the Option Feeder 1 Motor at normal speed	On/off
071-010	Option Feeder 1 Motor (Half)	Runs the Option Feeder 1 Motor at half speed	On/off
071-011	Option Feeder 1 Motor (Slow)	Runs the Option Feeder 1 Motor at slow speed	On/off
071-012	Option Feeder 2 Motor (Normal)	Runs the Option Feeder 2 Motor at normal speed	On/off
071-013	Option Feeder 2 Motor (Half)	Runs the Option Feeder 2 Motor at half speed	On/off
071-014	Option Feeder 2 Motor (Slow)	Runs the Option Feeder 2 Motor at slow speed	On/off
071-015	Option Feeder 3 Motor (Normal)	Runs the Option Feeder 3 Motor at normal speed	On/off
071-016	Option Feeder 3 Motor (Half)	Runs the Option Feeder 3 Motor at half speed	On/off
071-017	Option Feeder 3 Motor (Slow)	Runs the Option Feeder 3 Motor at slow speed	On/off
071-018	Option Feeder 1 Solenoid	Energizes the Option Feeder 1 Solenoid	On/off
071-019	Option Feeder 2 Solenoid	Energizes the Option Feeder 2 Solenoid	On/off

Table 7 Output Codes 071

Code	Displayed Name	Description	General
071-020	Option Feeder 3 Solenoid	Energizes the Option Feeder 3 Solenoid	On/off
071-021	Option Feeder 1 Take Away Clutch	Energizes the Option Feeder 1 Take Away Clutch	On/off
071-022	Option Feeder 2 Take Away Clutch	Energizes the Option Feeder 2 Take Away Clutch	On/off
071-023	Option Feeder 3 Take Away Clutch	Energizes the Option Feeder 3Take Away Clutch	On/off

Table 8 Output Codes 093

Code	Displayed Name	Description	General
093-001	Dispenser Motor (Normal)	Runs the Toner Dispenser Motor at normal speed	On/off
093-002	Dispenser Motor (Half)	Runs the Toner Dispenser Motor at half speed	On/off

dC355 Hard Disk Diagnostics

Purpose

To initialize and inspect the new hard disk for errors.

Procedure

1. Enter Diagnostics, GP 1.
2. Touch dC355 Hard Disk Diagnostics.
3. Touch Failure Prediction Test or Initialize Hard Disk.
4. Follow the UI messages, then touch Start.
5. The result is displayed. Touch Close.
6. Touch Close to return to the Hard Disk Diagnostics screen.
7. Touch Back to return to the Diagnostics screen.

dC500 Blank Page Threshold Value

Purpose

To set the value that is used to determine what is a blank page when performing blank fax detection.

Procedure

1. Enter Diagnostics, GP 1.
2. Touch dC500 Blank Page Threshold Value.
3. Follow the UI messages.
4. Touch Start.
5. A single side is then scanned and the threshold value coefficient is displayed and set.
6. Touch Close to return to the Diagnostics screen.
7. Exit diagnostics, GP 1.

dC612 Print Test Pattern

Purpose

To print the internal test patterns.

Procedure

1. Enter Diagnostics, GP 1.
2. Touch the dC612 Print Test Pattern button.
3. Select the test pattern required. Refer to IQ1 Image Quality Entry RAP and Table 1. Select from the available options for the required test pattern.
4. Touch the Start button.
5. Touch the Close button to return to the diagnostics screen.
6. Exit diagnostics, GP 1.

Table 1 Internal test patterns

Internal Test Pattern Number	Name	Intended Use	Notes
51	Total Pattern	For Engineering/ Manufacturing use.	Screen must be set to: Gradation, Standard or Fineness.
52	Total Pattern (Manufacturer)	For Engineering/ Manufacturing use.	Screen must be set to: Gradation, Standard or Fineness.
53	All Solid (1-Sided)	For Engineering/ Manufacturing use.	Screen must be set to: Gradation, Standard or Fineness.
54	All Solid (2-Sided)	For Engineering/ Manufacturing use.	Screen must be set to: Gradation, Standard or Fineness.
55	Whole-page Halftone	Detection of banding and defect detection.	Screen must be set to: Gradation, Standard or Fineness.
57	Alignment	Checking alignment	Screen must be set to: Gradation, Standard or Fineness.
58	Gradation	General Image Quality problem isolation.	Screen must be set to: Gradation, Standard or Fineness.
63	Pitch Confirmation	General Image Quality problem and repeating defect isolation.	Screen must be set to: Gradation, Standard or Fineness.
64	Ghosting	Detection of Ghosting.	Screen must be set to: Gradation, Standard or Fineness.
112	IIT Analog Gradation	For Engineering/ Manufacturing use.	Screen must be set to: Copy Error Diffusion
115	Pre IPS/FS Increment	For Engineering/ Manufacturing use.	Screen must be set to: Copy Error Diffusion
119	Pre IPS/SS Increment	For Engineering/ Manufacturing use.	Screen must be set to: Copy Error Diffusion

Table 1 Internal test patterns

Internal Test Pattern Number	Name	Intended Use	Notes
120	Even Density of Whole Page	Detection of banding and defect detection.	Screen must be set to: Copy Error Diffusion
123	Pre IPS/Shading Data BW	For Engineering/ Manufacturing use.	Screen must be set to: Copy Error Diffusion
128	Post IPS/Grid/BW	Detection of skew and distortion defects.	Screen must be set to: Copy Error Diffusion

dC945 IIT Calibration

Purpose

To perform white reference adjustment, CCD calibration, optical axis deviation correction and shading correction for the scanner.

CAUTION

Do not perform this routine unless directed to do so by a Image Quality Repair Analyst Procedure (RAP), repair procedure or service bulletin instruction.

Procedure

1. Enter diagnostics, GP 1.
2. Touch dC945 IIT Calibration. The IIT Calibration screen is displayed.
3. Choose and touch the relevant procedure:
   - White Reference Adjustment - Side 1
   - CCD Calibration - Side 1
   - Optical Axis Correction
   - White Reference Adjustment - Side 2
   - CCD Calibration - Side 2
   - Shading Correction - Side 2
   - Hex to Dec Conversion

White Reference Adjustment - Side 1

To perform automatic correction for IIT white sensitivity level and gray balance.

1. Touch White Reference Adjustment - Side 1.
2. Follow the UI messages.
3. Touch Close.
4. Touch the back button (top left) to return to the Diagnostics screen.
5. Perform dC945 CCD Calibration - Side 1.

CCD Calibration - Side 1

To perform automatic correction for the CCD color sensitivity dispersion and when the yellow component of the image looks abnormal.

1. Touch CCD Calibration - Side 1
2. Follow the UI messages.
3. If the result is NG (No Good) perform the necessary adjustment.
4. Touch Close.
5. Touch the back button (top left) to return to the Diagnostics screen.
6. Perform dC945 CCD Calibration - Side 1.

Optical Axis Correction

To automatically measure and adjust the skew for platen and side registration.

1. Touch Optical Axis Correction.
2. Follow the UI messages.
3. If the result is NG (No Good) perform the necessary adjustment.
4. Touch Close.
5. Touch the back button (top left) to return to the Diagnostics screen.
6. Perform dC945 CCD Calibration - Side 1.

White Reference Adjustment - Side 2

To perform automatic correction for IIT white sensitivity level and gray balance.

1. Touch White Reference Adjustment - Side 2.
2. Follow the UI messages.
3. Touch Close.
4. Touch the back button (top left) to return to the Diagnostics screen.
5. Perform dC945 CCD Calibration - Side 1.

CCD Calibration - Side 2

To perform automatic correction for the CCD color sensitivity dispersion and when the yellow component of the image looks abnormal.

1. Touch CCD Calibration - Side 2.
2. Follow the UI messages.
3. If the result is NG (No Good) perform the necessary adjustment.
4. Touch Close.
5. Touch the back button (top left) to return to the Diagnostics screen.
6. Perform dC945 CCD Calibration - Side 1.

Shading Correction - Side 2

To perform shading correction for the side 2 scanner.

1. Touch Shading Correction - Side 2.
2. Follow the UI messages.
3. If the result is NG (No Good) perform the necessary adjustment.
4. Touch Close.
5. Touch the back button (top left) to return to the Diagnostics screen.
6. Perform dC945 CCD Calibration - Side 1.

Hex to Dec Conversion

To provide the procedure for HEX to DEC conversion.

Using Windows 7

1. Go to: **Start** > **All Programs** > **Accessories** > **Calculator.**
2. Click on the calculator View menu button.
3. Select Programmer.
4. Select the Hex button.
5. Enter the Hex number.
6. Select the Dec button and the result is shown.

Using Windows 10

1. In the search window (next to the Start button or Windows icon) type Calculator. Then select Calculator from the list.
2. Click on the calculator menu button.
3. Select Programmer.
4. Select the Hex button.
5. Enter the Hex number.
6. The result is shown in the DEC field.

dC1010 Signals Sending Test

Purpose

For information only, no service action required.

dC1011 Relay On/Off Test

Purpose

For information only, no service action required.

Tags/MODs

Purpose

To provide a list of all the tag numbers used, together with a description of each of the machine modifications.

Description

Each modification to the system is assigned a unique tag number. This section of the service documentation contains a listing and brief description of all change tags.

Change tags listed in this section are listed by machine module. The module to which the tag relates is identified by the tag prefix letter.

- ESS Tags - TAG 001

Tag/MOD Information

Information that may be included with each tag item is as follows:

- Tag - identifies the control number for the tag.
- Class - identifies the classification code as listed in Classification Codes.
- Use - indicates the block build or model designation of the machine.
- Manufacturing Serial Number - indicates the serial number of the factory-built machines with the modification installed.
- Name - indicates the name of the retrofit.
- Purpose - provides a brief description of the modification.
- Kit Number - identifies the part number of the kit or part required to install the modification.
- Parts List On - identifies the Part List location of the modification part.
- Reference - Indicates all other Tag/MOD numbers that are related to this product configuration. These may supercede or be superceded by another Tag/MOD.

Mod/Tag Plate Location

Tags are identified by a tag number which is recorded on a tag matrix inside the front door.

Classification Codes

The class or classification codes are described in Table 1.

Table 1 Classification codes

NASG Code	XE Code	Description
-	1	Safety: install this tag immediately.
M	2	Mandatory: install this tag at the next opportunity.
R	3	Repair: install this tag as a repair, at the failure of a component.
O	4	Optional: install as a customer option or a field engineering decision.
S	4	Situational: install as the situation demands.
N	5	Manufacturing: cannot be installed in the field.
-	6	Refurbishing only.

ESS Tags

TAG: 001

CLASS: O

USE: MFG. serial numbers not applicable.

NAME: **NextWave® ESS PWB Update**

PURPOSE: The current (B0) controller chip is no longer available.

The controller chip on the new (C0) ESS PWB does not support firmware versions below XX.2X.XX. Installing the new (C0) ESS PWB forces software version XX.2X.XX or above to be installed.

Refer to service bulletin **T8786-05-16** to install appropriate ESS PWB and associated firmware version.

KIT NUMBER: Not applicable

PARTS LIST ON: PL 18.1A and PL 18.1B

7 Wiring Data

Plug/Jack Location List
PJ Locations..... 7-3

Wiring Diagrams
Wiring Diagrams..... 7-15

PJ Locations

PJ Location Table

To locate a connector, go to the appropriate table.

- P/J Connectors B405, Table 1.
- P/J Connectors B400, Table 2.

Table 1 P/J Connectors B405

P/Js	Figure	Description
10	Figure 2	Connects MCU PWB, PL 18.2 Item 2 and main motor harness assembly PL 18.3B Item 11.
11	Figure 2	Connects MCU PWB PL 18.2 Item 2 and dispenser motor harness assembly, PL 18.3B Item 10.
12	Figure 2	Connects MCU PWB, PL 18.2 Item 2 and registration clutch PL 15.2 Item 4
13	Figure 2	Not used.
14	Figure 2	Connects MCU PWB, PL 18.2 Item 2 and cassette feed clutch PL 15.2 Item 16.
15	Figure 2	Connects MCU PWB, PL 18.2 Item 2 and MSI feed solenoid PL 13.1 Item 5.
16	Figure 2	Connects MCU PWB, PL 18.2 Item 2 and T21 exit clutch assembly PL 3.1 Item 6.
17	Figure 2	Connects MCU PWB, PL 18.2 Item 2 and T24 inverter clutch assembly PL 3.1 Item 7.
18	Figure 2	Connects MCU PWB, PL 18.2 Item 2 and ROS assembly, PL 2.1 Item 1.
19	Figure 2	Connects MCU PWB, PL 18.2 Item 2 and ROS-MCU harness PL 2.1 Item 2.
20	Figure 2	Connects MCU PWB, PL 18.2 Item 2 and ESS harness assembly PL 18.3B Item 3.
21	Figure 2	Connects MCU PWB, PL 18.2 Item 2 and MCU 24V harness assembly PL 18.3B Item 6.
22	Figure 2	Connects MCU PWB, PL 18.2 Item 2 and LV harness assembly, PL 18.3B Item 5.
23	Figure 2	Connects MCU PWB, PL 18.2 Item 2 and FSR harness assembly PL 18.3B Item 9.
24	Figure 2	Connects MCU PWB, PL 18.2 Item 2 and option feeder harness assembly PL 18.3B Item 8.
25	Figure 2	Connects MCU PWB, PL 18.2 Item 2 and Xerographics CRUM harness assembly PL 18.3B Item 12.
26	Figure 2	Connects MCU PWB, PL 18.2 Item 2 and HV harness assembly PL 18.3B Item 13.
27	Figure 2	Connects MCU PWB, PL 18.2 Item 2 and exit sensor harness assembly PL 18.3B Item 15.
30	Figure 2	Not used.

Table 1 P/J Connectors B405

P/Js	Figure	Description
101	Figure 1	Connects ESS PWB, PL 18.1B Item 5, and EMMC card PL 18.1B Item 6.
101	Figure 4	Connects main drive assembly, PL 3.1 Item 1, and main motor harness assembly, PL 18.3B Item 11.
111	Figure 5	Connects dispenser motor PL 5.1 Item 9 and dispenser motor harness assembly, PL 18.3B Item 10.
200	Figure 1	Connects LVPS PWB PL 18.1B Item 10 and inlet harness assembly, PL 18.3B Item 1.
201	Figure 1	Connects LVPS PWB PL 18.1B Item 10 and FSR harness assembly PL 18.3B Item 9.
210	Figure 1	Connects LVPS PWB PL 18.1B Item 10 and MCU 24V harness assembly PL 18.3B Item 6.
211	Figure 1	Connects LVPS PWB PL 18.1B Item 10 and ESS power harness assembly PL 18.3B Item 4.
212	Figure 1	Connects LVPS PWB PL 18.1B Item 10 and main motor harness assembly PL 18.3B Item 11.
213	Figure 1	Connects LVPS PWB PL 18.1B Item 10 and option feeder harness assembly PL 18.3B Item 8.
220	Figure 1	Connects LVPS PWB PL 18.1B Item 10 and LV harness assembly, PL 18.3B Item 5.
230	Figure 1	Connects LVPS PWB PL 18.1B Item 10 and interlock harness assembly PL 15.1B Item 4.
231	Figure 1	Connects LVPS PWB PL 18.1B Item 10 and front interlock switch assembly PL 18.1B Item 98.
233	Figure 4	Connects fuser PL 7.1 Item 1 and FSR harness assembly PL 18.3B Item 9.
240	Figure 1	Connects LVPS PWB PL 18.1B Item 10 and rear fan harness assembly PL 18.3B Item 16
241	Figure 1	Connects LVPS PWB PL 18.1B Item 10 and LVPS fan, PL 4.1B Item 1.
243	Figure 6	Connects feeder drawer 1 harness assembly PL 11.1B Item 18 and option feeder harness assembly PL 18.3B Item 8.
253	Figure 5	Connects toner CRUM connector assembly PL 5.1 Item 2 and Xerographics CRUM harness assembly PL 18.3B Item 12.
254	Figure 5	Connects Xerographic connector assembly PL 5.1 Item 10 and Xerographics CRUM harness assembly PL 18.3B Item 12.
260	Figure 1	Connects LVPS PWB, PL 18.1B Item 10, and the front interlock switch assembly, PL 18.1B Item 23.
261	Figure 2	Connects HVPS PL 18.2 Item 5 and HV harness assembly PL 18.3B Item 13.
271	Figure 4	Connects exit sensor PL 17.1 Item 1 and exit sensor harness assembly PL 18.3B Item 15.

Table 1 P/J Connectors B405

P/Js	Figure	Description
302	Figure 2	Connects ESS PWB, PL 18.1B Item 5, and HDD PL 18.1B Item 91.
310	Figure 1	Connects ESS PWB, PL 18.1B Item 5 and HDD PL 18.1B Item 91.
340	Figure 1	ESS PWB, PL 18.1B Item 5 Ethernet Port
419	Figure 6	Connects option tray PWB assembly PL 11.1B Item 5 and feeder drawer 1 harness assembly PL 11.1B Item 18.
420	Figure 6	Connects option tray PWB assembly PL 11.1B Item 5 and C2 turn harness assembly PL 11.1B Item 33.
421	Figure 6	Connects option tray PWB assembly, PL 11.1B Item 5 and C2 size harness assembly, PL 11.1B Item 22.
422	Figure 6	Connects option tray PWB assembly PL 11.1B Item 5 and tray motor harness assembly PL 11.1B Item 11.
430	Figure 1	Connects ESS PWB, PL 18.1B Item 5 and speaker assembly PL 18.1B Item 19.
432	Figure 1	Connects ESS PWB, PL 18.1B Item 5 and fax harness assembly PL 18.1B Item 21.
441	Figure 1	Connects ESS PWB, PL 18.1B Item 5 and ESS power harness assembly, PL 18.3B Item 4.
451	Figure 1	Connects ESS PWB, PL 18.1B Item 5 and IIT assembly, PL 21.1 Item 14.
452	Figure 1	Connects ESS PWB, PL 18.1B Item 5 and IIT assembly, PL 21.1 Item 14.
453	Figure 1	Connects ESS PWB, PL 18.1B Item 5 and scanner assembly, PL 21.1 Item 1.
454	Figure 1	Connects ESS PWB, PL 18.1B Item 5 and IIT assembly, PL 21.1 Item 14.
501	Figure 3	Connects ROS assembly PL 2.1 Item 1 and ROS-MCU harness PL 2.1 Item 2.
502	Figure 3	Connects ROS assembly PL 2.1 Item 1 and video harness PL 2.1 Item 3
631	Figure 1	Connects ESS PWB, PL 18.1B Item 5 and front USB harness, PL 18.1B Item 17.
632	Figure 1	Connects ESS PWB, PL 18.1B Item 5 and ICCR USB harness, PL 1.2B Item 6
1315	Figure 1	ESS PWB, PL 18.1B Item 5 USB Port
1344	Figure 1	Connects ESS PWB, PL 18.1B Item 5 and wireless adapter, PL 18.1B Item 90.
1350	Figure 1	Connects fax PWB, PL 18.1B Item 15 and fax harness assembly, PL 18.1B Item 21.
1352	Figure 1	Connects ESS PWB, PL 18.1B Item 5 and UI harness assembly, PL 1.1B Item 1.

Table 1 P/J Connectors B405

P/Js	Figure	Description
1421	Figure 1	Connects ESS PWB, PL 18.1B Item 5 and HARNESS ASSY ESS, PL 18.3B Item 3.
1422	Figure 1	Connects ESS PWB, PL 18.1B Item 5 and video harness, PL 2.1 Item 3.
2401	Figure 4	Connects rear fan, PL 19.3B Item 9 and rear fan harness assembly, PL 18.3B Item 16.
4201	Figure 6	Connects option feed clutch assembly, PL 11.1B Item 8 and C2 turn harness assembly, PL 11.1B Item 33.
4203	Figure 6	Connects no paper harness assembly, PL 11.2 Item 3 and C2 turn harness assembly, PL 11.1B Item 33.
4211	Figure 6	Connects switch sensor assembly and C2 size sensor harness assembly, PL 11.1B Item 22.
4212	Figure 6	Connects path sensor, PL 11.4 Item 4 and registration harness assembly, PL 11.4 Item 7.
4213	Figure 6	Connects takeaway clutch assembly, PL 11.2 Item 20 and C2 size sensor harness assembly, PL 11.1B Item 22.
4214	Figure 6	Connects C2 size sensor harness assembly, PL 11.1B Item 22 and registration harness assembly, PL 11.4 Item 7.
4221	Figure 6	Connects motor assembly, PL 11.1B Item 19 and tray motor harness assembly, PL 11.1B Item 11.
4231	Figure 6	Connects feeder harness assembly 2, PL 11.1B Item 22 and feeder harness assembly 1, PL 11.1B Item 18.
6101	Figure 1	ESS PWB, PL 18.1B Item 5, FDI Port
7401	Figure 1	Connects ESS PWB, PL 18.1B Item 5 and EMMC card, PL 18.1B Item 6.
MJ1	Figure 1	Connects fax PWB, PL 18.1B Item 15 and Network cable
MJ2	Figure 1	Connects fax PWB, PL 18.1B Item 15 and Network cable

Table 2 P/J Connectors B400

P/Js	Coordinates	Description
10	Figure 8	Connects MCU PWB, PL 18.2 Item 2 and main motor harness assembly PL 18.3A Item 11.
11	Figure 8	Connects MCU PWB, PL 18.2 Item 2 and dispenser motor harness assembly, PL 18.3A Item 10.
12	Figure 8	Connects MCU PWB, PL 18.2 Item 2 and registration clutch, PL 15.2 Item 4.
13	Figure 8	Not used

Table 2 P/J Connectors B400

P/Js	Coordinates	Description
14	Figure 8	Connects MCU PWB, PL 18.2 Item 2 and cassette feed clutch, PL 15.2 Item 16.
15	Figure 8	Connects MCU PWB, PL 18.2 Item 2 and MSI feed solenoid PL 13.1 Item 5.
16	Figure 8	Connects MCU PWB, PL 18.2 Item 2 and T21 exit clutch assembly, PL 3.1 Item 6.
17	Figure 8	Connects MCU PWB, PL 18.2 Item 2 and T24 inverter clutch assembly, PL 3.1 Item 7.
18	Figure 8	Connects MCU PWB, PL 18.2 Item 2 and ROS assembly PL 2.1 Item 1.
19	Figure 8	Connects MCU PWB, PL 18.2 Item 2 and ROS-MCU harness, PL 2.1 Item 2.
20	Figure 8	Connects MCU PWB, PL 18.2 Item 2 and ESS harness assembly, PL 18.3A Item 3.
21	Figure 8	Connects MCU PWB, PL 18.2 Item 2 and MCU 24V harness assembly, PL 18.3A Item 6.
22	Figure 8	Connects MCU PWB, PL 18.2 Item 2 and LV harness assembly, PL 18.3A Item 5.
23	Figure 8	Connects MCU PWB, PL 18.2 Item 2 and FSR harness assembly, PL 18.3A Item 9.
24	Figure 8	Connects MCU PWB, PL 18.2 Item 2 and option feeder harness assembly, PL 18.3A Item 8.
25	Figure 8	Connects MCU PWB, PL 18.2 Item 2 and Xerographic CRUM harness assembly PL 18.3A Item 12.
26	Figure 8	Connects MCU PWB, PL 18.2 Item 2 and HV harness assembly, PL 18.3A Item 13.
27	Figure 8	Connects MCU PWB, PL 18.2 Item 2 and exit sensor harness assembly PL 18.3A Item 15.
30	Figure 8	Not used.
101	Figure 7	Connects ESS PWB, PL 18.1A Item 5 and EMMC card, PL 18.1A Item 6.
101	Figure 10	Connects main drive assembly, PL 3.1 Item 1 and main motor harness assembly, PL 18.3A Item 11.
111	Figure 11	Connects dispenser motor, PL 5.1 Item 9 and dispenser motor harness assembly, PL 18.3A Item 10.
200	Figure 7	Connects LVPS PWB, PL 18.1A Item 10 and inlet harness assembly, PL 18.3A Item 1.
201	Figure 7	Connects LVPS PWB, PL 18.1A Item 10 and FSR harness assembly, PL 18.3A Item 9.
210	Figure 7	Connects LVPS PWB, PL 18.1A Item 10 and MCU 24V harness assembly, PL 18.3A Item 6.
211	Figure 7	Connects LVPS PWB, PL 18.1A Item 10 and ESS power harness assembly, PL 18.3A Item 4.

Table 2 P/J Connectors B400

P/Js	Coordinates	Description
212	Figure 7	Connects LVPS PWB, PL 18.1A Item 10 and main motor harness assembly, PL 18.3A Item 11.
213	Figure 7	Connects LVPS PWB, PL 18.1A Item 10 and option feeder harness assembly, PL 18.3A Item 8.
220	Figure 7	Connects LVPS PWB, PL 18.1A Item 10 and LV harness assembly, PL 18.3A Item 5.
230	Figure 7	Connects LVPS PWB, PL 18.1A Item 10 and interlock harness assembly, PL 15.1A Item 4.
233	Figure 10	Connects fuser, PL 7.1 Item 1 and FSR harness assembly, PL 18.3A Item 9.
240	Figure 7	Connects LVPS PWB, PL 18.1A Item 10 and rear fan harness assembly, PL 18.3A Item 16.
241	Figure 7	Connects LVPS PWB, PL 18.1A Item 10 and LVPS fan, PL 4.1A Item 1.
243	Figure 12	Connects drawer 1 feeder harness assembly, PL 11.1A Item 18 and option feeder harness assembly, PL 18.3A Item 8.
253	Figure 11	Connects toner CRUM connector assembly, PL 5.1 Item 2 and Xerographic CRUM harness assembly, PL 18.3A Item 12.
254	Figure 11	Connects Xerographic connector assembly, PL 5.1 Item 10 and Xerographic CRUM harness assembly, PL 18.3A Item 12.
260	Figure 7	Connects LVPS PWB, PL 18.1A Item 10, and the front interlock switch assembly, PL 18.1A Item 12.
261	Figure 8	Connects HVPS, PL 18.2 Item 5 and HV harness assembly PL 18.3A Item 13.
271	Figure 10	Connects exit sensor, PL 17.1 Item 1 and exit sensor harness assembly, PL 18.3A Item 15.
272	Figure 10	Connects full stack sensor, PL 17.1 Item 9 and exit sensor harness assembly, PL 18.3A Item 15.
302	Figure 7	Connects ESS PWB, PL 18.1A Item 5 and HDD, PL 18.1A Item 91
310	Figure 7	Connects ESS PWB, PL 18.1A Item 5 and HDD, PL 18.1A Item 91
340	Figure 7	ESS PWB, PL 18.1A Item 5 Ethernet Port.
346	Figure 7	ESS PWB, PL 18.1A Item 5 USB Port
419	Figure 12	Connects option tray PWB assembly, PL 11.1A Item 5 and drawer 1 feeder harness assembly, PL 11.1A Item 18.
420	Figure 12	Connects option tray PWB assembly, PL 11.1A Item 5 and C2 turn harness assembly, PL 11.1A Item 33.
421	Figure 12	Connects option tray PWB assembly, PL 11.1A Item 5 and C2 size sensor harness assembly, PL 11.1A Item 32.
422	Figure 12	Connects option tray PWB assembly, PL 11.1A Item 5 and tray motor harness assembly, PL 11.1A Item 11.
423	Figure 12	Connects option tray PWB assembly, PL 11.1A Item 5 and drawer 2 feeder harness assembly, PL 11.1A Item 31.
441	Figure 7	Connects ESS PWB, PL 18.1A Item 5 and ESS power harness assembly, PL 18.3A Item 4.

Table 2 P/J Connectors B400

P/Js	Coordinates	Description
501	Figure 9	Connects ROS assembly, PL 2.1 Item 1 and ROS-MCU harness, PL 2.1 Item 2.
502	Figure 9	Connects ROS assembly, PL 2.1 Item 1 and video harness, PL 2.1 Item 3.
631	Figure 7	Connects ESS PWB, PL 18.1A Item 5 and front USB harness, PL 18.1A Item 13.
1315	Figure 7	ESS PWB, PL 18.1A Item 5 USB Port
1344	Figure 7	Connects ESS PWB, PL 18.1A Item 5 and wireless adapter, PL 18.1A Item 90.
1362	Figure 7	Connects ESS PWB, PL 18.1A Item 5 and UI console assembly, PL 1.1A Item 4.
1421	Figure 7	Connects ESS harness assembly, PL 18.3A Item 3 and ESS PWB, PL 18.1A Item 5.
1422	Figure 7	Connects ESS PWB, PL 18.1A Item 5 and video harness, PL 2.1 Item 3.
2401	Figure 10	Connects rear fan, PL 19.3A Item 9 and rear fan harness assembly, PL 18.3A Item 16.
4201	Figure 12	Connects option feeder clutch assembly, PL 11.1A Item 8 and C2 turn harness assembly, PL 11.1A Item 33.
4203	Figure 12	Connects no paper sensor harness assembly, PL 11.2 Item 3 and C2 turn harness assembly, PL 11.1A Item 33.
4211	Figure 12	Connects switch sensor assembly and C2 size harness assembly, PL 11.1A Item 32.
4212	Figure 12	Connects path sensor, PL 11.4 Item 4 and option feeder registration harness assembly, PL 11.4 Item 7.
4213	Figure 12	Connects takeaway clutch assembly, PL 11.2 Item 20 and C2 size sensor harness assembly, PL 11.1A Item 32.
4214	Figure 12	Connects C2 size sensor harness assembly, PL 11.1A Item 32 and option feeder registration harness assembly, PL 11.4 Item 7.
4221	Figure 12	Connects motor assembly, PL 11.1A Item 19 and tray motor harness assembly, PL 11.1A Item 11.
4231	Figure 12	Connects feeder harness assembly 2, PL 11.1A Item 31 and feeder harness assembly 1, PL 11.1A Item 18.
6101	Figure 7	ESS PWB, PL 18.1A Item 5 FDI Port
7401	Figure 7	Connects ESS PWB, PL 18.1A Item 5 and EMMC card, PL 18.1A Item 6

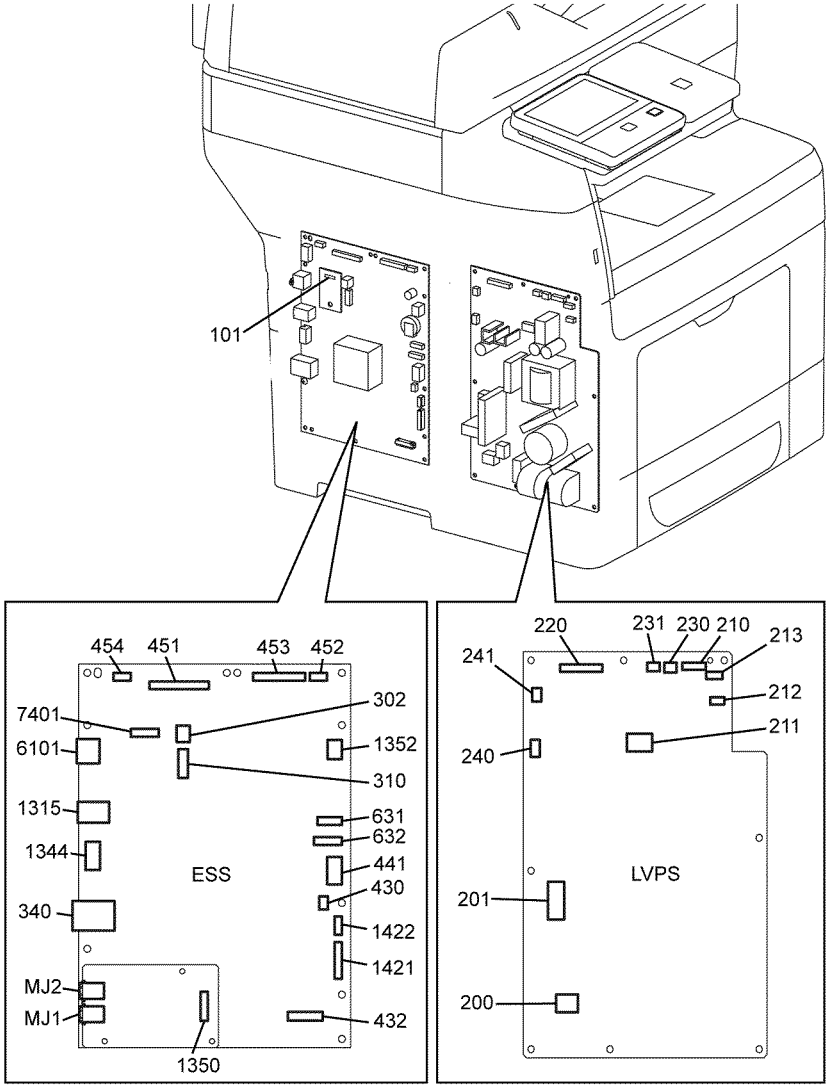

TB-1-0290-A

Figure 1 ESS and LVPS

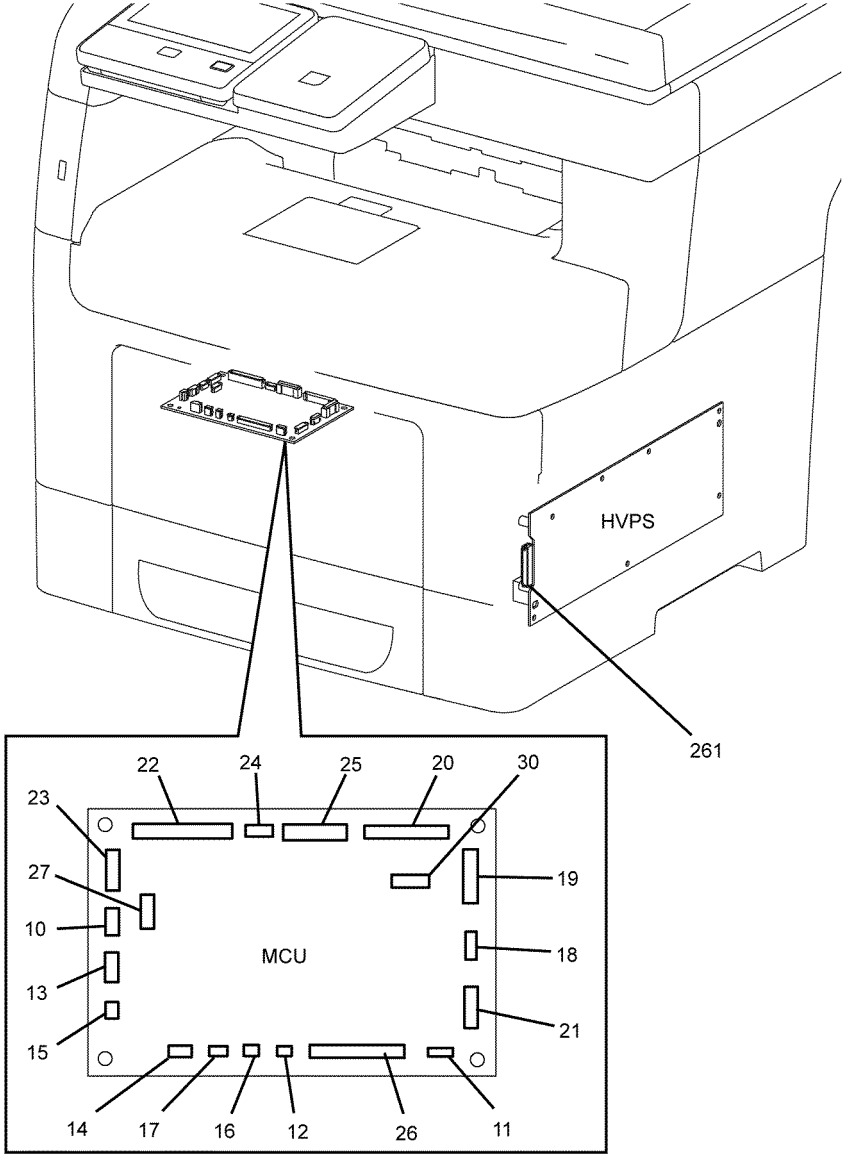

TB-1-0291-A

Figure 2 MCU

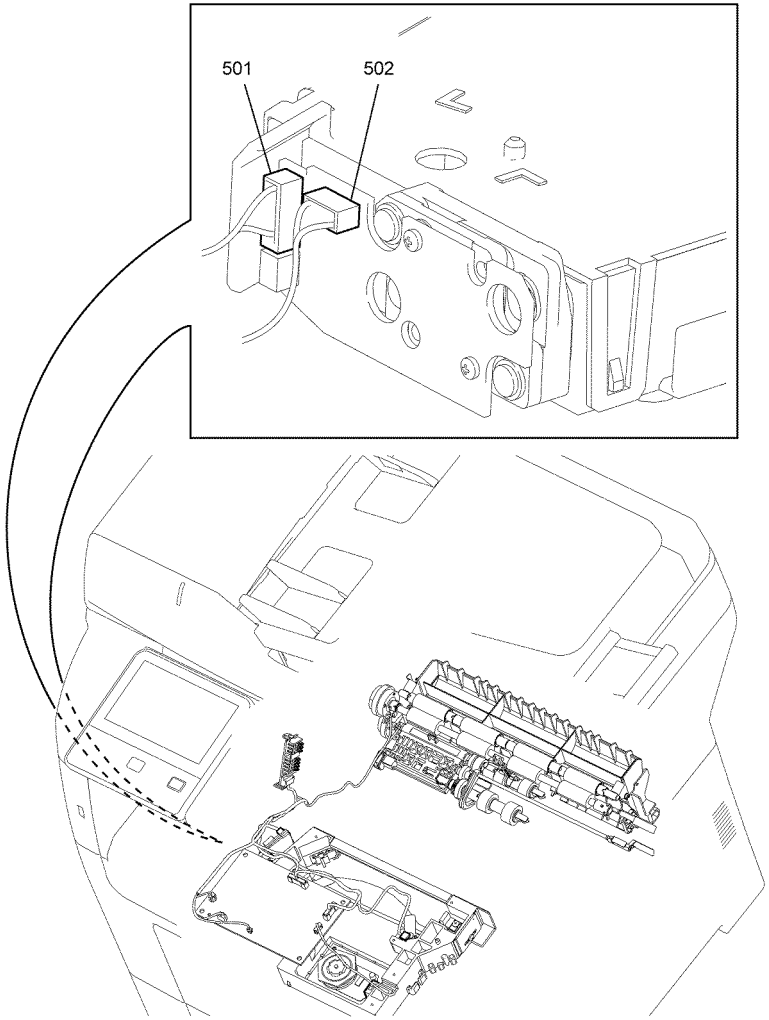

TB-1-0292-A

Figure 3 ROS

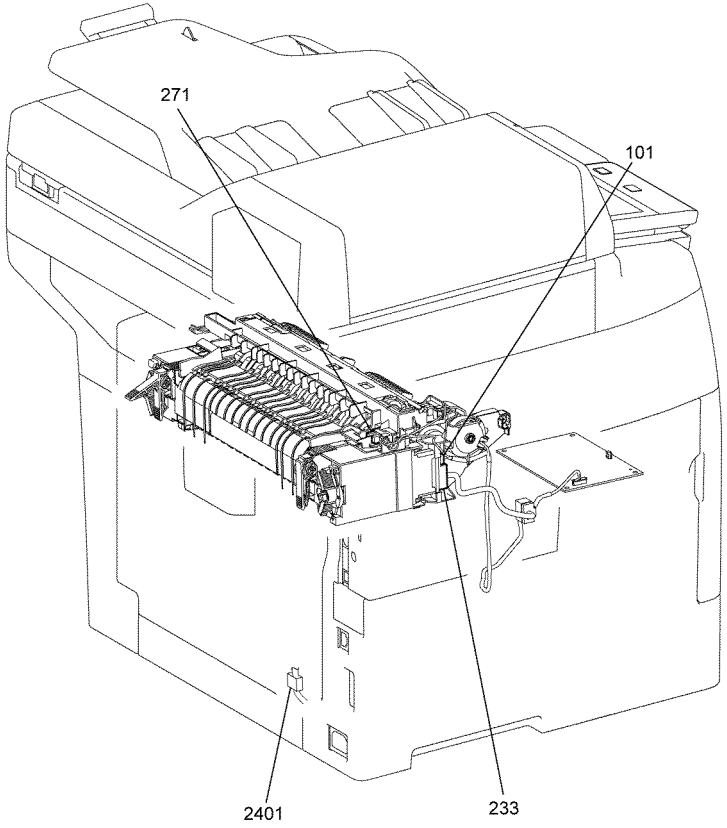

TB-1-0293-A

Figure 4 Fuser, Drive

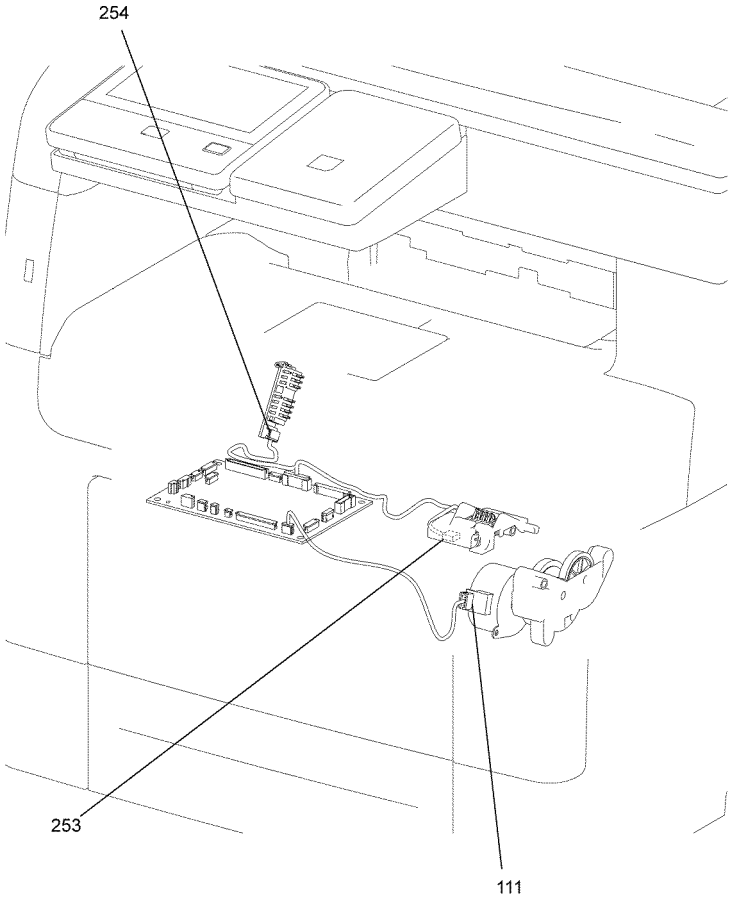

TB-1-0294-A

Figure 5 Xerographics

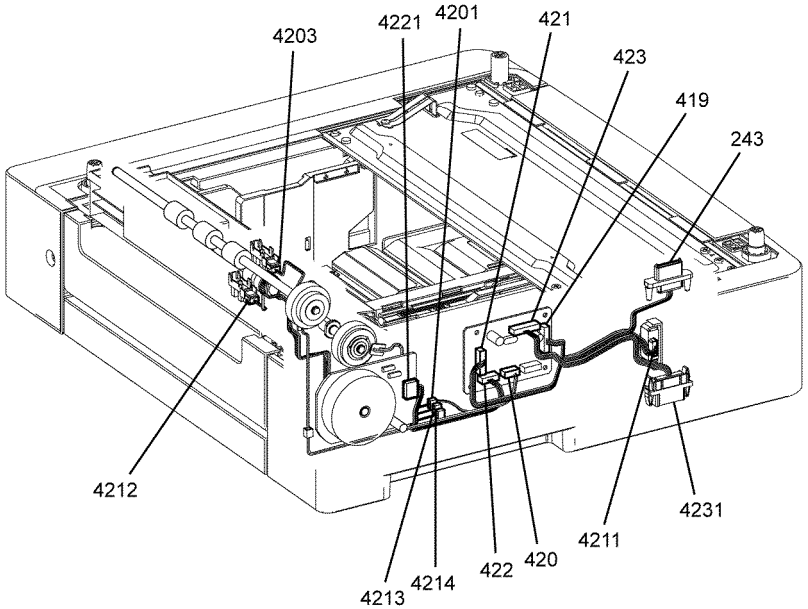

TB-1-0295-A

Figure 6 Option Feeder

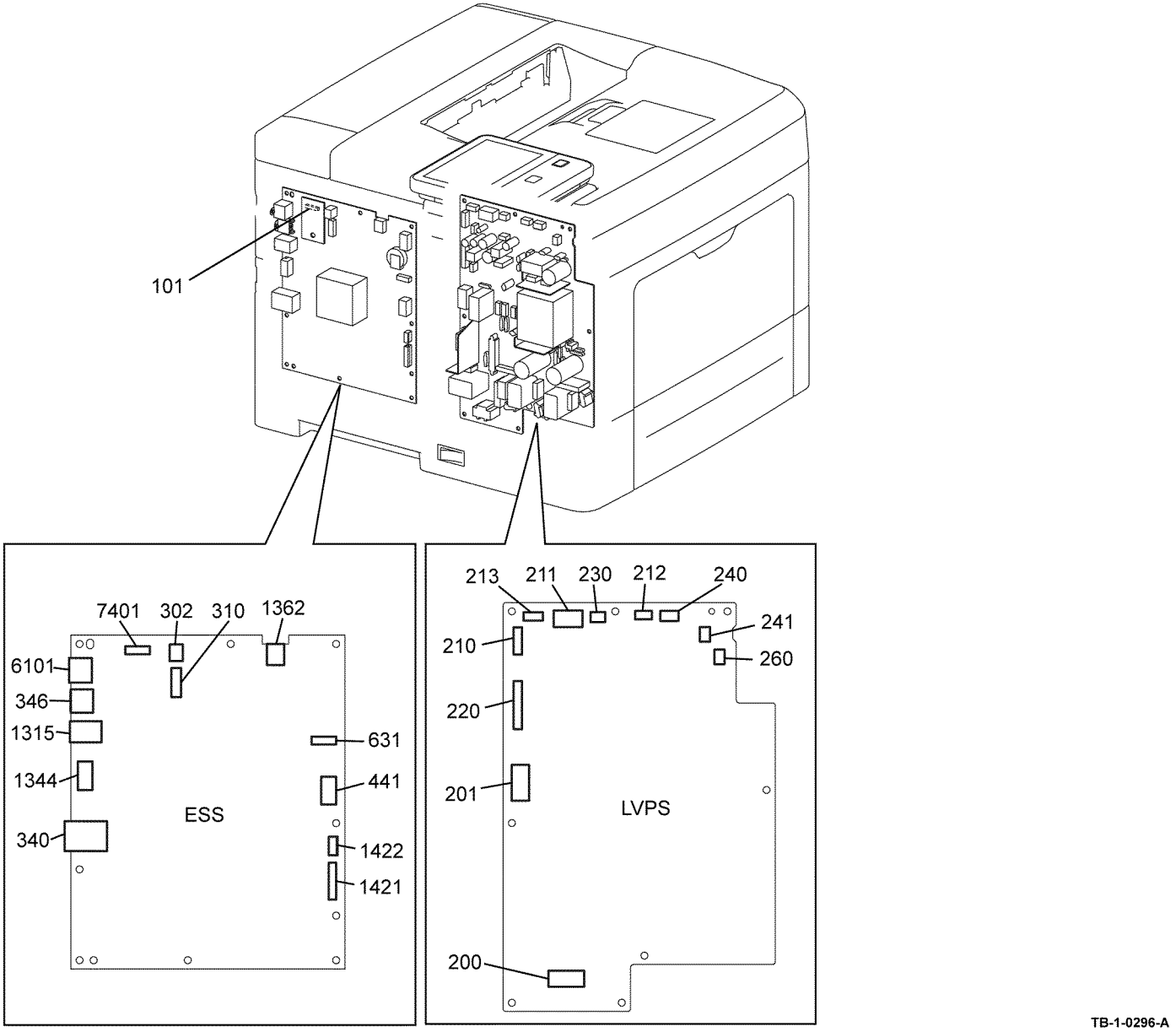

Figure 7 ESS and LVPS

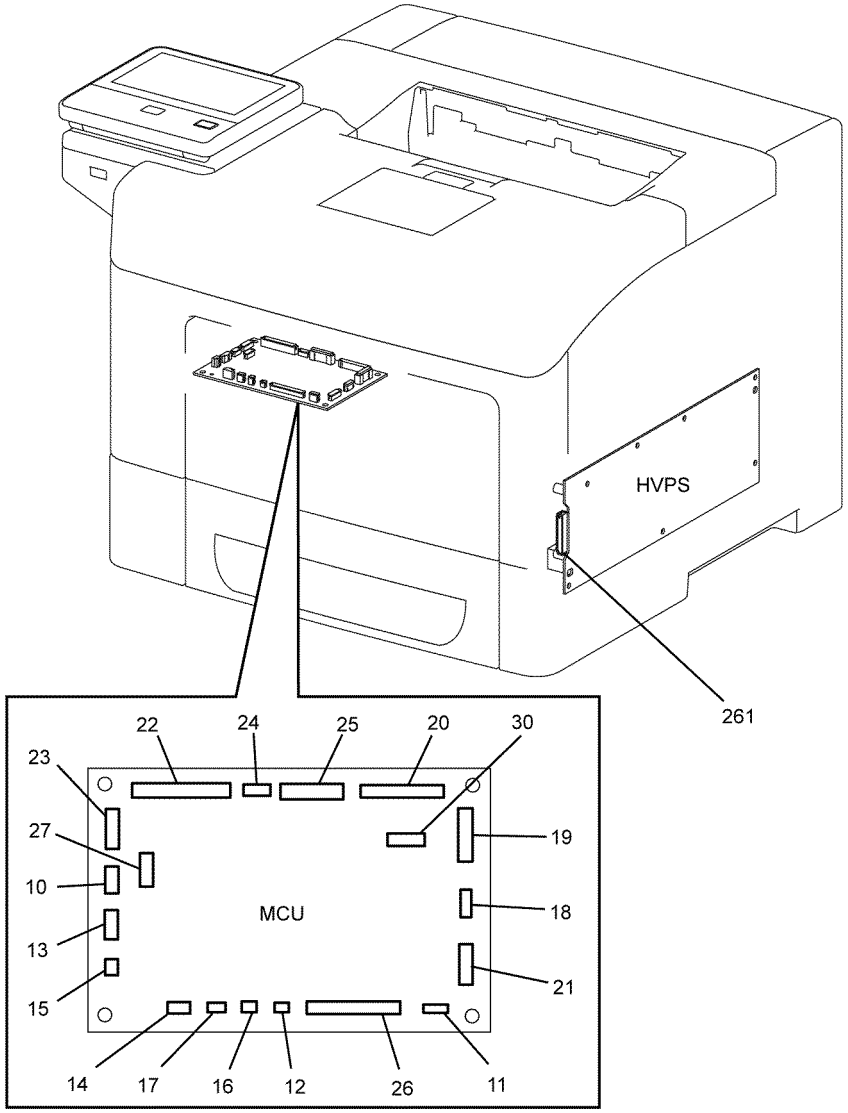

TB-1-0297-A

Figure 8 MCU

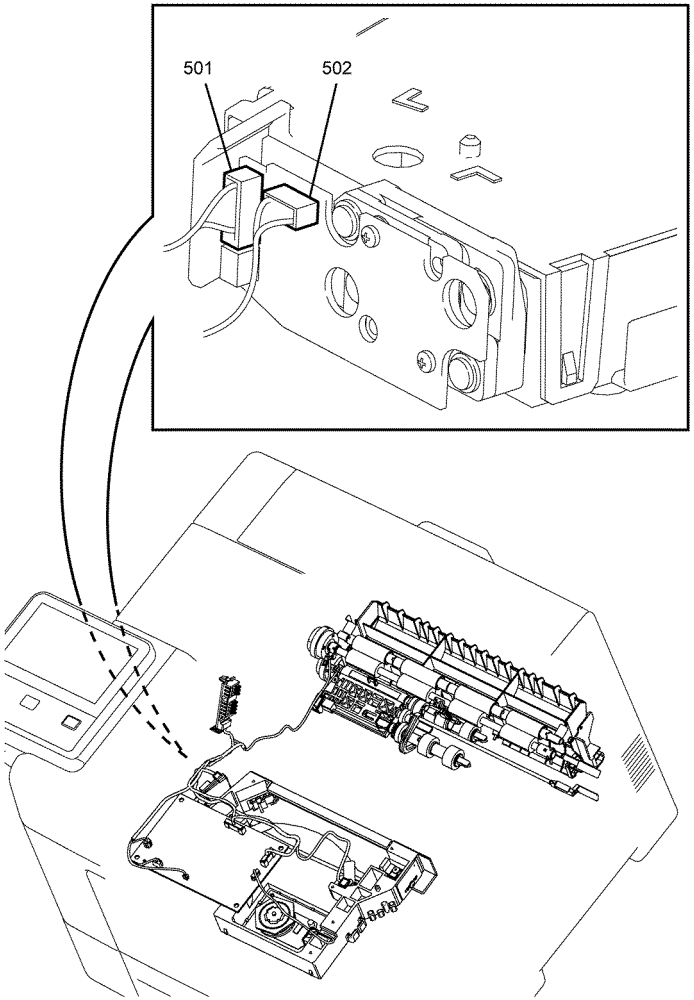

TB-1-0298-A

Figure 9 ROS

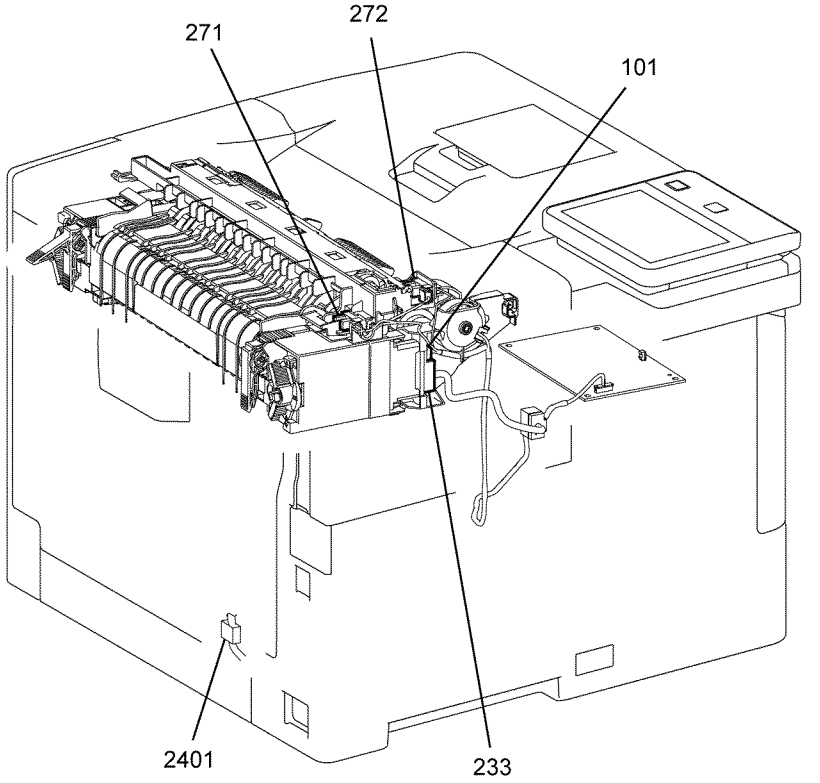

TB-1-0299-A

Figure 10 Fuser, Drive

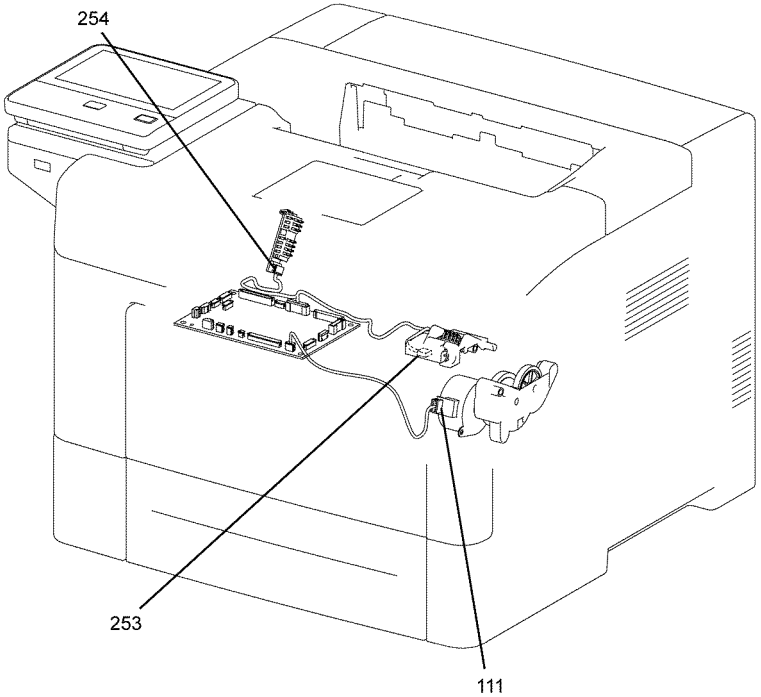

TB-1-0300-A

Figure 11 Xerographics

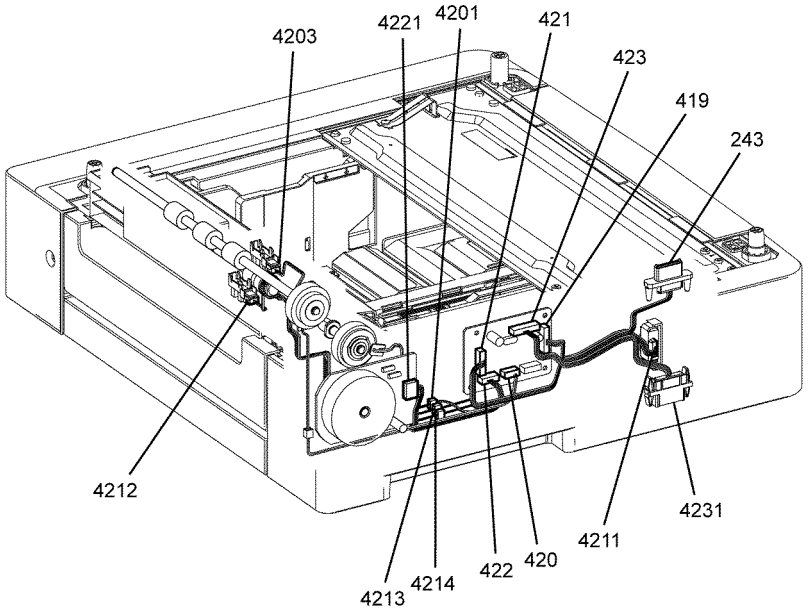

TB-1-0301-A

Figure 12 Option Feeder

Wiring Diagrams

Wiring diagrams are an aid to trace wiring faults. Wiring diagrams are used to complement the circuit diagram in the relevant RAP.

Refer to General Wiring Diagrams for a list of the general wiring diagrams which provide an overview of the machine components and their connections.

Refer to Subsystem Wiring Diagrams for a list of wiring diagrams that show more detail on individual subsystems and their connections.

General Wiring Diagrams

- B405 Power, Drive, Fusing, Controller, ROS, Xerographics/HVPS Interconnection Diagram, Wiring Diagram 1.
- B400 Power, Drive, Fusing/Exit, Controller, ROS, Xerographics/HVPS Interconnection Diagram, Wiring Diagram 2.
- B405 only Scanner, Wiring Diagram 3.
- B400 and B405 Option Feeder, Wiring Diagram 3.

Subsystem Wiring Diagrams

- B405 Power Regulation and Distribution, Wiring Diagram 4.
- B400 Power Regulation and Distribution, Wiring Diagram 5.
- Drive, Wiring Diagram 6.
- ROS, Wiring Diagram 7.
- Xerographics/HVPS, Wiring Diagram 8.
- Fuser/Exit, Wiring Diagram 9.
- B405 Controller, Wiring Diagram 10.
- B400 Controller, Wiring Diagram 11.
- B405 only Scanner, Wiring Diagram 12.
- Option Feeder, Wiring Diagram 13.

Wiring Diagram 1 Component Interconnection (B405)

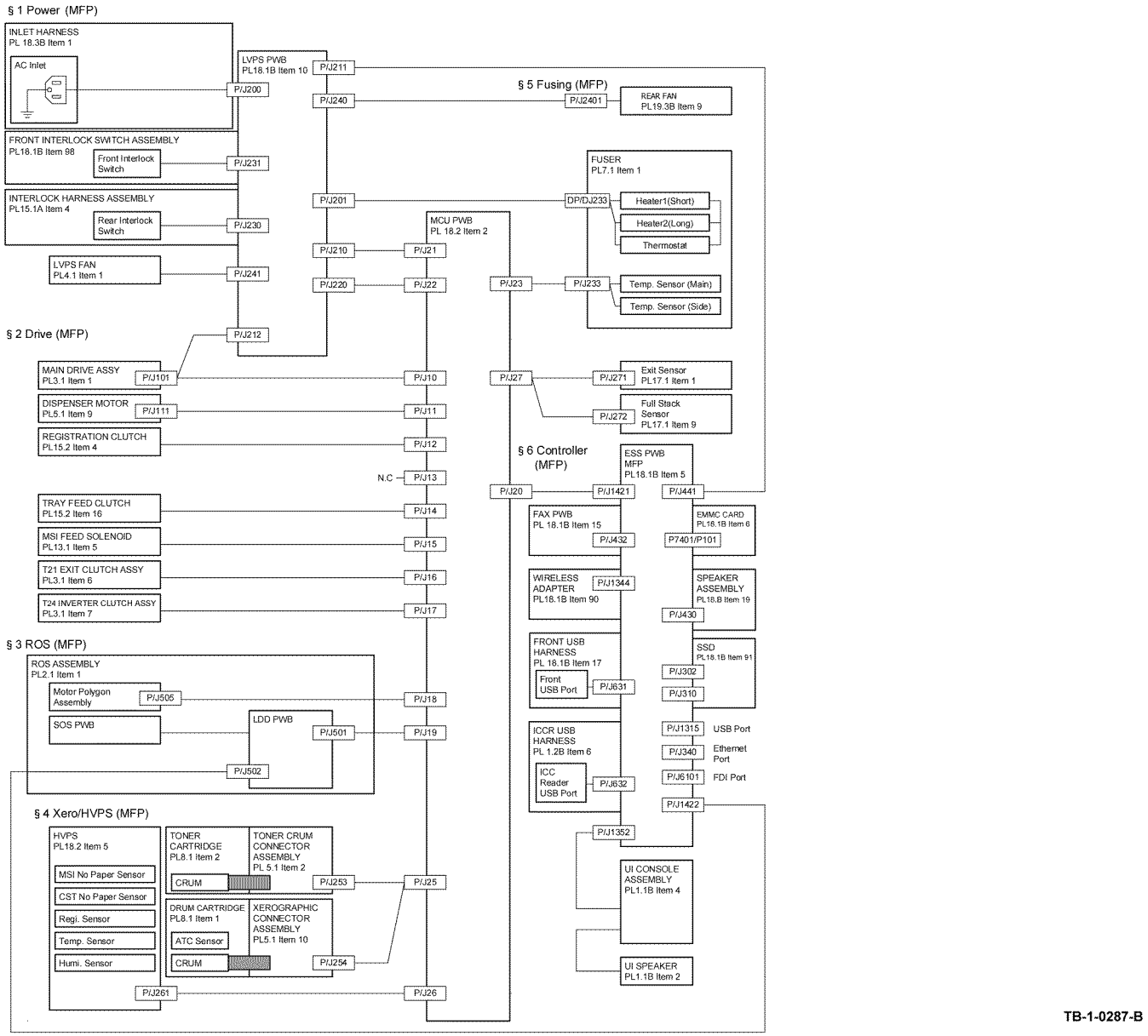

Figure 1 Wiring Diagram 1

Wiring Diagram 2 Component Interconnection (B400)

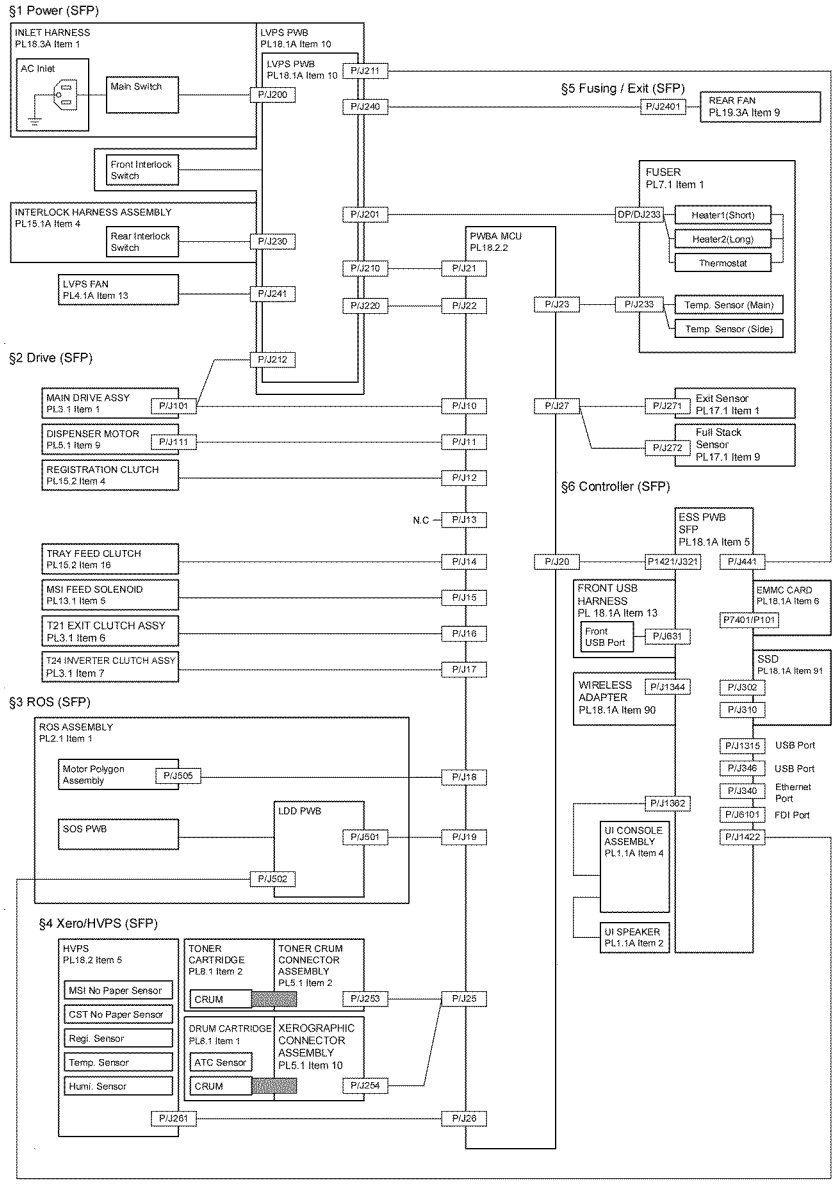

Figure 2 Wiring Diagram 2

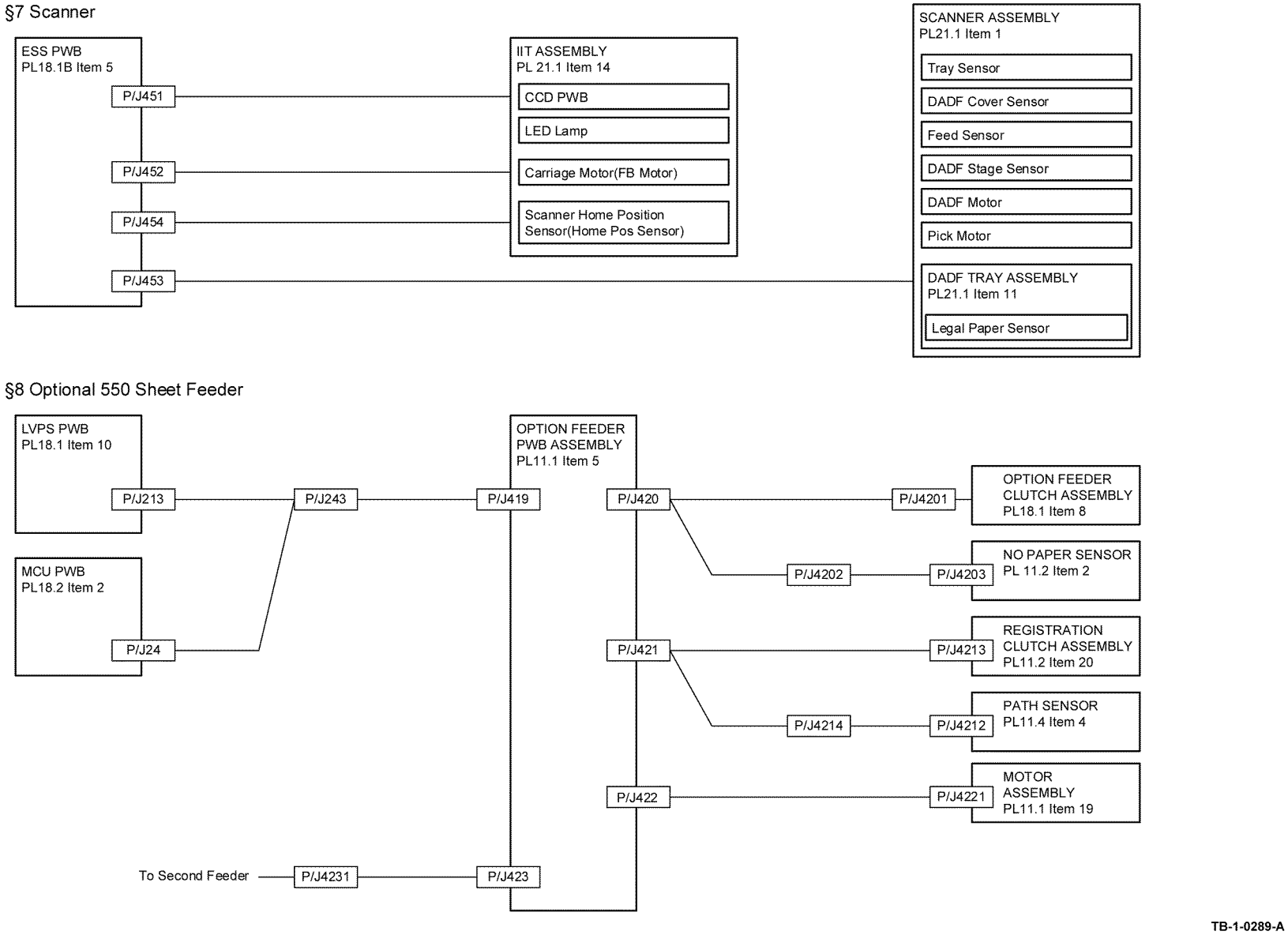

Figure 3 Wiring Diagram 3

Wiring Diagram 4 Power Regulation and Distribution (B405)

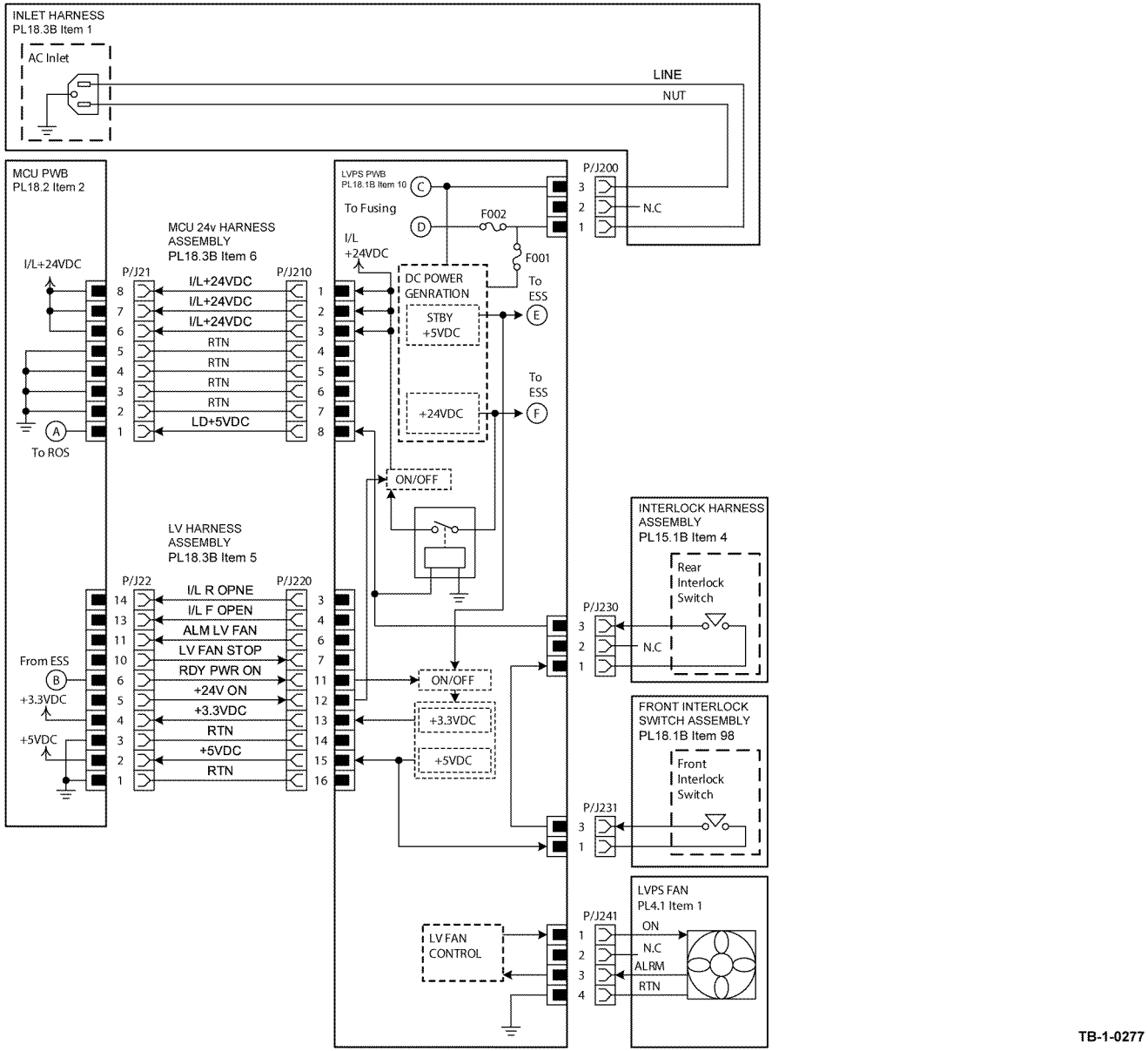

Figure 4 Wiring Diagram 4

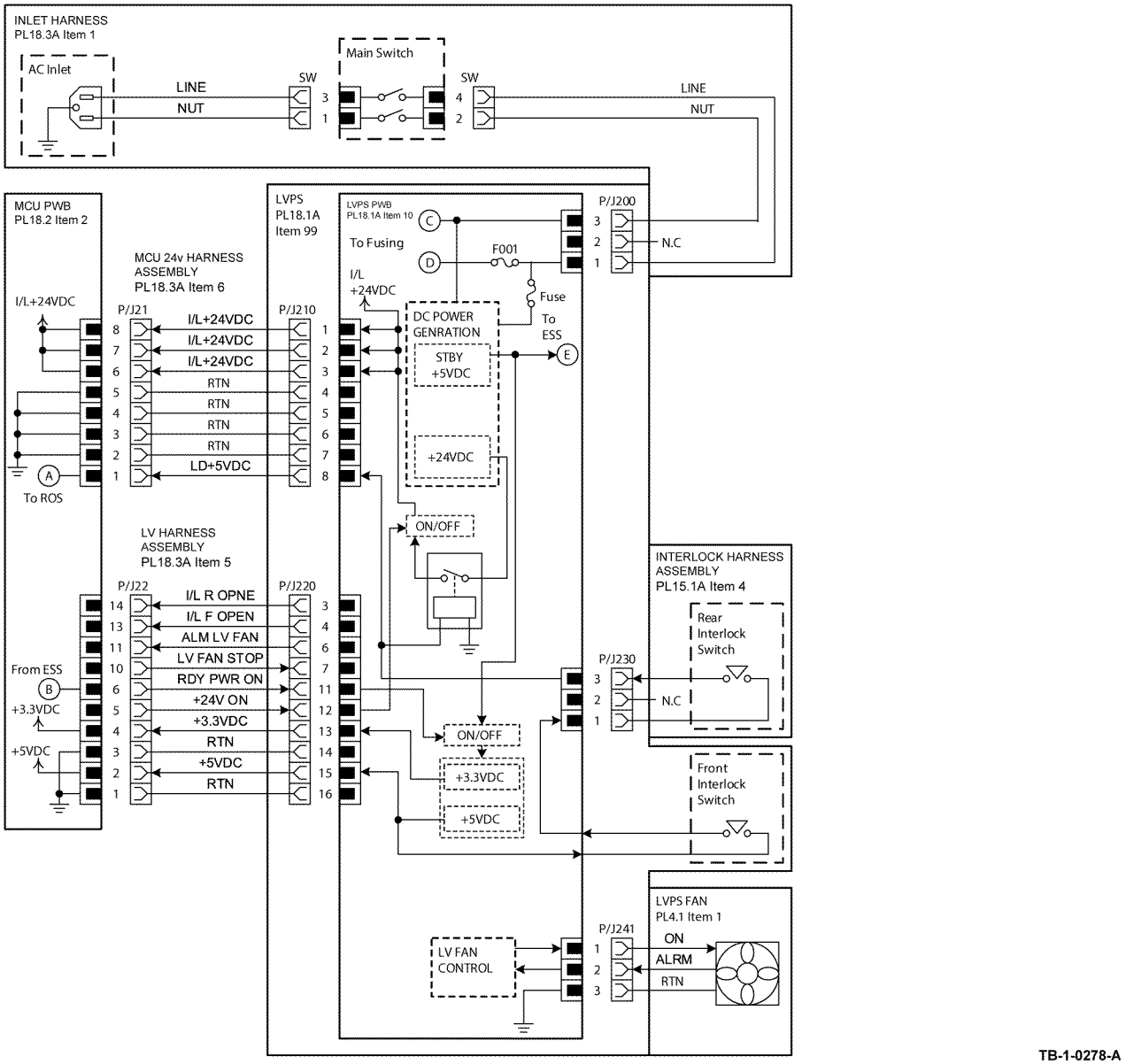

Figure 5 Wiring Diagram 5

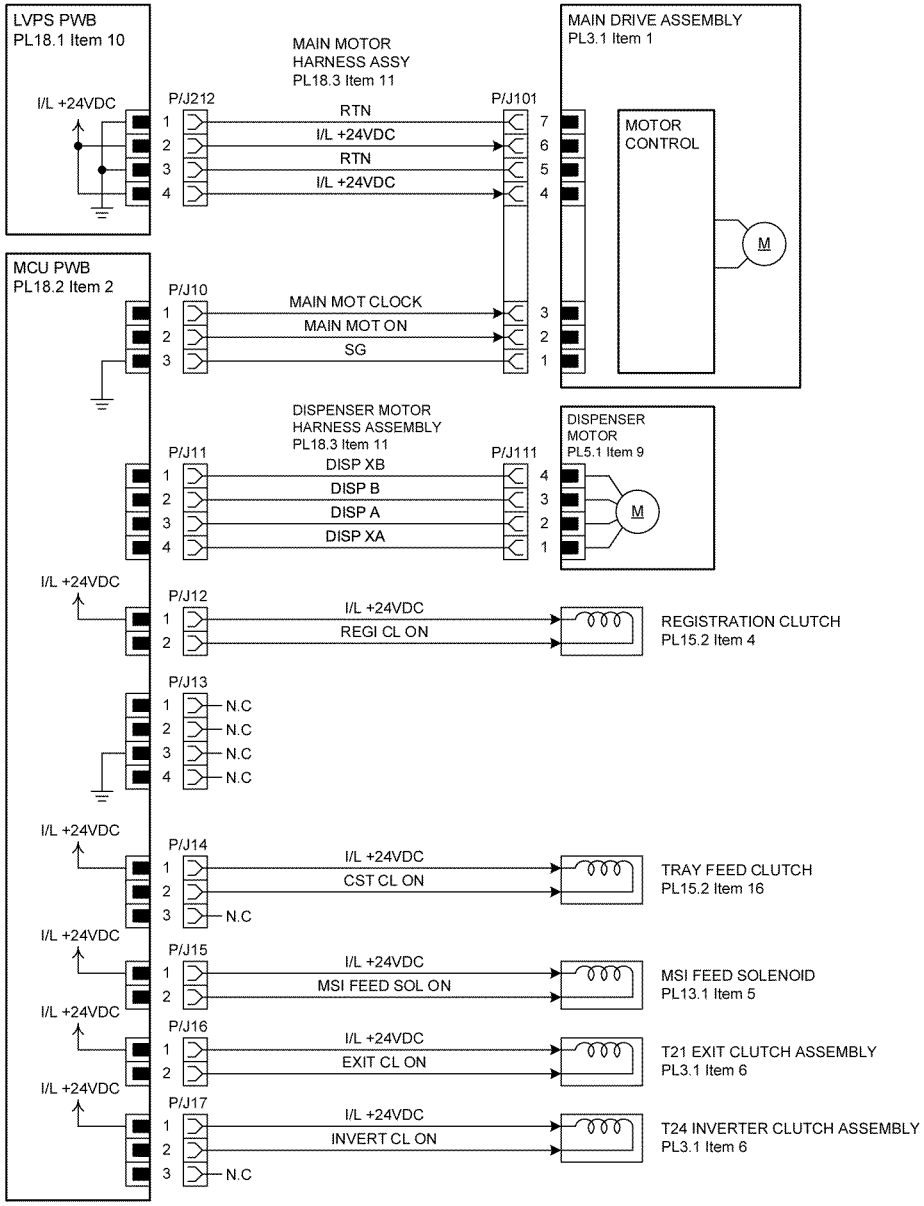

Figure 6 Wiring Diagram 6

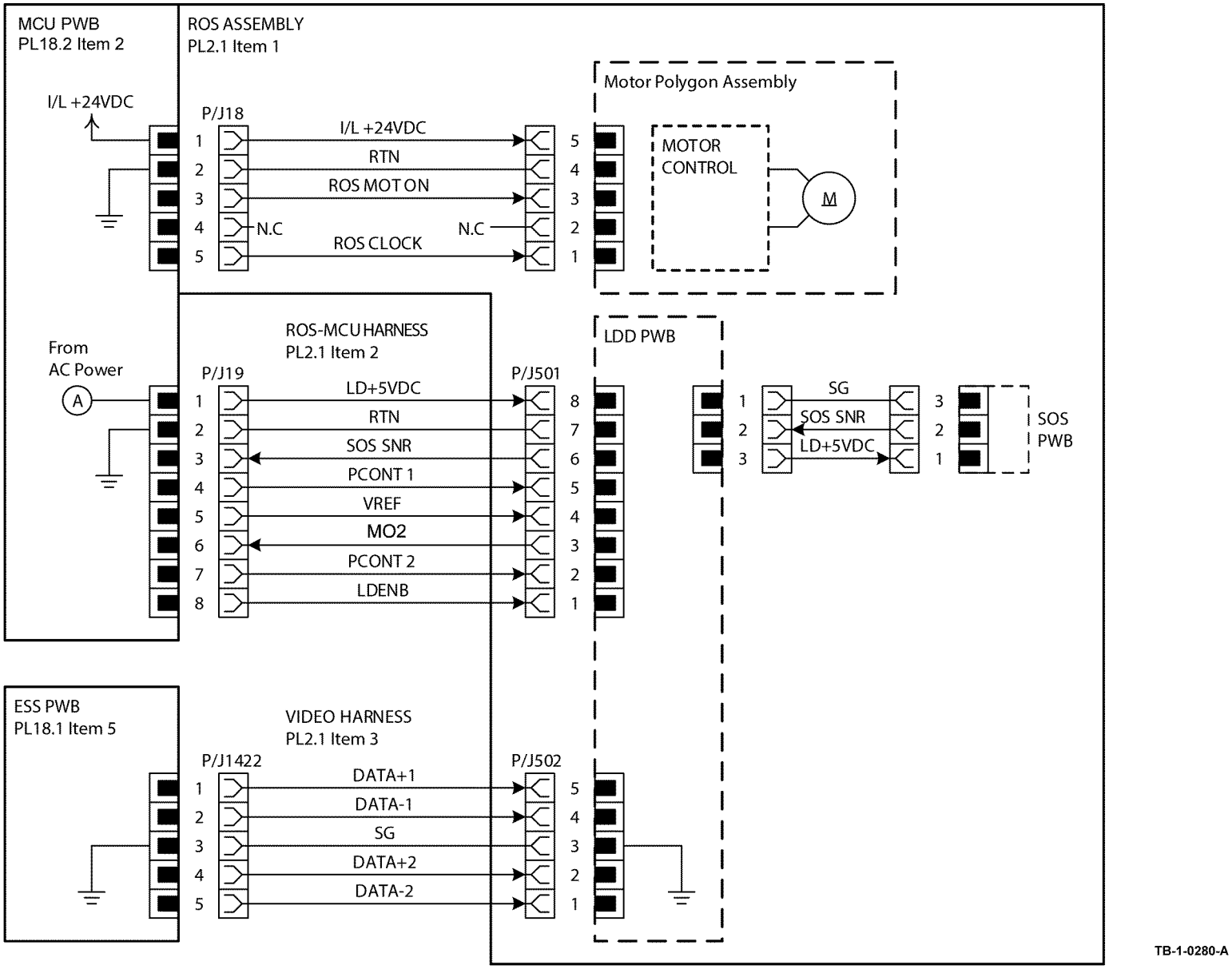

Figure 7 Wiring Diagram 7

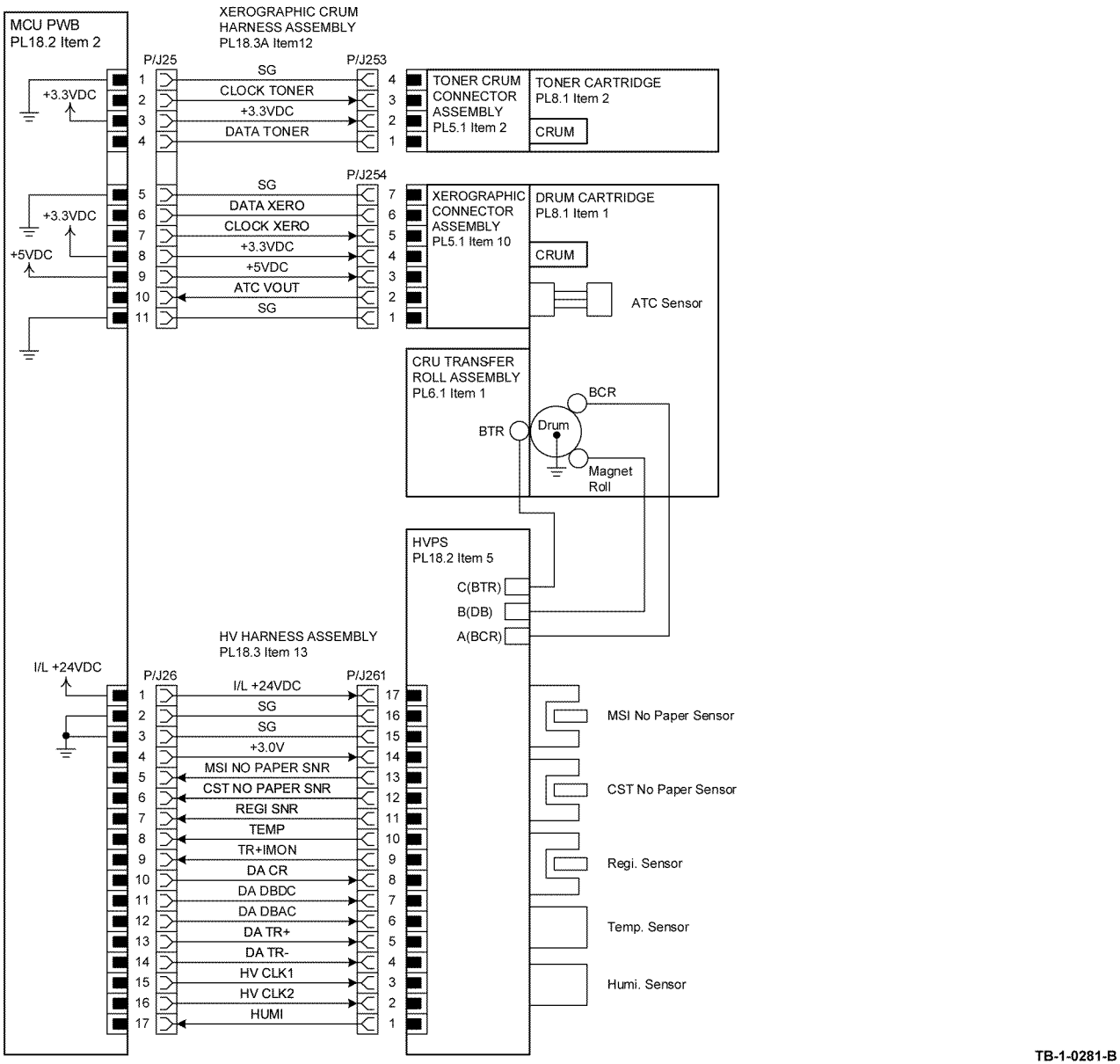

Figure 8 Wiring Diagram 8

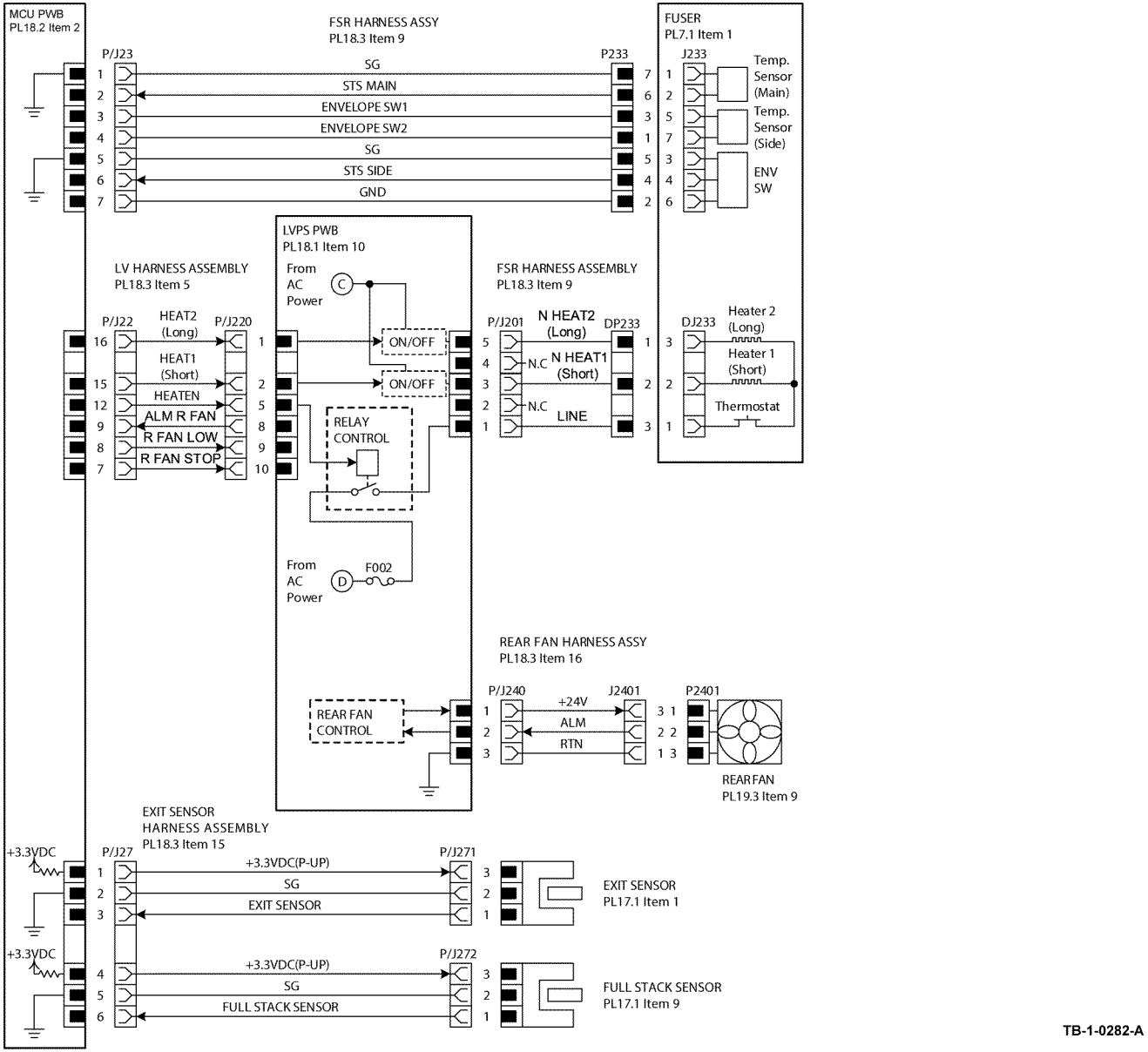

Figure 9 Wiring Diagram 9

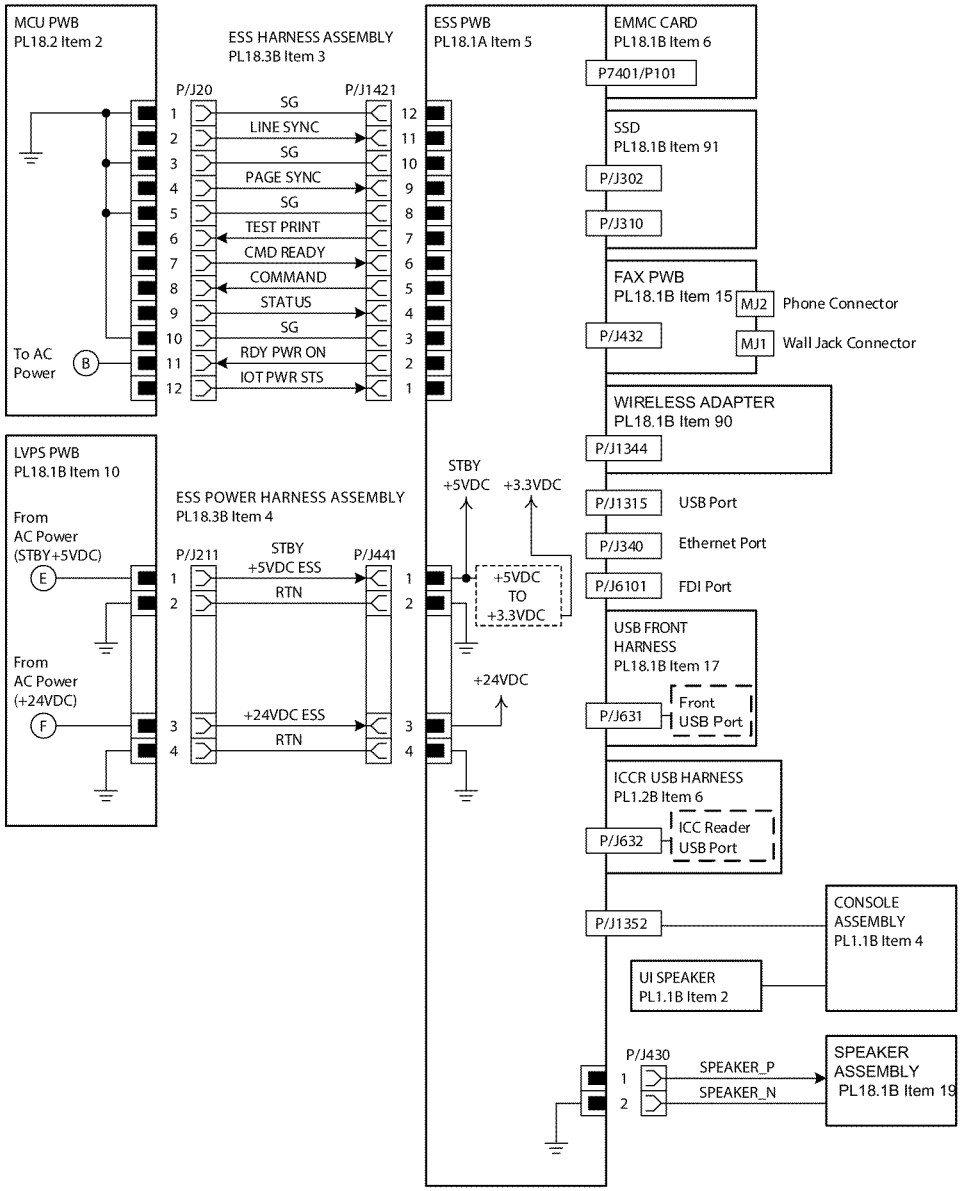

Figure 10 Wiring Diagram 10

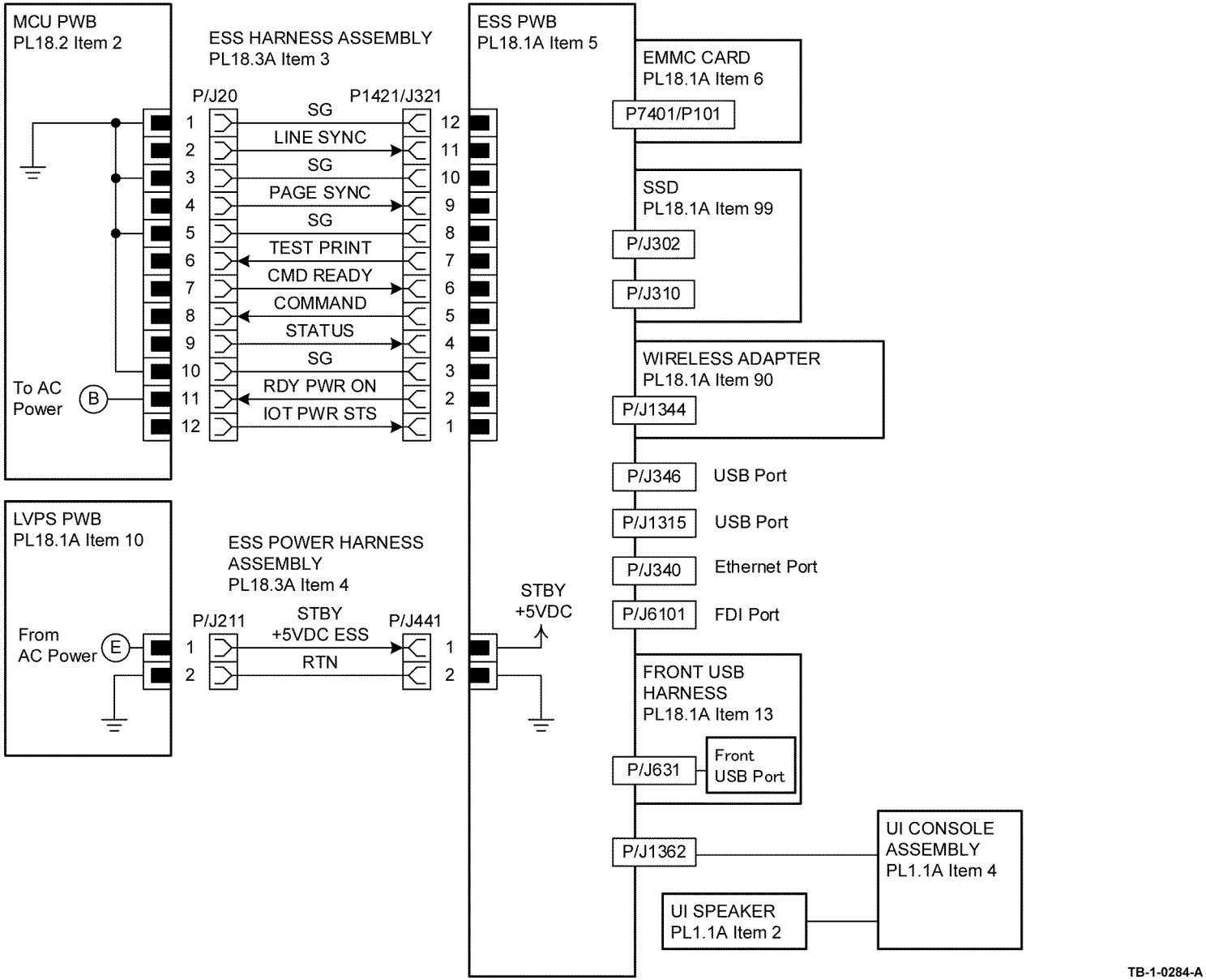

Figure 11 Wiring Diagram 11

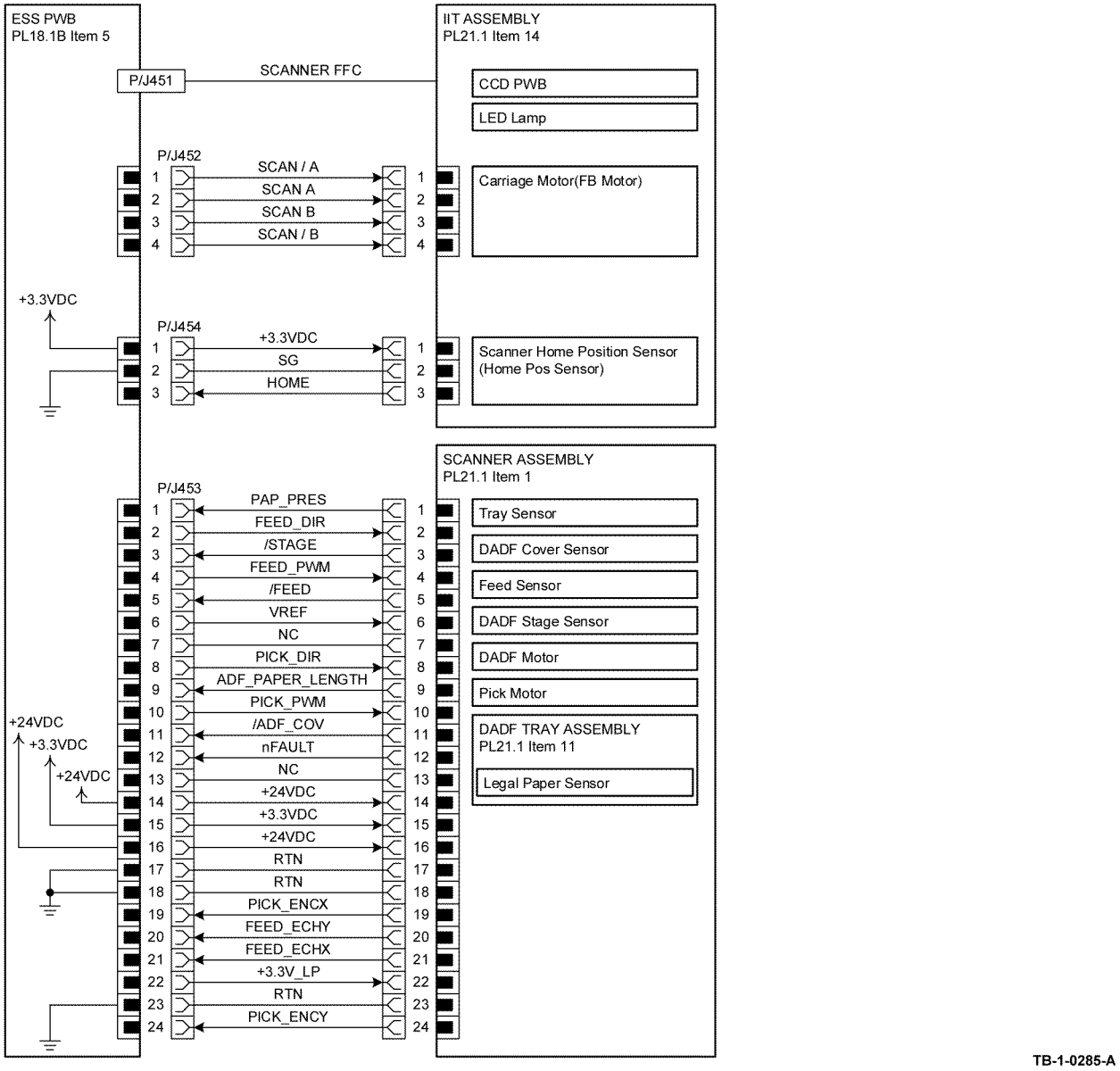

Figure 12 Wiring Diagram 12

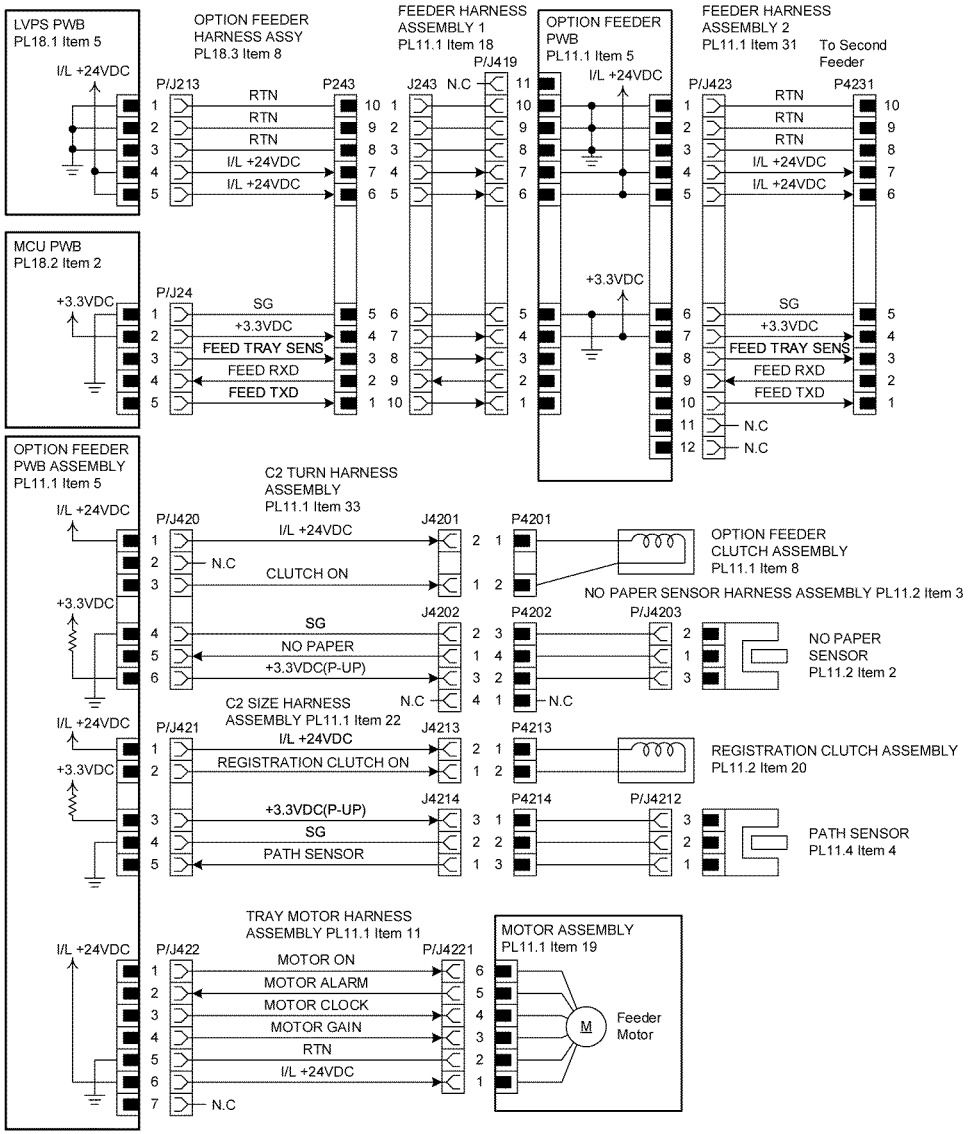

Figure 13 Wiring Diagram 13

8 Principles of Operation

Printing Process 8-3
Functions of Scanner Assembly 8-8
Paper Path 8-9
Functions of Major Functional Components 8-13
Data Flow 8-22
Operation Modes 8-23
Control 8-24
Drive Transmission Route 8-25
Telephone System 8-28
Telephone Call Connection Mechanism 8-31
Fax System (Overview) 8-33
Fax Unit Mechanisms 8-34
Fax Standards (ITU-T Recommendations) 8-35
Near Field Communication (NFC) 8-36

Printing Process

Summary of Printing Process

This printer is a xerography-based, black and white laser printer. The xerographic system consists of the following basic seven steps in which a toner image is formed on the drum, and then transferred and fused onto the paper. Refer to Figure 1.

1. Charging. The drum surface is charged with electricity.
2. Exposure. An image is formed by exposing the drum surface to laser light.
3. Development. The image on the drum surface is developed with toner.
4. Transfer. The toner image on the drum is transferred onto the paper.
5. Neutralization/Removal. The paper is removed from the drum surface.
6. Fusing. The toner on the paper is fixed by heat and pressure.
7. Cleaning. The drum is cleaned.

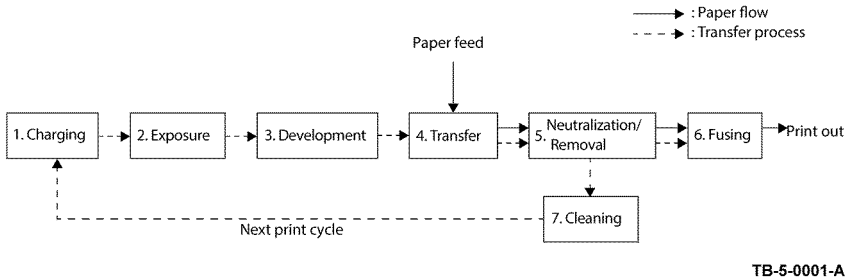

Figure 1 Xerographic process

As the rotating drum surface goes through the steps of charging, exposure, development, transfer, removal, and cleaning, a toner image is formed on the drum surface and is transferred onto the paper. As the paper is fed by the feeding mechanism through the steps of transfer, removal, and fusing, the toner image is transferred from the drum surface onto the paper, and then is fused.

The outline of the printing process is shown in Figure 2.

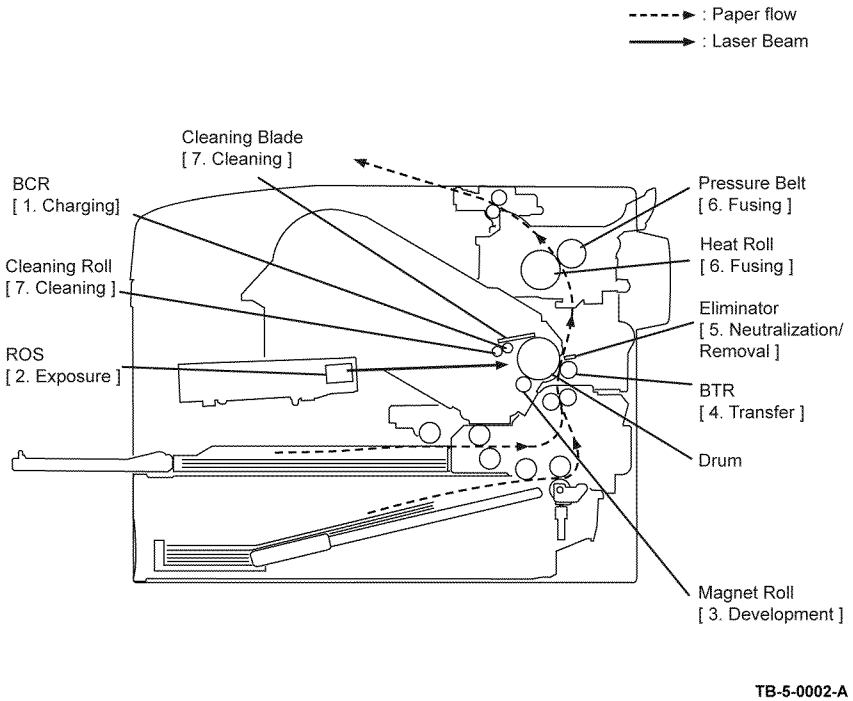

Figure 2 Printing process

Charging

During the charging process, the surface of the drum rotating at a constant speed is uniformly charged with negative polarity by the discharge from the bias charge roll (BCR). Refer to Figure 3.

- The BCR is kept in contact with the drum and rotates following the rotations of the drum. The BCR is a conductive roll that uniformly and negatively charges the drum surface with the negative voltage applied by the HVPS.
- The drum surface is uniformly and negatively charged with DC bias voltage. The drum surface consists of a photoreceptor (which is an insulator in the dark and a conductor in the light) backed with a conductor.
- The cleaning roll contacts with the BCR to remove the toner from its surface.

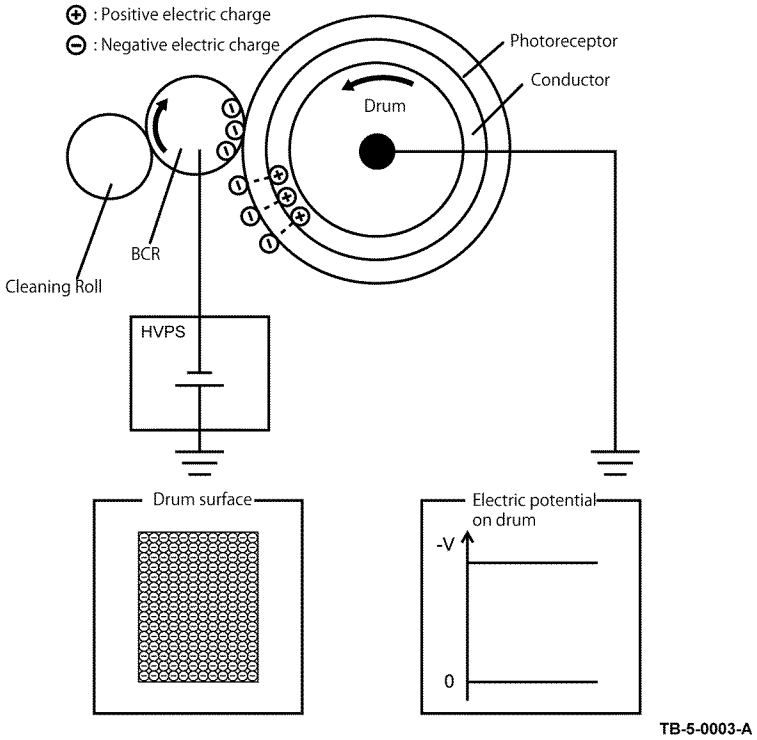

Figure 3 Charging

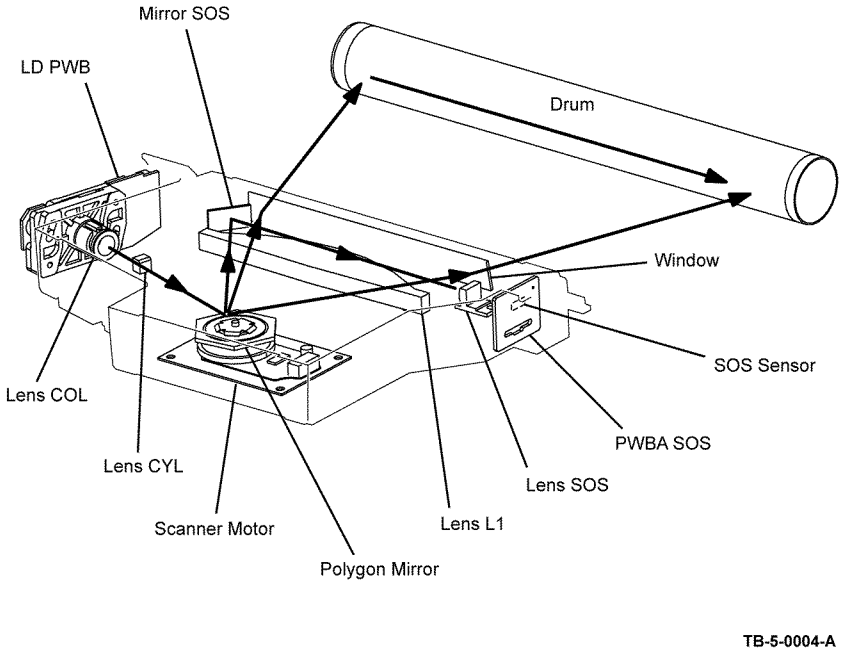

Figure 4 Exposure

Exposure

The exposure process forms an invisible electrostatic latent image on the negatively charged drum surface by scanning it with laser light. Refer to Figure 4

- The laser light is emitted from the laser diode (LD) to the polygon mirror via the two lenses. The laser light reflected from the polygon mirror goes through the drum through the lens L1 and the window.
- The polygon mirror has six reflecting mirror faces and rotates driven by the scanner motor. The changing angle of the reflecting mirror surfaces allows the incoming laser light to scan the drum from end to end. One reflecting mirror is used to scan one line.
- When one line of scanning ends, the laser light reflected from the polygon mirror enters the SOS mirror and is reflected to the SOS sensor. The SOS sensor generates a scan reference signal in response to the detection of laser light. This signal is used to time the start of laser scanning to the start of image writing.
- The laser light is illuminated according to the printing data (image data) output from the printer controller. Only the points on the drum surface corresponding to the pixels (minute points composing characters of pictures) of the printing data are illuminated by laser light (the laser diode turns on at the area to be illuminated with toner, and turns off at the are not to be developed). The areas on the drum illuminated with the laser light become conductive. This allows the negative charge on the drum surface to flow to the positive side and to cancel out the positive charge, lowering the potential on the drum surface. This low-potential area becomes the electrostatic latent image. Refer to Figure 5.

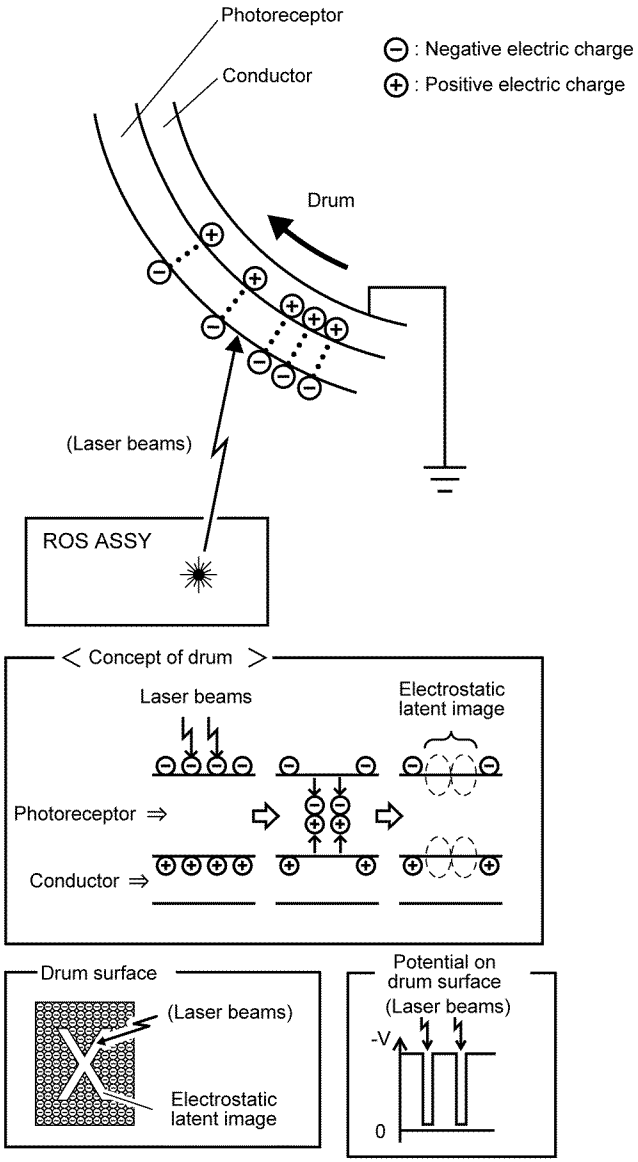

TB-5-0005-A

Figure 5 Latent image

Development

The development process makes a visible image appear on the drum surface by electrically attracting toner particles to the electrostatic latent image.

Toner Feeding

- The toner in the toner cartridge is fed into the developer unit by the auger driven by the dispense motor. Refer to Figure 6.

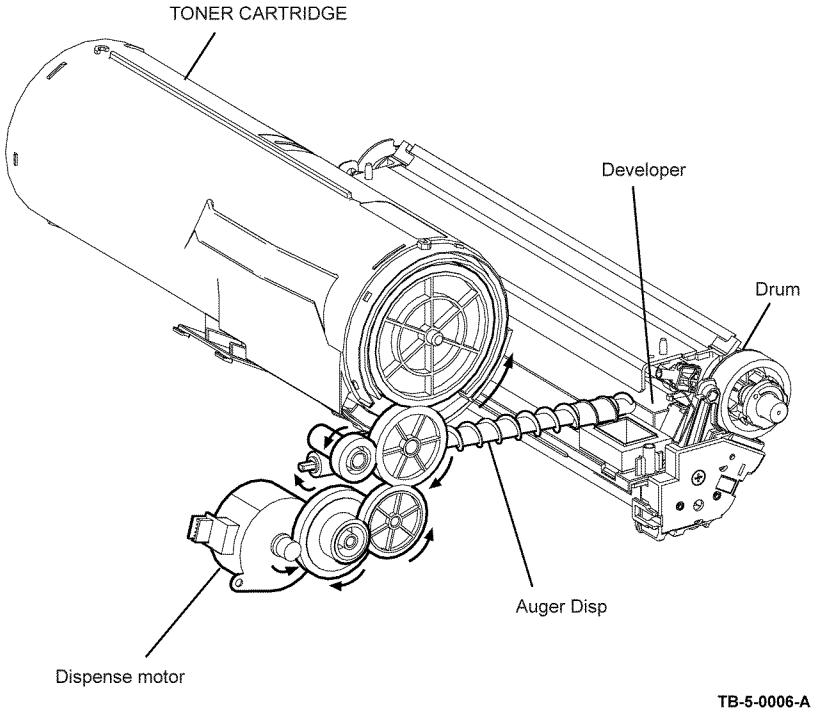

TB-5-0006-A

Figure 6 Toner feeding

Development

- In the developer section, the incoming toner is mixed with the existing developer (toner/carrier mixture) by the auger, and then supplied to the magnet roll located near the drum surface. The toner and carrier are charged by friction due to agitation (toner in negative, carrier in positive), and they attract each other electrically. The carrier, due to its magnetic properties, is attracted to the magnetized magnet roll, and then uniformly leveled by the trimmer rod.

- The entire surface of the magnet roll is covered by a thin conductive sleeve. The developing bias (DB) voltage is supplied to this conductive sleeve from the high voltage power supply (HVPS). The DB voltage is a DC voltage. The DC voltage keeps the magnet roll at a constant negative voltage against the photoreceptor layer of the drum. Therefore, at the area where the negative electric charge on the drum surface does not decrease, the potential is lower than that of the magnet roll, while the potential is higher than that of the magnet roll at the area where the negative charge on the drum surface decreases. Thus, the negatively charged toner is attracted only to the portions of the drum surface where the negative charge has decreased below that of the magnet roll (electrostatic latent image), forming an image on the drum. Once the toner is deposited on the drum, the toner-attracting force of the corresponding portion decreases because the increase of negative charge lowers the potential at that portion. Refer to Figure 7.

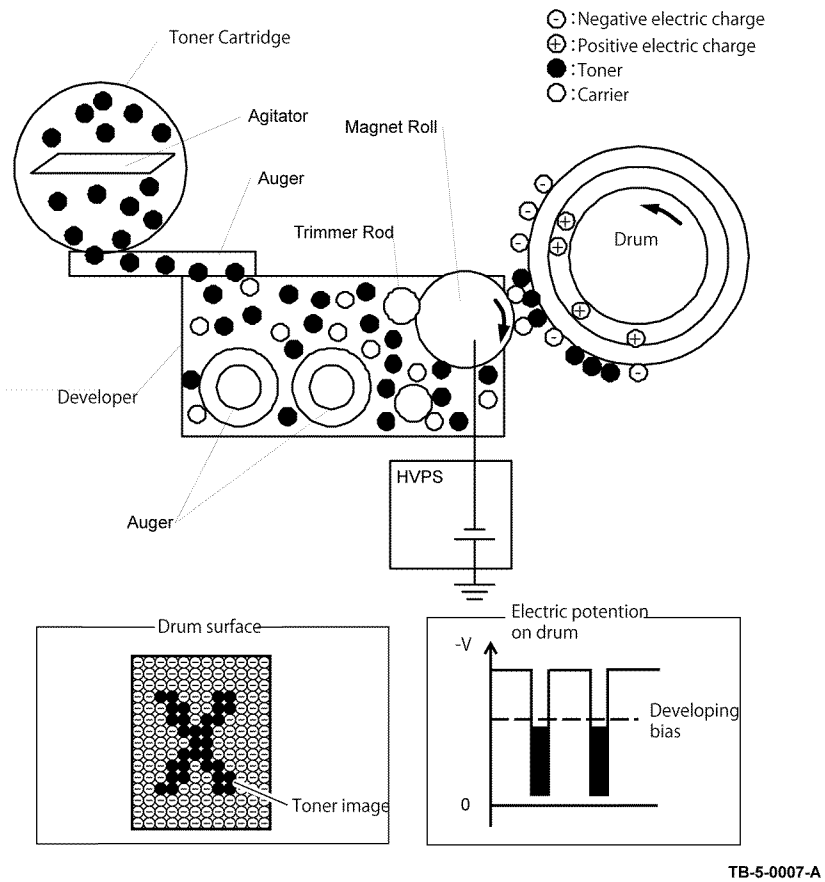

Figure 7 Development

Transfer

During the transfer process, the toner image formed on the drum surface is transferred to the paper via the bias transfer roll (BTR).

- The BTR is a conductive roll, which is located in contact with the drum and is supplied with high voltage from the HVPS. When the paper moves from the BTR to the drum, the BTR applies positive charge to the backside of the paper. The toner image on the drum surface is transferred from the drum to the paper, attracted by the positive charge of the paper backside. The paper is attracted to the drum surface because the negative charge induced in the conductive layer of the drum attracts the positive charge on the paper backside. Refer to Figure 8.

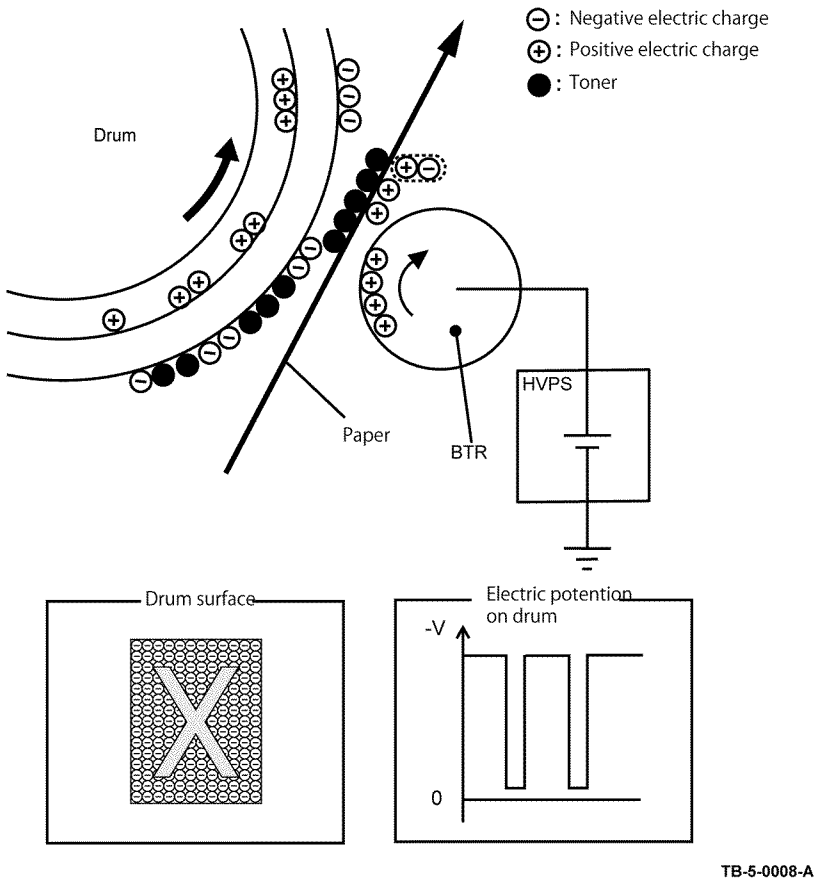

Figure 8 Transfer

Neutralization/Removal

During the neutralization/removal process, the charge on the paper is neutralized by the eliminator.

This also eliminates the force that attracts the paper to the drum surface, allowing the paper to peel off from the drum due to the elasticity of its own.

- The eliminator neutralizes the charge to prevent the toner on the paper from spreading over the surrounding metal surfaces. The eliminator is a metal sheet that is held at the ground level. It neutralizes the positive charge applied during the transfer process by applying negative charge to the backside of the paper. Refer to Figure 9.

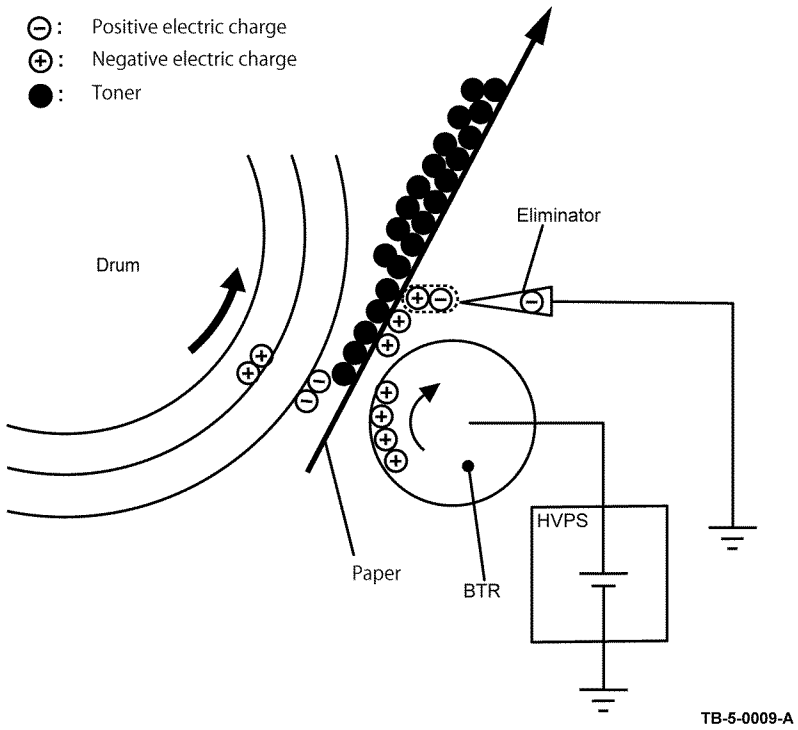

Figure 9 Neutralization/removal

Fusing

During the fusing process, toner is fixed onto the paper by heat and pressure.

- The toner particles are melted by the heat roll heated by the heater lamp, and fused onto the print medium by the pressure between the heat roll and the pressure belt.
- The pressure belt friction-driven by the heat roll nips the paper against the heat roll using the pressurizing mechanism contained in the pressure belt. Refer to Figure 10.

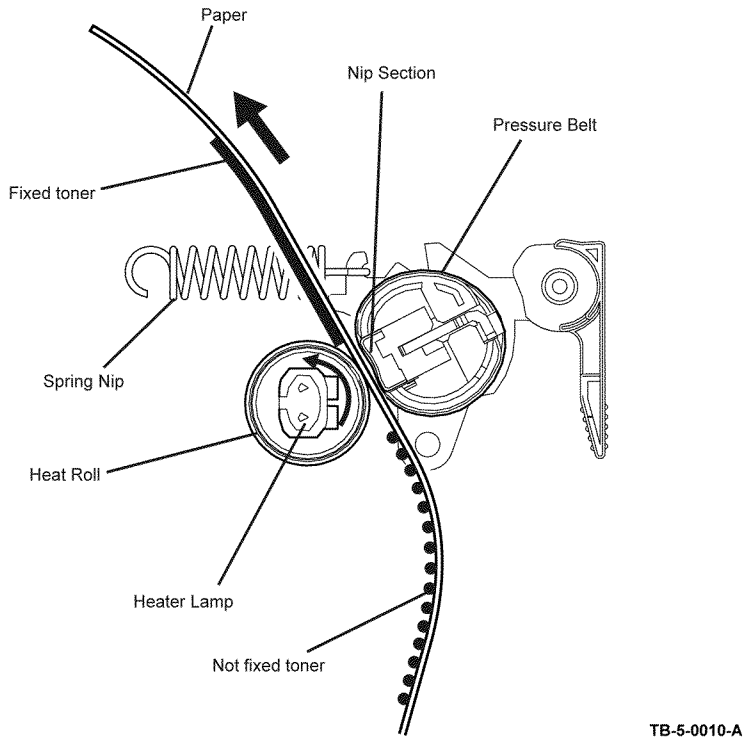

Figure 10 Fusing

Cleaning

During the cleaning process, excess toner is removed from the drum and BCR surfaces to eliminate the charge on the drum surface.

- Drum cleaning. The toner that was not transferred to the drum surface during the transfer process remains on the drum surface. To prevent the remaining toner on the drum surface from causing image quality defects during the subsequent process, the cleaning blade in contact with the drum scrapes off the remaining toner, and transports it to the waste toner collecting area.
- BCR cleaning. The cleaning roll, made of spongy material, contacts the BCR surface and scrapes off the remaining toner, and transports it to the waste toner collecting area.
- BTR cleaning. The excess toner deposited on the BTR during the transfer process contaminates the backside of the subsequent sheets. To prevent this, the HVPS sends negative high voltage (contrary to the transfer process) to the BTR to reverse-transfer the toner from the BTR to the drum. The cleaning blade in contact with the drum scrapes off the reverse-transferred toner from the drum, and transports it to the waste toner collecting area. Refer to Figure 11.

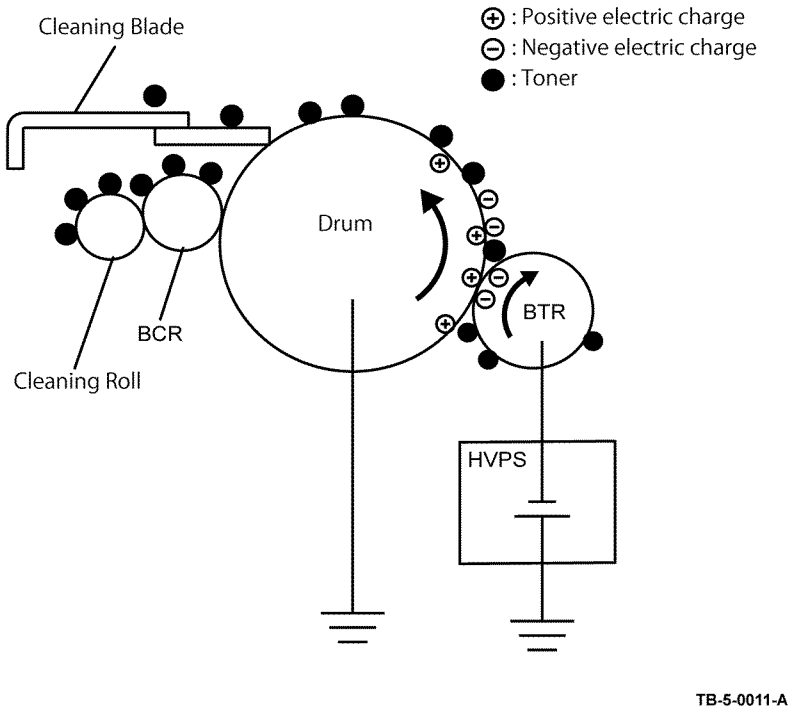

Figure 11 Cleaning

Functions of Scanner Assembly

Document Scanning

The scanner assembly consists of the image input terminal (IIT) and the duplex automatic document feeder (DADF). Document scanning is performed by the carriage assembly in the image input terminal.

Document Scanning at Platen (IIT)

The carriage assembly consists of the LED array for illuminating a document, the CCD image sensor for photo electronic converting image data, the mirrors and the lens.

By the drive from the carriage motor, the carriage assembly in the IIT moves at the shifting speed corresponding to the set magnification and irradiates the document by the LED array. The optical image of the document irradiated by the LED array is reflected by the multiple mirrors, passed through the lens, and then scanned by the CCD image sensor. Refer to Figure 1.

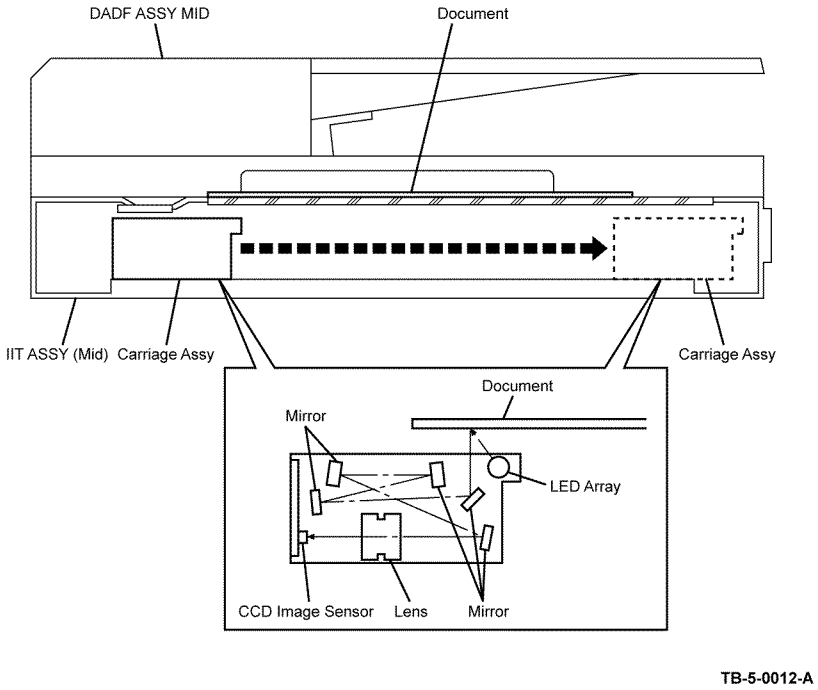

Figure 1 Platen scanning

Document Scanning at DADF

When the document being fed by the torque from the pick motor and DADF motor at the speed corresponding to the set magnification passes the scanner home position (constant velocity transport (CVT)) of the carriage assembly in the IIT, allowing the reflected image to be read by the CCD image sensor through the rod scope. Refer to Figure 2.

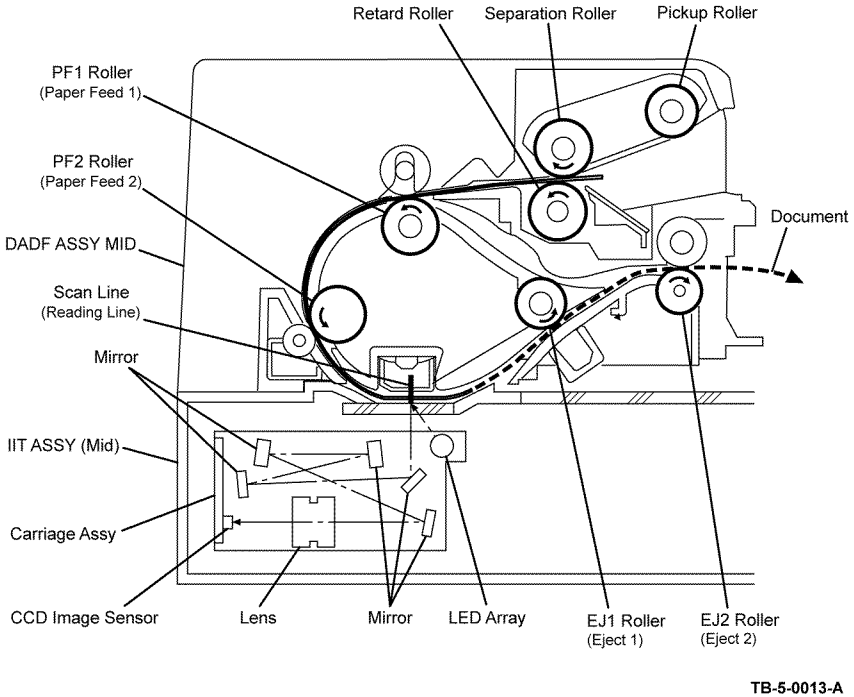

Figure 2 DADF scanning

Paper Path

Paper Path Layout

Figure 1 shows the paper path layout and the paper path-related components of the configuration with the optional 550 sheet feeder.

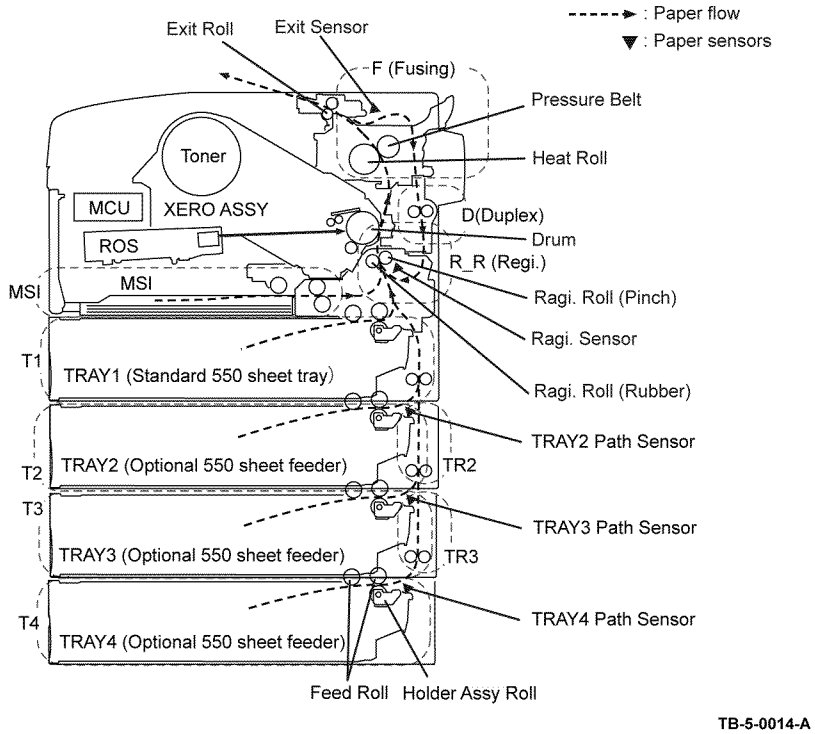

Figure 1 Paper path

Feeding from the MSI

When a sheet is fed from the multi sheet inserter (MSI), the MSI feed solenoid is energized. When the MSI feed solenoid is energized, the stopper is released, and the nudger roll contacts the top sheet of the stack loaded in the MSI.

The feed roll and the nudger roll rotate driven by the main drive assembly, to feed the sheet to the position where it is nipped between the feed roll and the retard roll.

If multiple sheets are fed together, the friction with the stopper sheet and the retard roll prevents the bottom sheets from going any further, allowing only the top sheet to pass. Refer to Figure 2.

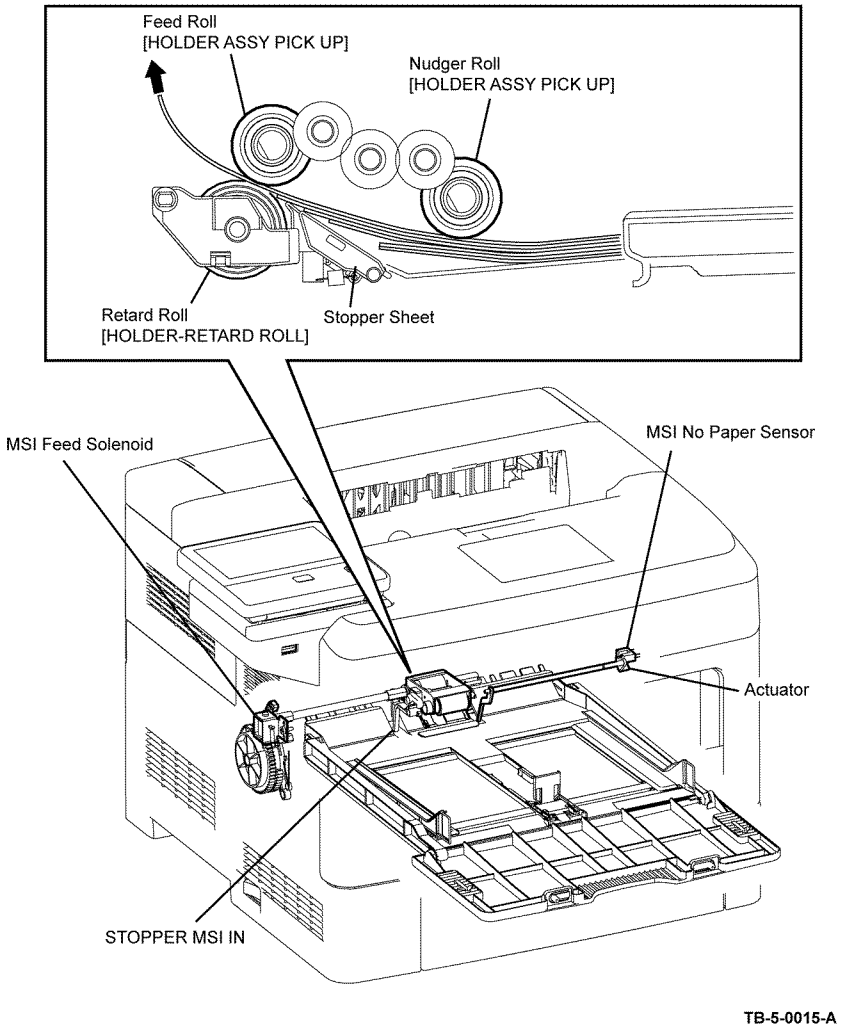

Figure 2 MSI feed

Feeding from the Tray

Sheets loaded in the tray are fed by the nudger roll to the position where it is nipped between the feed roll and the retard roll. The retard roll separates the sheets by the rotational friction obtained by being pressurized to the feed roll by the spring from below. If multiple sheets are fed together, the retard roll is braked to stop by the built-in torque limiter, and prevents, by friction, the bottom sheets from going any further, allowing only the top sheet to pass. The plate assembly bottom rises by the spring pressure as the sheet stack becomes thinner. Refer to Figure 3.

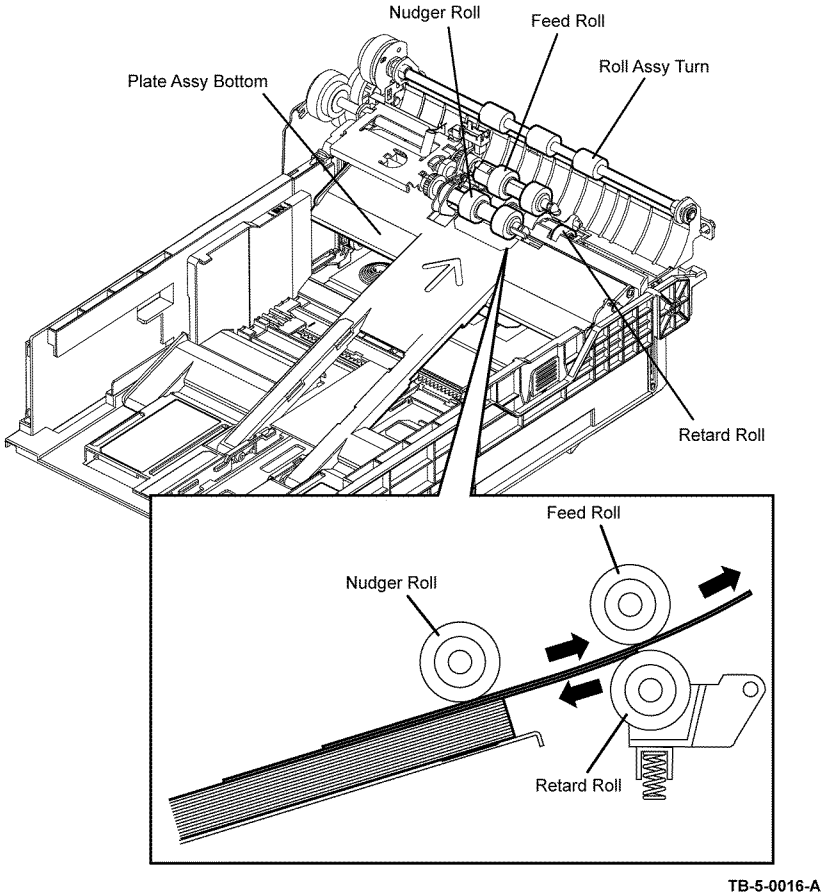

Figure 3 Tray feed

Registration

When a sheet is fed from the tray or MSI to the toner transfer section, the registration of the sheet may not be correctly maintained due to misalignment of lead edge in the tray or MSI.

To avoid this, the lead edge position needs to be adjusted at the registration section before the sheet is fed to the toner transfer section.

By thrusting the edge of the sheet coming out of the tray or MSI against the registration roll, the lead edge of the sheet is correctly adjusted. Refer to Figure 4.

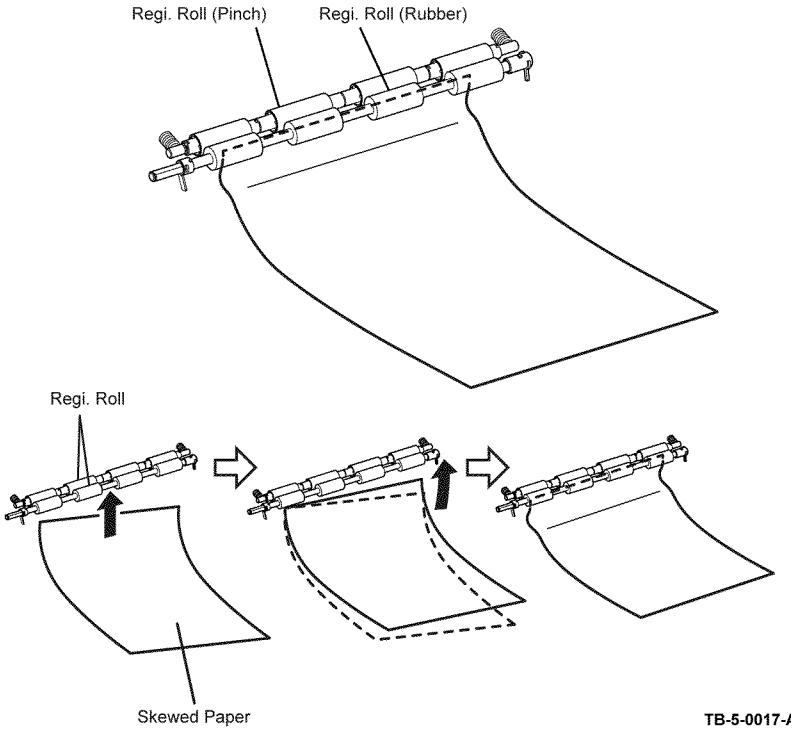

Figure 4 Registration

Transfer/Fusing/Exit

While the sheet that passed the registration section passes between the drum and the BTR that are driven by the main drive assembly, the toner image on the drum is transferred onto the sheet.

As the sheet is forwarded to the exit section, the toner image is fused onto the sheet surface by the heat roll that rotates driven by the main drive assembly.

At the exit, the torque from the main drive assembly is conveyed to the exit roll by energizing the exit clutch to forward the sheet to the exit direction. Refer to Figure 5.

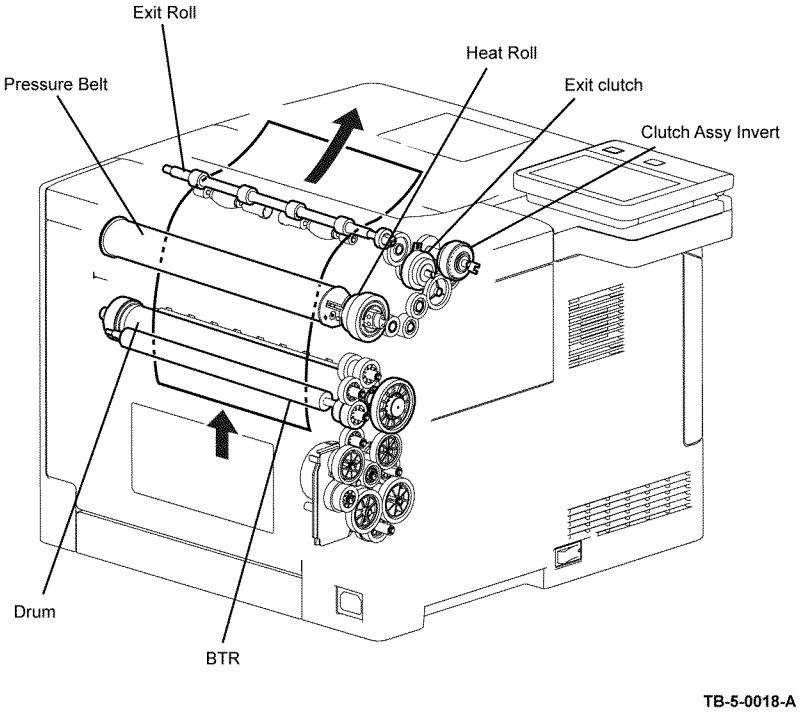

Figure 5 Exit

Duplex Path

After the printing of the side 1 is completed and the lead edge of the sheet passes the chute gate, the inverter clutch is energized and the exit roll rotates toward the duplex path. The chute gate lowers under its own weight, and the sheet is fed toward the duplex path.

The duplex roll rotates driven by the main drive assembly to feed the sheet to the registration position. Refer to Figure 6.

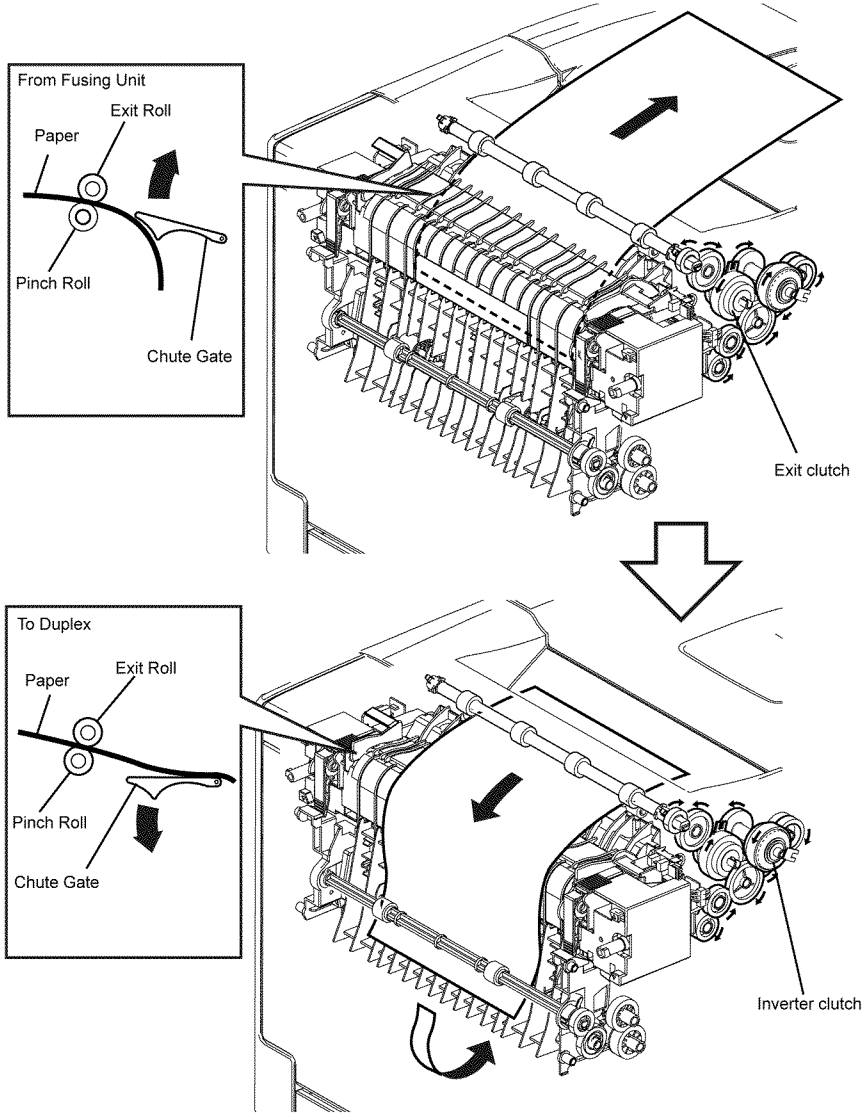

Figure 6 Duplex

DADF Paper Path (Simplex)

When the sheet feeding from the document feeder tray of the DADF starts, the pickup roller that rotate driven by the torque from the pick motor. The sheet is nipped between the separation roller and the retard roller while being fed into the DADF.

Inside the DADF, the sheet is fed by the paper feed 1 roller and paper feed 2 roller that rotates by the torque from the DADF motor to the scanner home (CVT) position in the carriage assembly, and is scanned.

After being scanned, the sheet is ejected to the document output tray of the DADF by the eject 1 roller and eject 2 roller that rotates by the torque from the DADF motor. Refer to Figure 7.

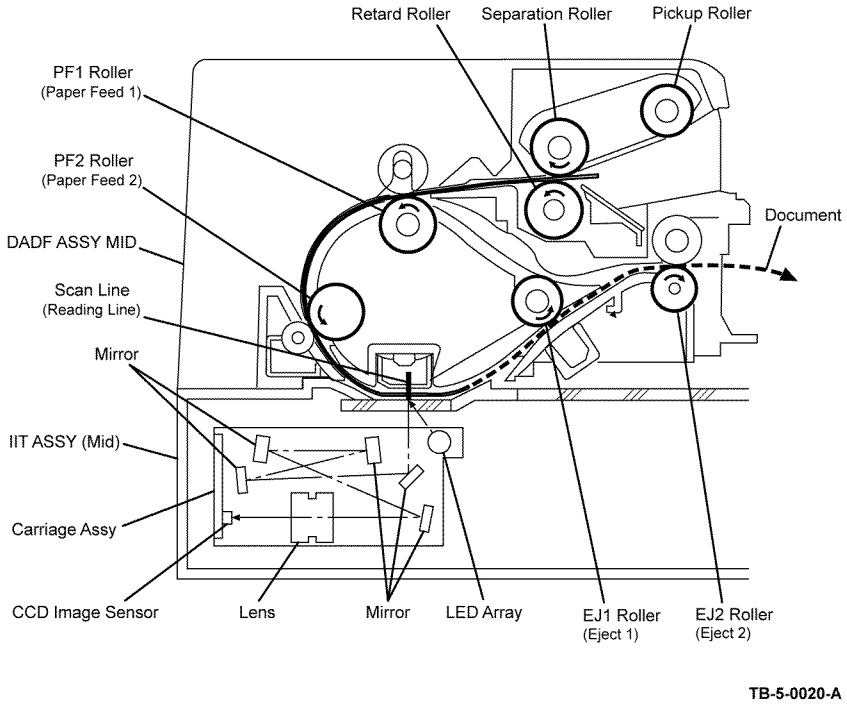

Figure 7 DADF simplex document path

DADF Paper Path (Duplex)

After scanning a document is completed and the rear edge of the document is passed through the flapper gate, the eject 2 roller is reversed by the reverse drive of the DADF motor, and the document is nipped into the DADF. The document is reversed at this time.

When the document is fed near side of the paper feed 1 roller, the DADF motor returns to the positive rotation drive, and the document is fed to the scanner home position (CVT) by the torque from the paper feed 1 roller and paper feed 2 roller. The document scanned at the CVT position is fed to the document output tray of the DADF by the eject 1 roller and eject 2 roller. Refer to Figure 8.

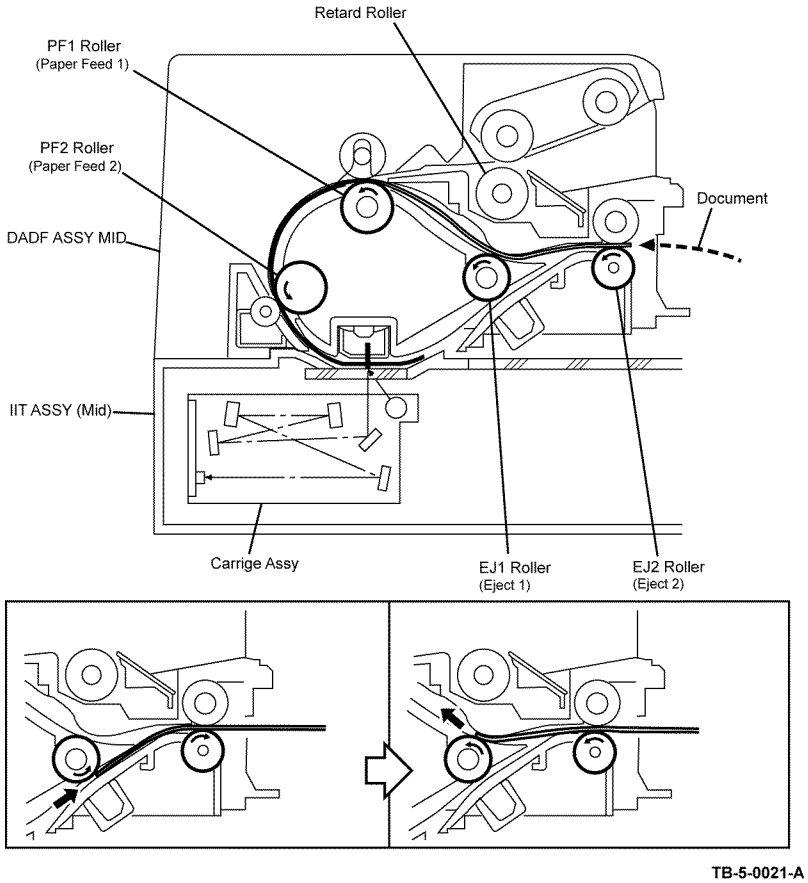

Figure 8 DADF duplex document path

Functions of Major Functional Components

Major functional components of the printer and the scanner are described below:

- Paper Feeder
- Charging/Cleaning
- ROS
- Development
- Transfer/Drive
- Fusing/Exit
- Optional 550 Sheet Feeder
- UI
- Scanner
- DADF

Paper Feeder

Refer to Figure 1. The major components are listed below:

- Registration clutch. Transmits the torque of the main drive assembly to the registration roll.
- Tray feed clutch. Transmits the torque of the main drive assembly to the feed roll and the nudger roll of tray 1.
- MSI solenoid feed. Releases the stopper of the MSI to allow the nudger roll to contact the top sheet of the stack loaded in the MSI.
- Registration sensor (mounted on the HVPS). Detects that the lead edge of the paper has reached the registration section based on the change of the actuator position.
- Tray 1 no paper sensor (mounted on the HVPS). Detects the presence/absence of sheets in tray 1 based on the change of the actuator position.
- MSI no paper sensor (mounted on the HVPS). Detects the presence/absence of sheets in the MSI based on the change of the actuator position.

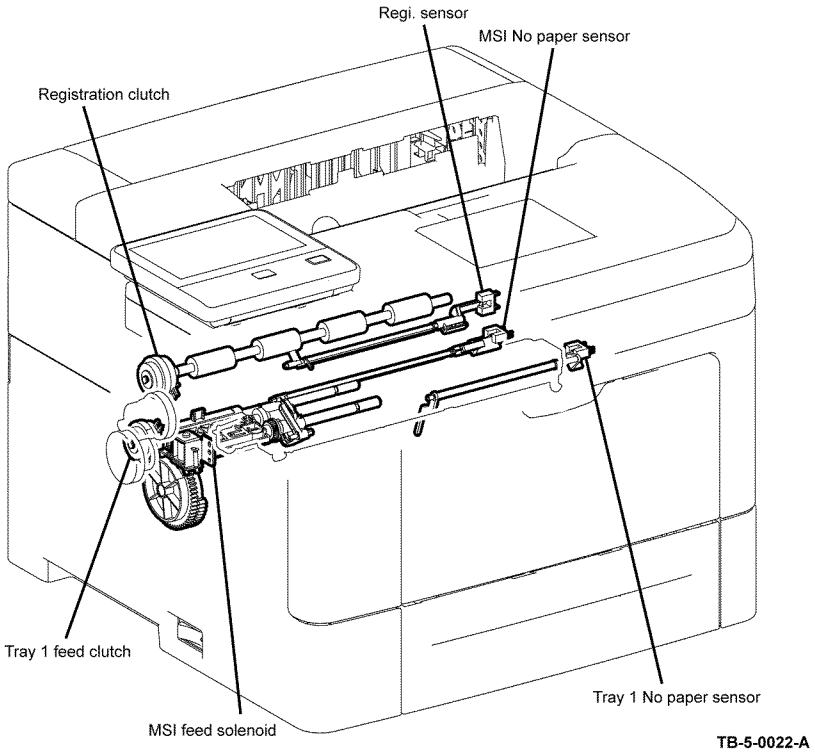

Figure 1 Paper feeder

Charging/Cleaning

Refer to Figure 2. The major components are listed below:

- The drum forms an electrostatic latent image and a toner image.
- The BCR charges the drum electrically.
- The cleaning blade removes the toner remaining on the drum after the toner image is transferred to the paper.
- The BCR cleaning roll removes the toner remaining on the BCR.

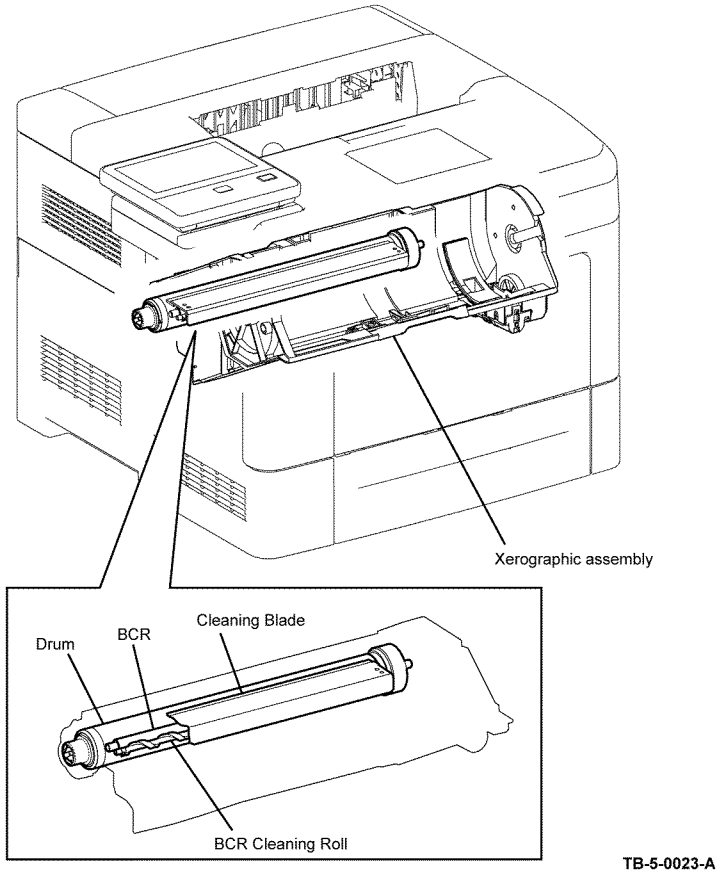

Figure 2 Charging/cleaning

ROS

The ROS assembly is an exposure device that emits laser light to form an electrostatic latent image on the Drum surface. Refer to Figure 3. The major components are listed below:

- PWB LDD. Converts the image data coming in from the PWB ESS SFP to the ROS assembly into laser light, and illuminate the built-in laser diode.
- Motor Polygon assembly. Consists of the scanner motor that rotates at a constant speed and of the polygon mirror installed on the motor shaft.
- PWB SOS. A PWB equipped with the SOS sensor. The SOS sensor converts the incoming laser light into an electrical signal as the reference point for scanning start, and sends it to the PWB MCU.

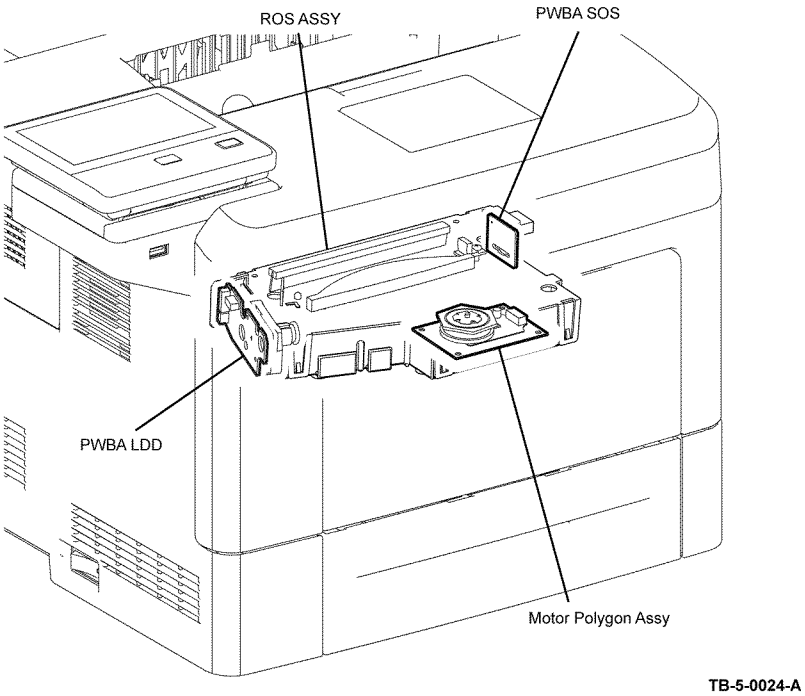

Figure 3 ROS

Development

Refer to Figure 4. The major components are listed below:

- Toner cartridge. Contains toner and is installed with the customer replaceable unit memory (CRUM) that stores cartridge-specific information.
- Toner CRUM connector assembly. Contacts the CRUM installed on the toner cartridge to relay the cartridge-specific data stored in the CRUM to the PWB MCU.
- Dispense motor. Supplies toner from the toner cartridge tn to the development unit by driving the auger in the toner cartridge.
- ATC sensor. Detects the toner density in the development unit.
- Magnet roll. Contacts the drum to form a toner image on its surface.
- Trimmer rod. Spreads the toner and carrier evenly on the magnet roll.
- Auger. Agitates the toner.
- Xerographic connector assembly. Contacts the CRUM installed on the drum cartridge to relay the component-specific data stored in the CRUM to the PWB MCU.
- The drum cartridge is installed with the CRUM that stores component-specific information.

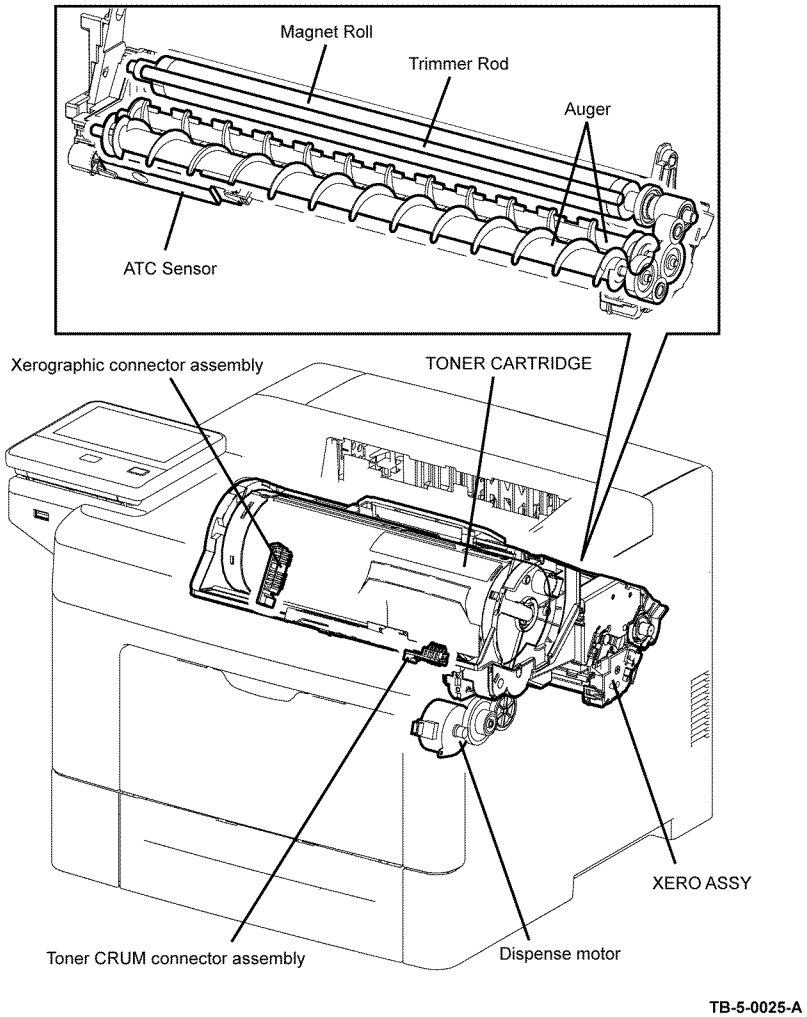

Figure 4 Development

Transfer/Drive

Refer to Figure 5. The major components are listed below:

- CRU transfer roll assembly (bias transfer roll (BTR)). Transfers the toner image on the drum surface to the paper. The BTR is in contact with and driven by the drum.
- Main drive assembly. A motor that drives various components of the printer. Drives the paper feed system, drum, development unit, and fuser.

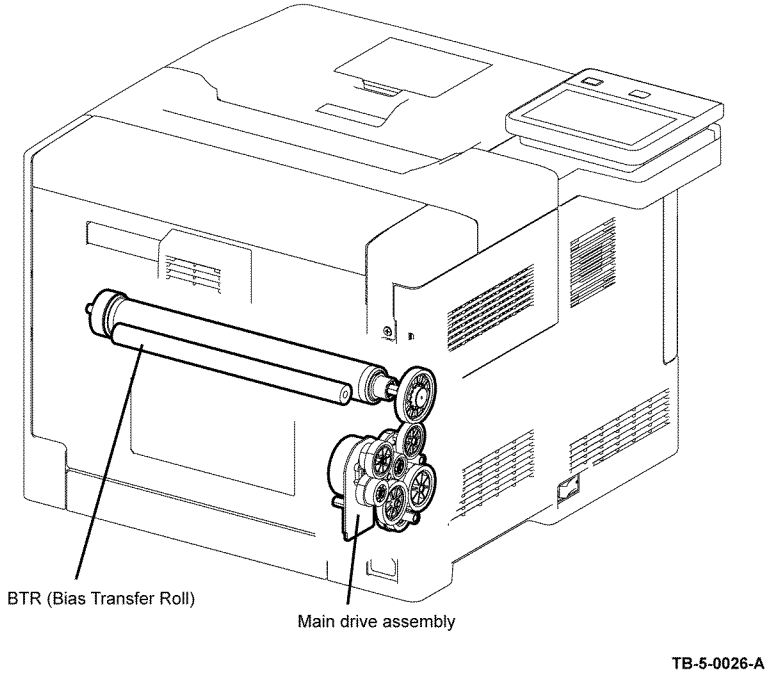

Figure 5 Transfer/drive

Fusing/Exit

Refer to Figure 6. The major components are listed below:

- Fuser. A unit that consists of the fusing unit that fuses, by heat and pressure, the toner that has been transferred but has not been fused onto the sheet, and of the component for feeding the sheet while the sheet goes through the fusing process.
  - Heat roll. A metal roll that transfers heat to the sheet to fuse the toner particles onto the sheet surface.
  - Pressure belt. A belt containing a pressurizing system. It pressurizes the sheet against the heat roll to fuse the toner to the sheet.
  - Heater lamp. A heating-coil-enclosed lamp located inside the heat roll. It is a heating device that heats the entire heat roll.
  - Temperature sensor. A thermistor (temperature-responsive resistance) positioned in contact with the middle section (main) and the end section (side) of the heat roll to detect its surface temperature and to prevent the heater lamp from overheating.
  - Thermostat. A component connected in series with the power supply for the heater lamp. Prevents the overheating of the heat roll by releasing the contacts in case the contact section has reached a certain temperature due to a failure of overheating prevention by the temperature sensors (thermistors).
- Exit sensor. Detects whether the fused print has passed through the fuser based on the change of the actuator position (sheet passed: sensor beam blocked).
- Exit clutch assembly. Transfers the drive of the main drive assembly to the exit roll. The exit roll rotates in the paper exit direction.
- Inverter clutch assembly. Transfers the drive of the main drive assembly to the exit roll. The exit roll rotates in the duplex feed direction.
- Full stack sensor. Detects the state that paper is full on the exit section.

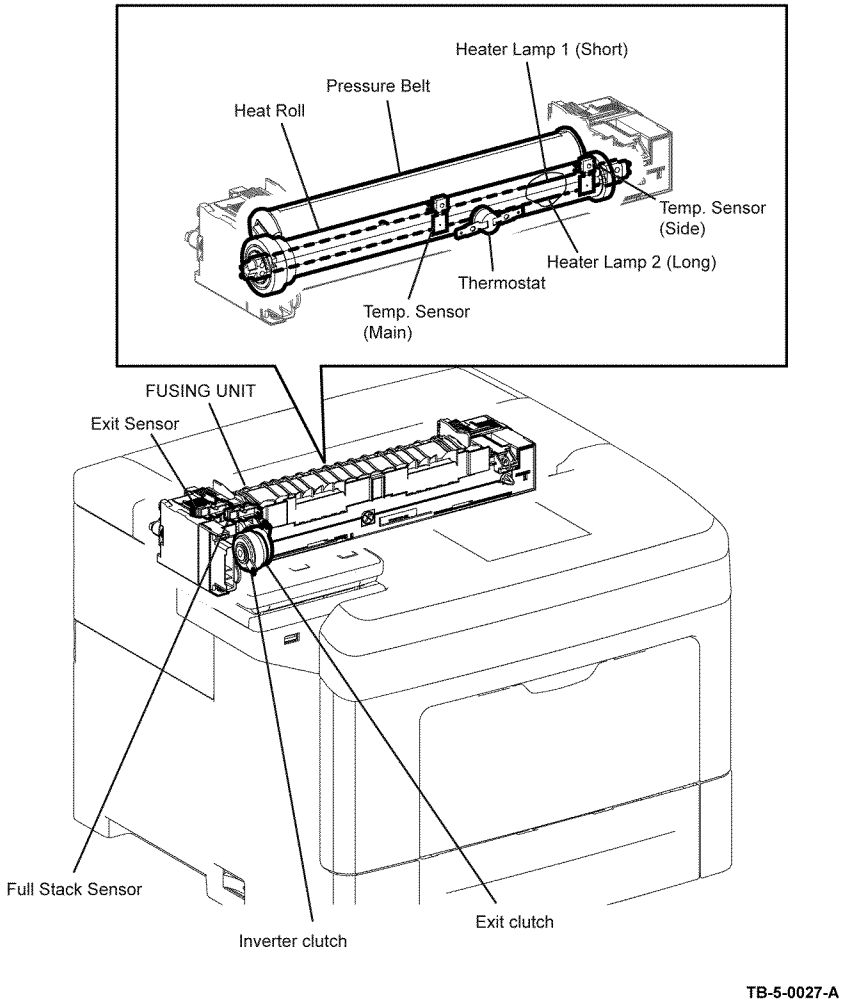

Figure 6 Fusing/exit

Electrical

B405 (MFP)

Refer to Figure 7. The major components are listed below:

- LVPS PWB. Supplies the AC power from the power supply to the heater section of the fuser and generates stable low DC voltage (+24VDC, +5VDC, and +3.3VDC) to be used by the logic circuits and other components.
- Front interlock switch. Detects the opening and closing of the cover front. When the cover front is open, the relay circuit for the +24VDC in the PWB LVPS is interrupted, and the supply of the I/F +24VDC for the PWB MCU is stopped.
- Rear interlock switch. Detects the opening and closing of the cover assembly rear. When the cover assembly rear is open, the relay circuit for the +24VDC in the PWB LVPS is interrupted, and the supply of the I/F +24VDC for the PWB MCU is stopped.
- MCU PWB. Performs the control of the communication between the print controller, or the control of each component at printing.
- HVPS. Supplies high voltage to the BCR in the drum cartridge, and to the BTR in the CRU transfer roll assembly.
- ESS PWB. The print controller that controls the entire system when communicating with the computer or when processing image data.
- LVPS fan. Discharges the heated air around the PWB LVPS out of the printer.
- Rear fan. Discharges the heated air around the fuser and drum cartridge out of the printer.

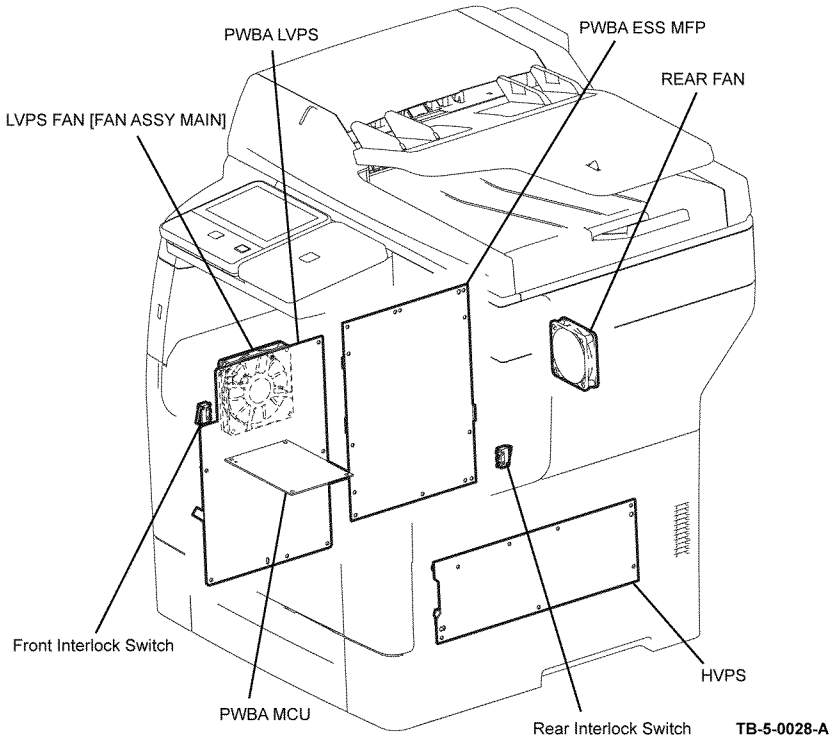

Figure 7 Electrical (B405)

B400 (SFP)

Refer to Figure 8. The major components are listed below:

- Main switch. The switch for turning the power on.

- LVPS PWB. Supplies the AC power from the power supply to the heater section of the fuser and generates stable low DC voltage (+24VDC, +5VDC, and +3.3VDC) to be used by the logic circuits and other components.
- Front interlock switch. Detects the opening and closing of the cover front. When the cover front is open, the relay circuit for the +24VDC in the PWB LVPS is interrupted, and the supply of the I/F +24VDC for the PWB MCU is stopped.
- Rear interlock switch. Detects the opening and closing of the cover assembly rear. When the cover assembly rear is open, the relay circuit for the +24VDC in the PWB LVPS is interrupted, and the supply of the I/F +24VDC for the PWB MCU is stopped.
- MCU PWB. Performs the control of the communication between the print controller, or the control of each component at printing.
- HVPS. Supplies high voltage to the BCR in the drum cartridge, and to the BTR in the CRU transfer roll assembly.
- ESS PWB. The print controller that controls the entire system when communicating with the computer or when processing image data.
- LVPS fan. Discharges the heated air around the PWB LVPS out of the printer.
- Rear fan. Discharges the heated air around the fuser and drum cartridge out of the printer.

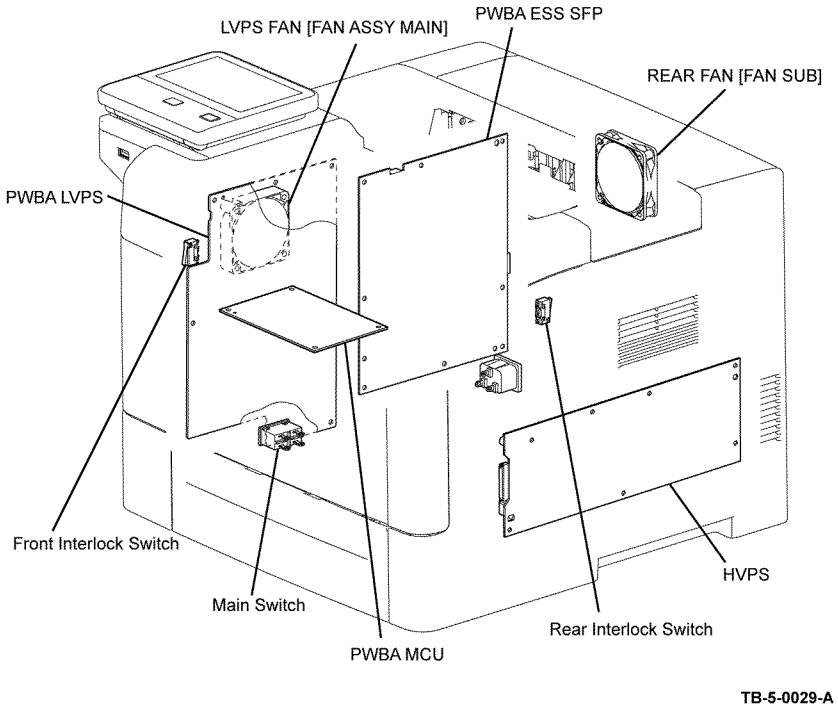

Figure 8 Electrical (B400)

Optional 550 Sheet Feeder

Refer to Figure 9. The major components are listed below:

- Option tray PWB assembly. Controls the components in the optional 550 sheet feeder.
- Take away clutch assembly. Transmits the torque of the option feeder motor to the roll assembly take away.
- Option feeder clutch. Transmits the torque of the option feeder motor to the feed roll and nudger roll.
- Path sensor. Detects that the sheet has been fed from the tray based on the change of the actuator position.
- No paper sensor. Detects the presence/absence of paper in the tray based on the change of the actuator position.
- Motor assembly. A DC motor that drives the rolls in the optional 550 sheet feeder.

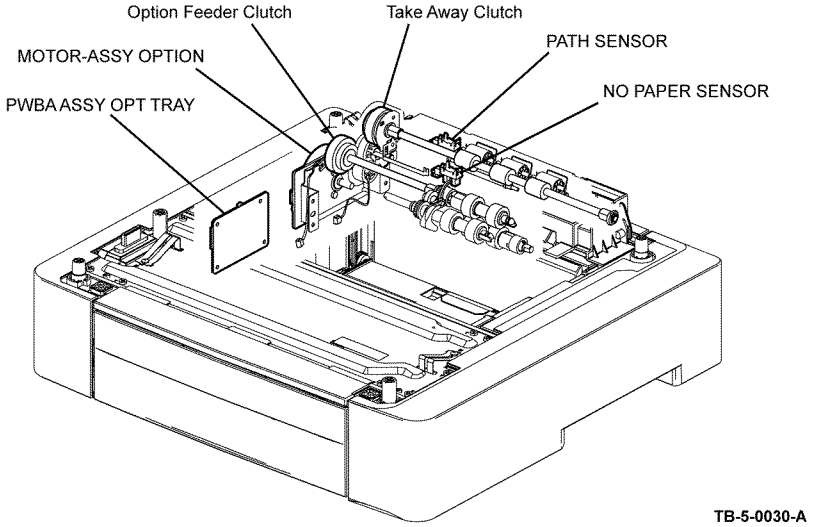

Figure 9 Optional 550 sheet feeder

UI

B405 (MFP)

Refer to Figure 10. The major components are listed below:

- Console assembly UI. The console assembly UI displays the state of the printer and fax using touch panel and LED, and operates the printer and fax using the touch panel and buttons.
- Speaker UI. Generating the operation sound for the console assembly UI. The speaker UI itself is attached to the main device side.
- USB harness front. This connector is used to use the functions that access the machine via the local interface (USB direct print, scan to USB memory).

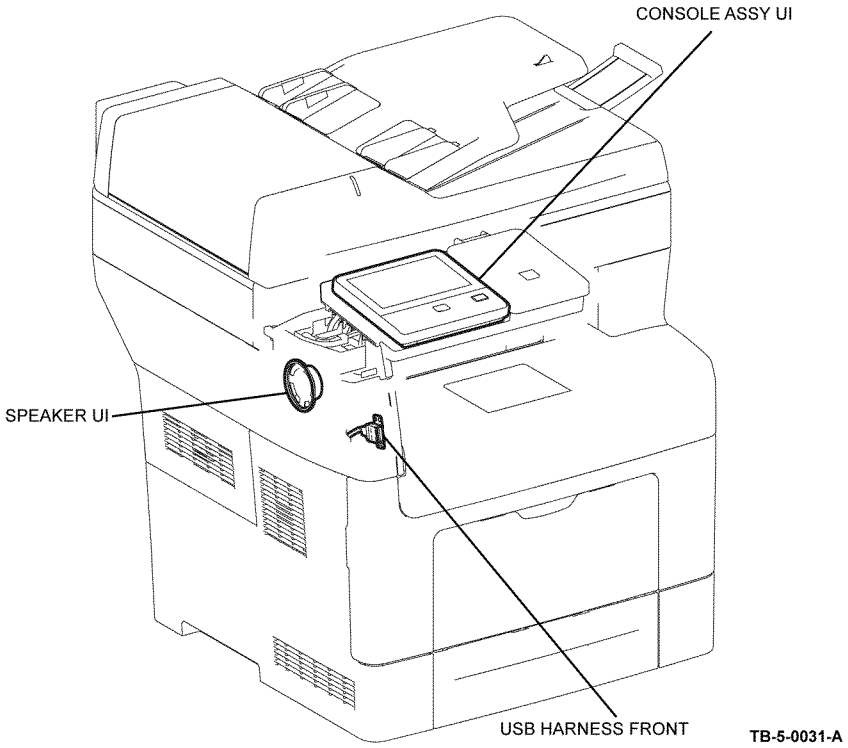

Figure 10 UI (B405)

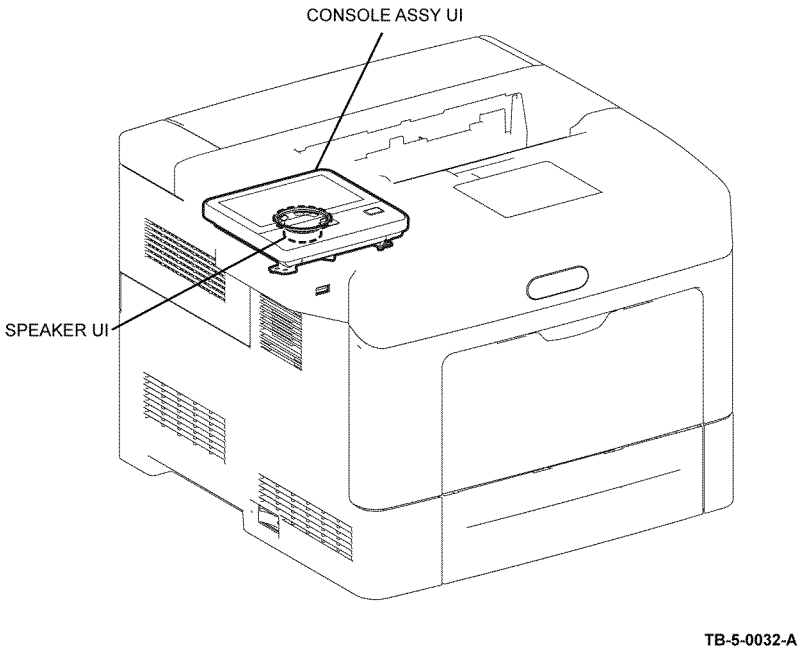

Figure 11 UI (B400)

B400 (SFP)

Refer to Figure 11. The major components are listed below:

- Console assembly UI. The console assembly UI displays the state of the printer and fax using touch panel and LED, and operates the printer and fax using the touch panel and buttons.
- Speaker UI. Generating the operation sound for the console assembly UI. The speaker UI itself is attached to the main device side.

Fax

Refer to Figure 12. The major components are listed below:

- Fax PWB. The PWB for controlling the fax signal
- Speaker assembly AIO. Indicating that the call is a telephone call. The speaker assembly AIO itself is attached to the main device side.

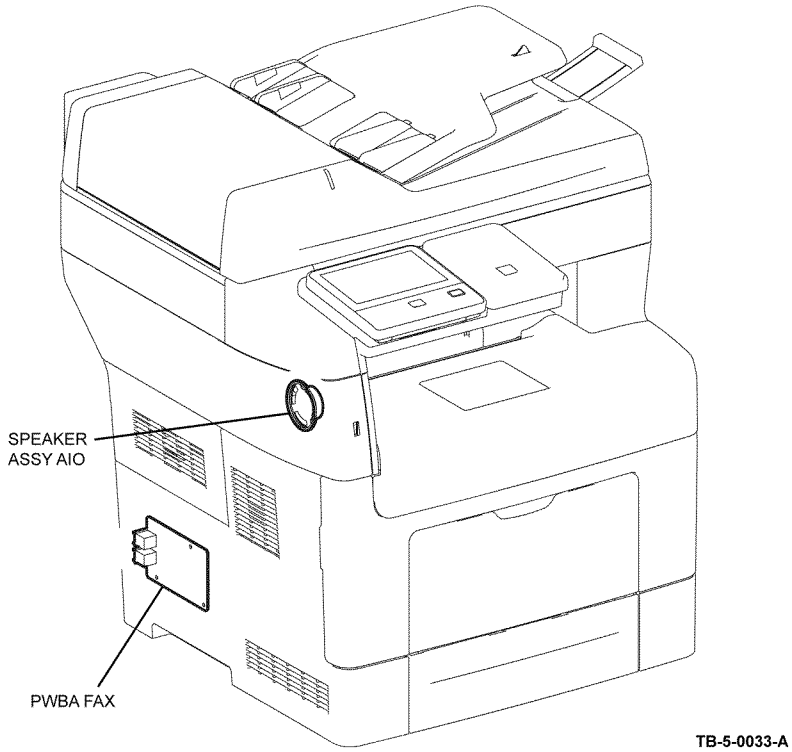

Figure 12 Fax

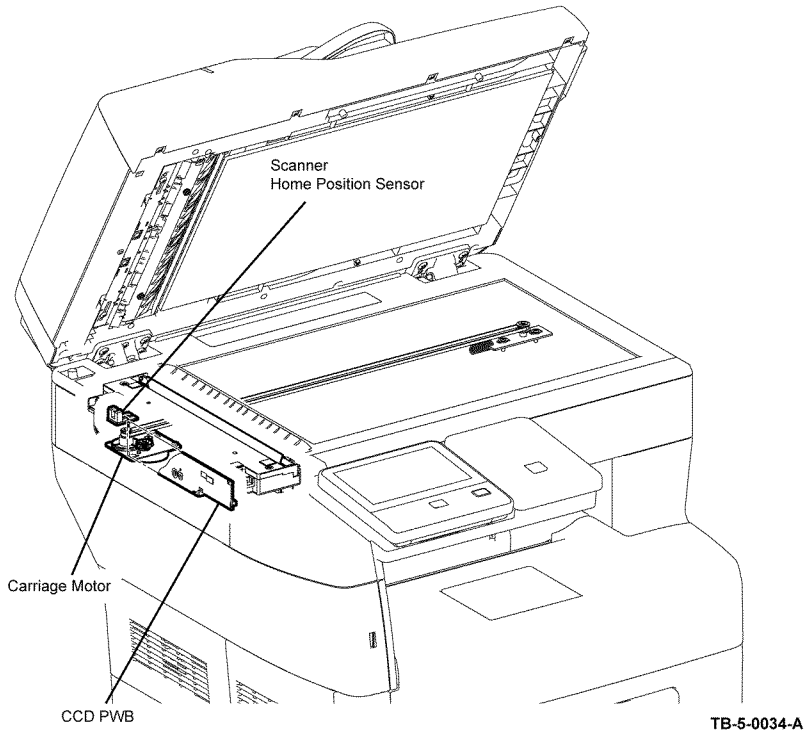

Figure 13 Scanner

Scanner

Refer to Figure 13. The major components are listed below:

- Carriage motor. The stepping motor that drives the carriage assembly.
- Scanner home position sensor. The part of the rear side of the carriage assembly frame functions as an actuator and blocks the light of the scanner home position sensor, thus detecting the registration position.
- CCD PWB. The PWB mounted with the CCD image sensor that inputs the image data.

DADF

Refer to Figure 14. The major components are listed below:

- Tray sensor. A sensor that detects the presence or absence of a document on the DADF document tray.
- DADF cover sensor. A switch that detects whether or not the DADF top cover is open.
- Feed sensor. Located near side of the scanner home position (CVT) and detects the scanning timing.
- DADF stage sensor. Detects that the document has been fed from the document feeder tray. Also, detects that a reverse side of a document is nipped into the duplex feed path by the torque of the eject 2 roller, after scanning the front side of the document is completed and then the document is reversed.
- DADF motor. The DADF motor rotates the paper feed 1 roller, paper feed 2, eject 1 roller and eject 2 roller.
- Pick motor. The pick motor rotates the pickup roller and separation roller.
- DADF document LED. If a document is detected by tray sensor, dadf document led will light up.

- Legal paper sensor. A sensor that detects the presence or absence of a legal size document on the DADF document tray.

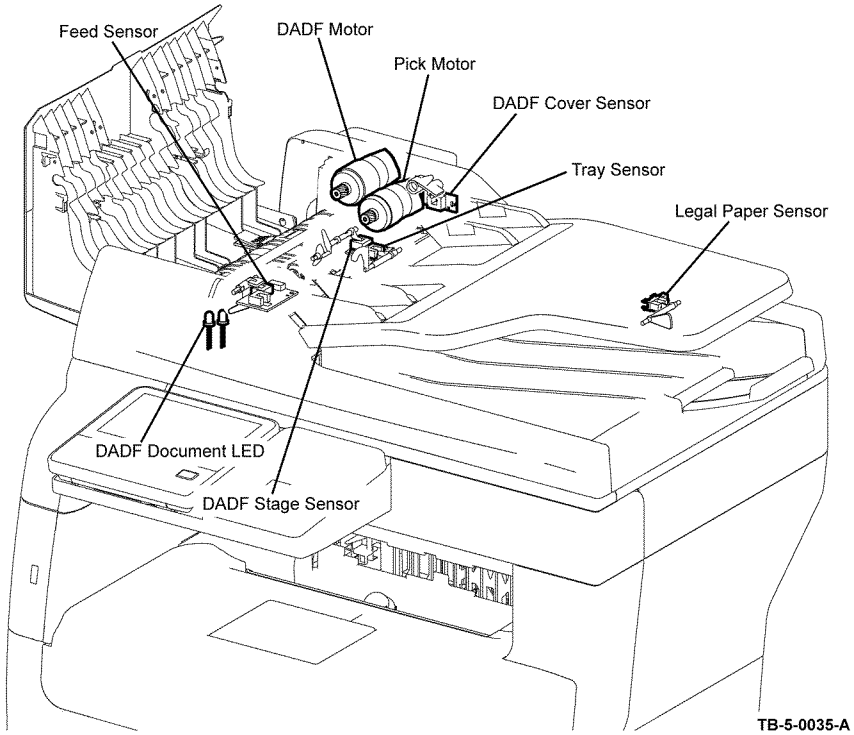

Figure 14 DADF

Document Stopper

When a document is loaded in the DADF, the document stopper is locked to prevent the document from being moved forward. When the DADF starts feeding, the front portion of the pickup assembly is lowered. This unlocks the document stopper that blocks the document, and the document is fed. When the paper feed is completed, the pickup assembly returns to its original position. Refer to Figure 15.

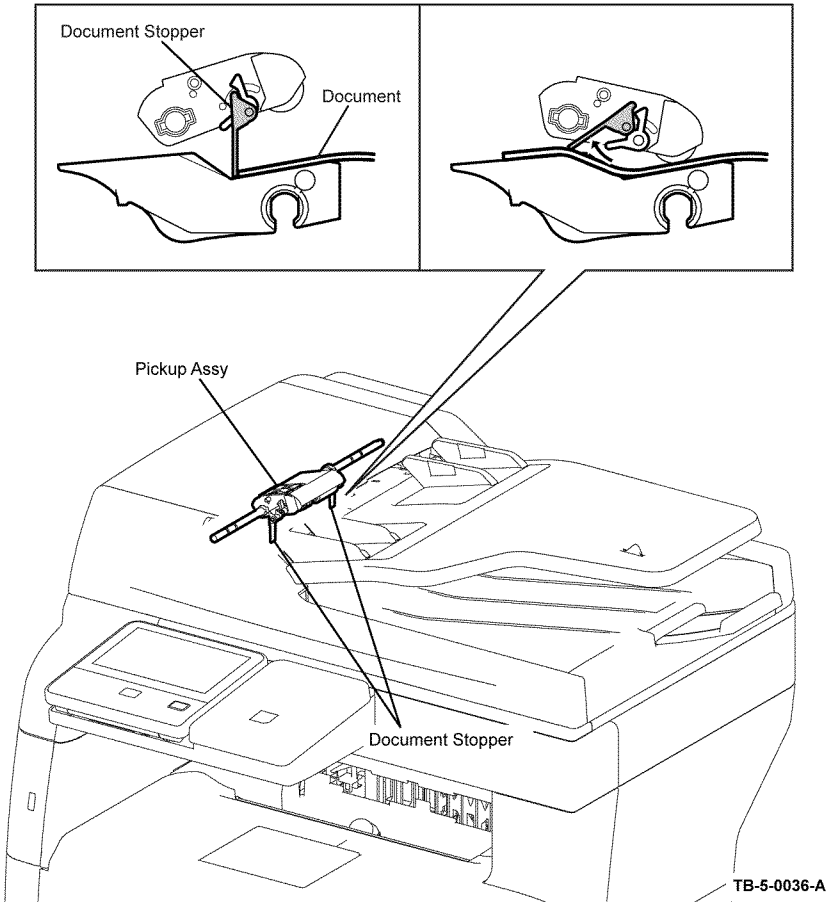

Figure 15 Document stopper

Pinch Roll Assembly

The pinch roll assembly is normally pressed against the direction of the takeaway roll by the spring pressure. Documents are fed through between the pinch rolls and the takeaway roll to the CVT Window by the rotation of the takeaway roll. If a jam occurs between the pinch roll assembly and the takeaway roll, it is hard to retrieve documents due to the high spring pressure of pinch roll assembly. In order to retrieve jammed documents, open the cover assembly DADF to release the spring pressure, and make enough clearance between the pinch rolls and the takeaway roll. Refer to Figure 16.

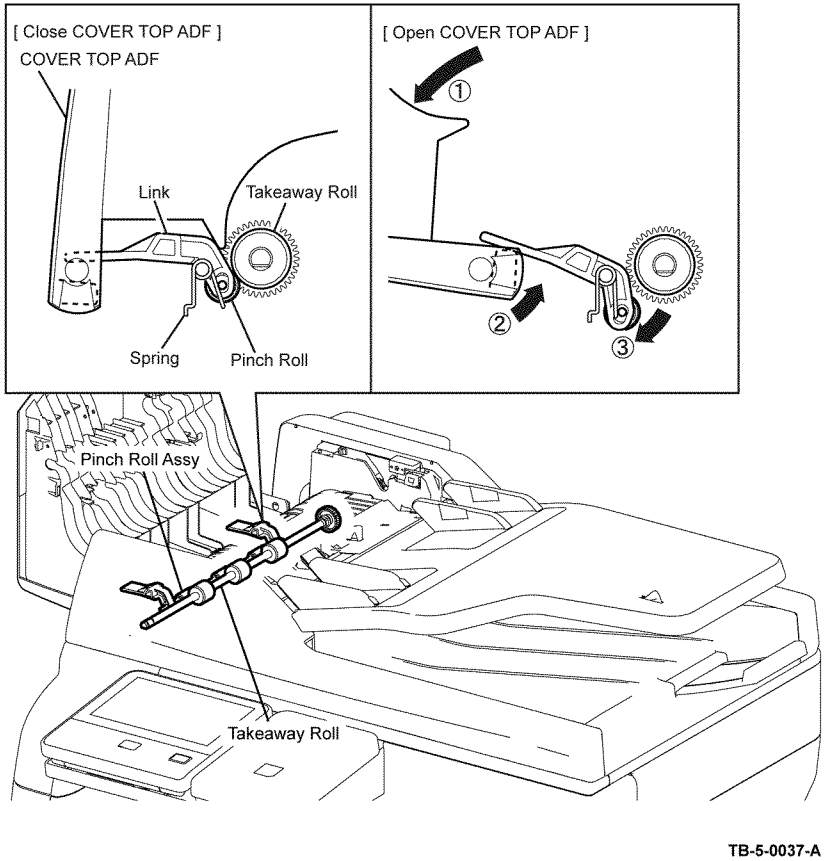

Figure 16 Pinch roll assembly

Data Flow

Data Flow (IOT)

The print data (electric signal) from the printer controller flows as shown in Figure 1 before it is turned into a print.

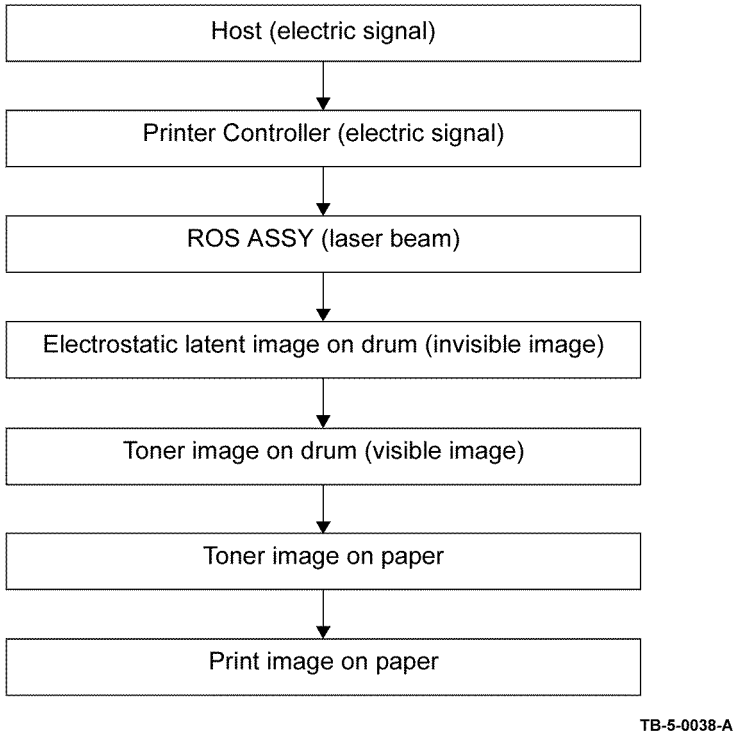

Figure 1 Data flow (IOT)

Data Flow (Scanner)

The image data from the document set on the IIT or DADF goes through the following components before it is printed at the engine section. Refer to Figure 2.

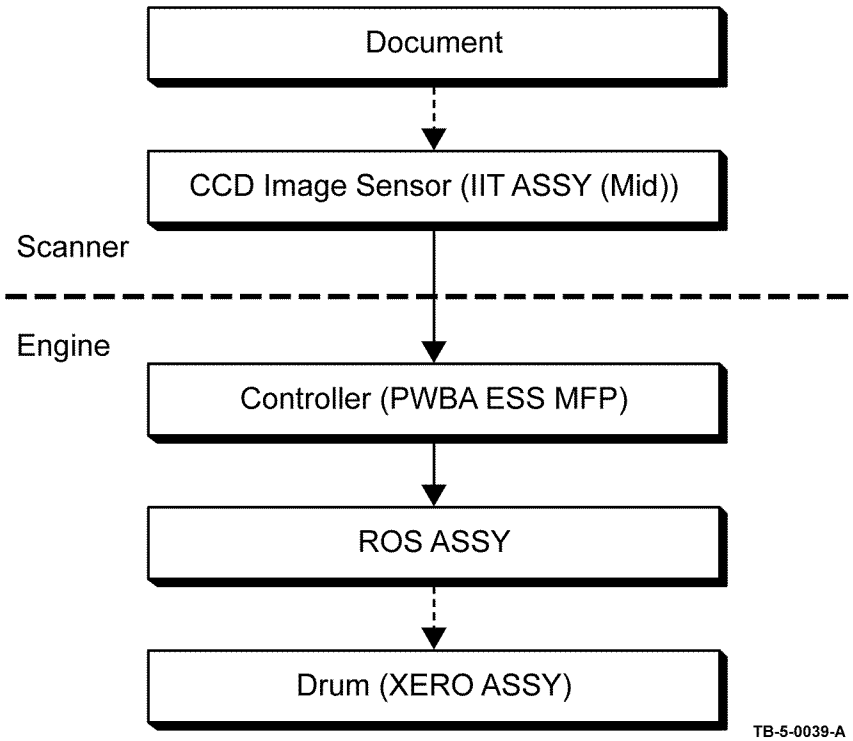

Figure 2 Data flow (scanner)

Operation Modes

The printer can be operated in the following modes:

Power-off Status

The power button is off and no power is supplied. The machine does not operate.

Ready (Standby) Mode

This mode is called as ‘Energy Saving: Step 1’.

When the system starts up by power-on, it shifts from the power-off state to the standby mode. At this point, the provided functions (copying, Fax sending, network scanning) become available via the operator panel. Fax receiving and printing, Direct Fax, and local scanning also become available (B405).

After selecting Power Save on the operator panel, the machine enters the Sleep Mode to save more power consumption.

Running Mode

There are the Print mode, Scan mode, and Fax communication mode in which the IOT, IIT, and Fax communication operate respectively.

Print Mode

In this mode, the IOT is operating for printing and report printing (B400).

In this mode, the IOT is operating for printing, copying, Fax received printing, and report printing (B405).

Scan Mode (B405 Only)

In this mode, the IIT is operating for copy scanning, local scanning, network scanning, and Fax sending.

Fax Communication Mode (B405 Only)

In this mode, Fax sending/receiving is in progress.

Low Power Mode

This mode is called as ‘Energy Saving: Step 2’.

When no job is executed for a certain period of time, the machine enters this mode to reduce the standby electricity consumption.

The shift time from the Standby mode to Low Power mode can be changed from the operator panel (Setting range: 1-60 min). The factory default is 1 minute.

The conditions that Low Power mode to Ready mode:

- Pressing ‘Energy Save’ on the operator panel
- Receiving a print job
- Receiving a Fax job (B405 only)

- Receiving Fax job (B405 only)
- Detecting hook-off of external telephone (default: off)
- Report printing directions.
- At the time of USB memory insertion.
- Start sending or polling data at the communication, if start time specified by the operator (B405 only)

Sleep Mode

This mode is called as ‘Energy Saving: Step 3’.

After the Low Power Mode has continued for a certain period of time, the machine enters this mode to reduce the standby electricity consumption. The shift time from the Low Power mode to the this mode fixed at 1 minute.

Sleep mode is cancelled by:

- Pressing ‘Energy Save on the operator panel
- Receiving a print job
- Receiving a Fax job (B405 only)
- Detecting hook-off of external telephone (default: off)
- Report printing directions.
- At the time of USB memory insertion.
- Start sending or polling data at the communication, if start time specified by the operator (B405 only).

Control

Document Scanning Steps

A CCD image sensor is used to read image data from the document. To ensure stabilized image reading, the CCD image sensor output is adjusted. Adjustment includes Automatic Gain Control (AGC) and Automatic Offset Control (AOC).

Reference data for adjustment is collected and used to perform compensation on the read image data. Compensation includes shading compensation, white variation compensation, and black variation compensation. These adjustment and compensation steps are described below.

Reference data is obtained by reading image data from a white reference plate via the CCD image sensor.

AGC (Auto Gain Control): White Level Variation Adjustment

During AGC, the scanner assembly is moved to the position of the white reference plate, and the exposure lamp is illuminated. The light reflected from the white reference plate is read by the CMOS image sensor as the white reference value, which is used to adjust CMOS image sensor output.

AOC (Auto Offset Control)

AOC is performed by turning off the exposure lamp after AGC. This state is read by the CMOS image sensor as the black reference value, which is used to adjust CMOS image sensor output (the order of AGC and AOC adjustment depends on the model).

Shading Compensation

Shading compensation compensates for pixel-by-pixel sensitivity variations and the non uniformity of lamp light in the fast scanning direction. The AGC and AOC adjustment values are used to compensate for the image data read by the CCD image sensor.

System Configuration

The ESS PWB controls the Fax, scanner, and DADF. Fax and copy operations are performed according to data entered at the operation panel. Figure 1 shows the system configuration.

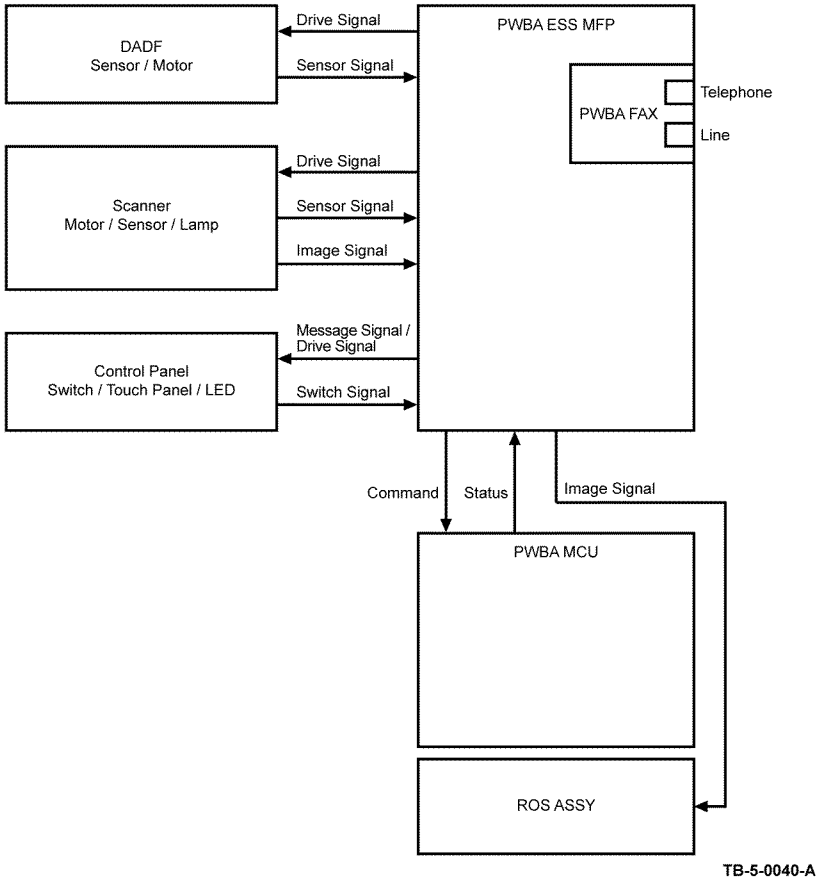

Figure 1 Control

Drive Transmission Route

Main Drive Assembly

Refer to Figure 1.

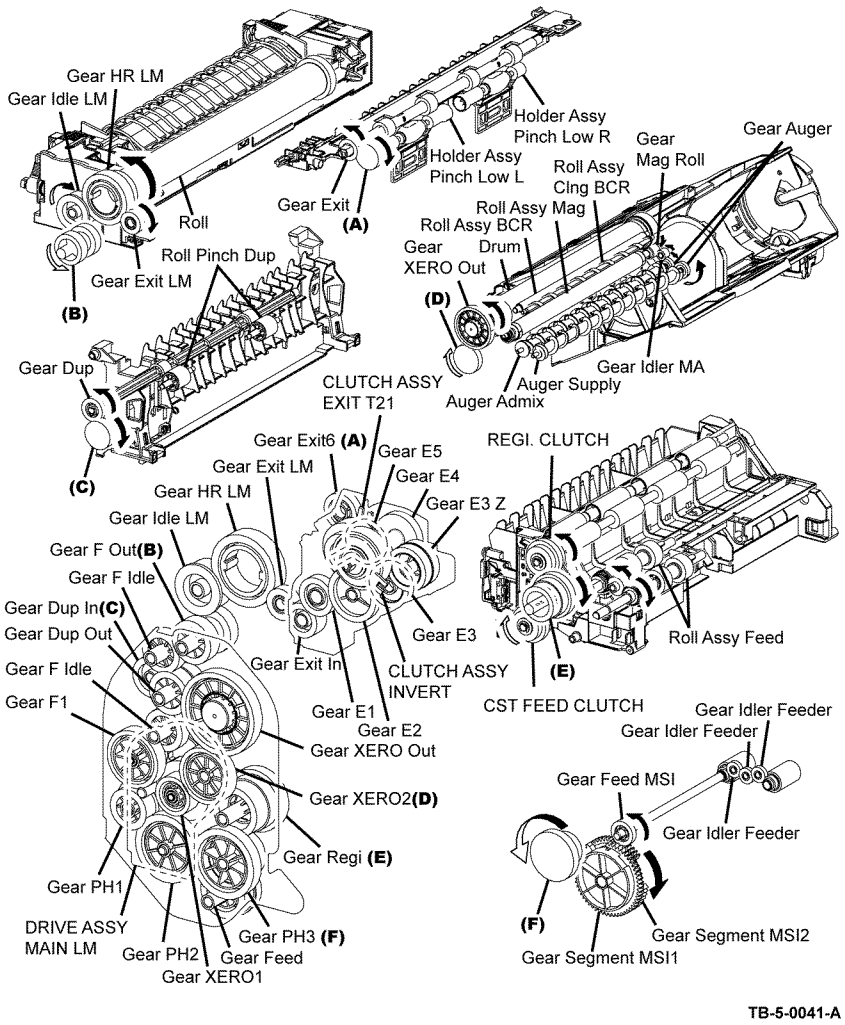

Figure 1 Main drive assembly

Toner Dispense Motor

Refer to Figure 2.

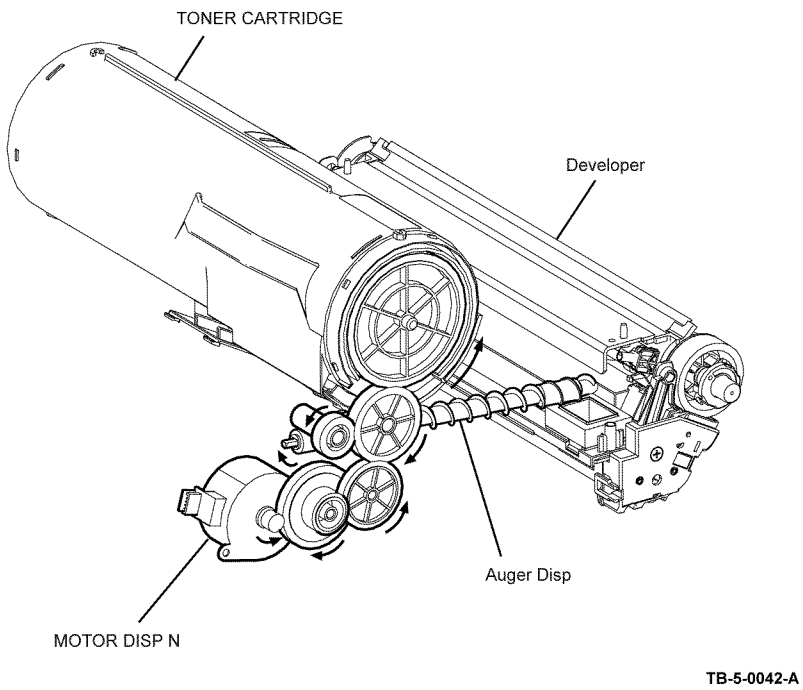

Figure 2 Toner dispense motor

Option Motor Assembly

Refer to Figure 3.

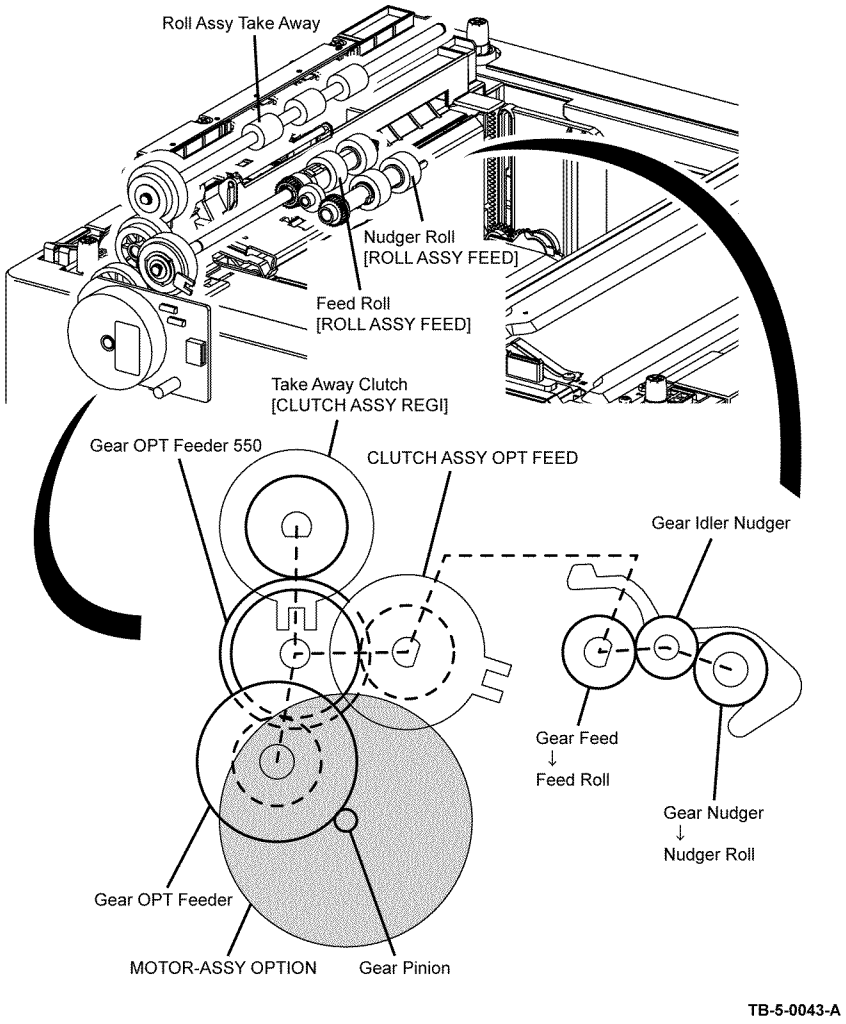

Figure 3 Option motor assembly

DADF Motor

Refer to Figure 4.

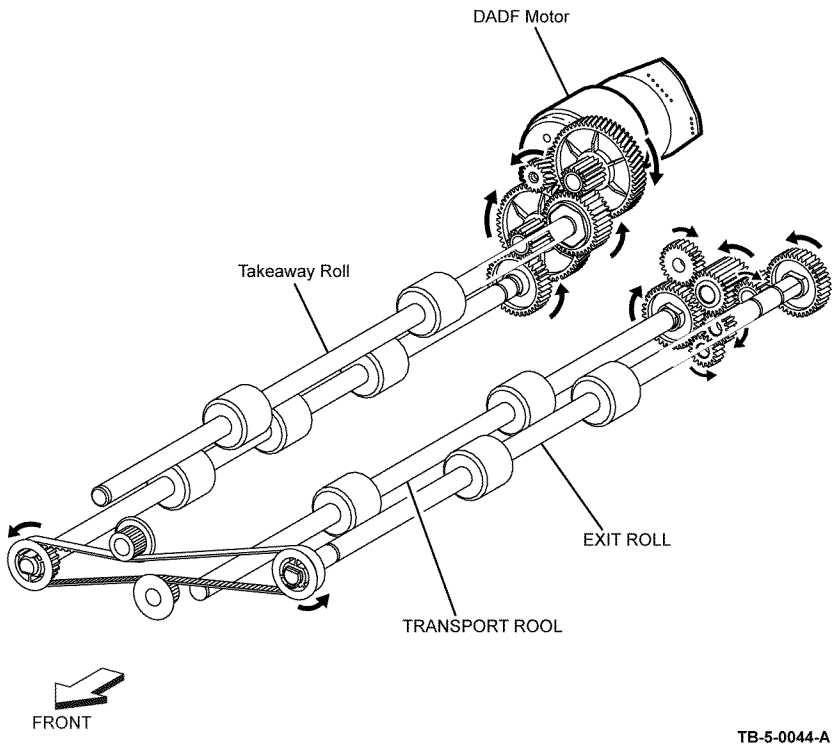

Figure 4 DADF motor

Pick Motor

Refer to Figure 5.

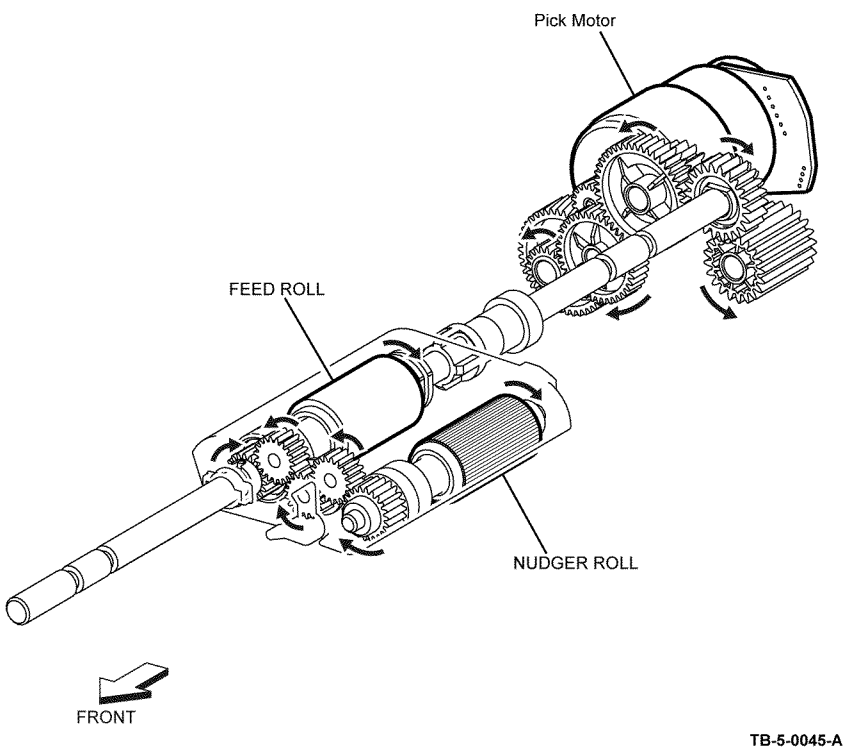

Figure 5 Pick motor

Telephone System

Converting and Sending Voice in the Form of Electrical Signals

The human voice is a sound wave; in other words, air vibrations. Conversation between two people results when such vibrations travel through the air and reach each other's ears. A string telephone transmits the air vibrations generated between two people along a string stretched tight, thus allowing conversation over a distance. In this system, a paper cup at one end of the string receives the air vibrations, which are then transmitted along the string. A paper cup at the other end of the string transmits them back to the air, so that they again become again audible sound waves.

A telephone is a device that replaces the vibrations transmitted by string with electrical signals. The two paper cups correspond to microphone and speaker and the string to the telephone line. Because electrical signals travel over the telephone line at a high speed with minimal attenuation, the telephone enables conversation over great distances.

Voice is changed into electrical signals using electromagnetic induction, a process by which electrical signals are generated by vibrating a coil in a magnetic field. Both the microphone and speaker exploit this process. The microphone transduces sound into electrical signals using electromagnetic induction that occurs at a moving coil coupled to a diaphragm picking up air vibrations.

On the other hand, the speaker functions in the reverse manner, transducing electrical signals back to air vibrations. Therefore, its construction is basically the same as that of a microphone. Electrical signals passing through a coil in the magnetic field vibrate the coil, which in turn vibrate the air to reproduce the voice. Refer to Figure 1.

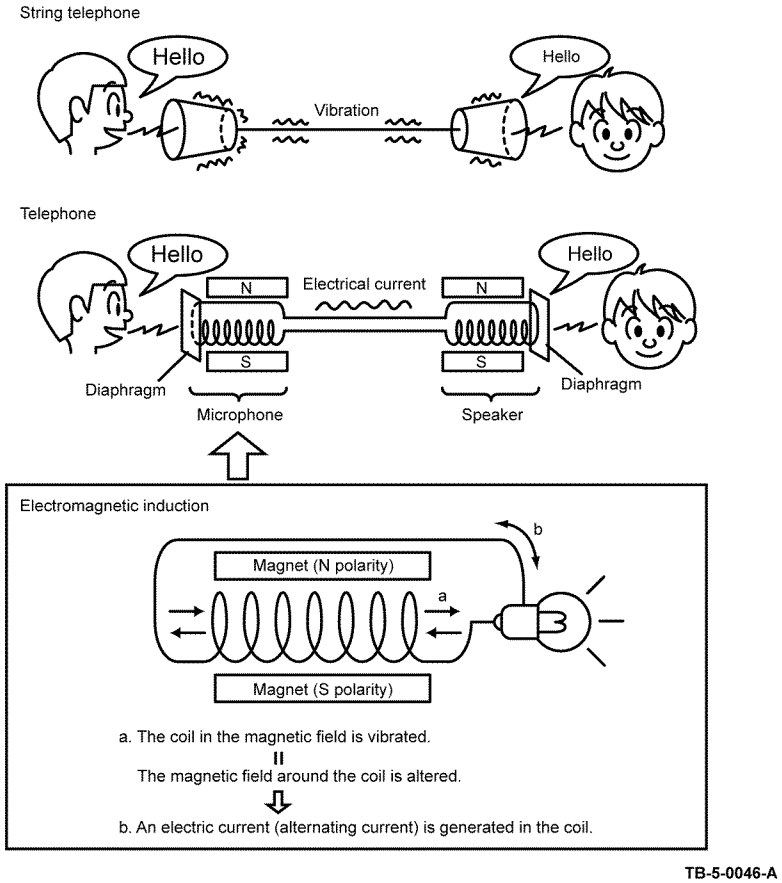

Figure 1 Telephone system

These electrical signals are analog signals that fluctuate in response to the volume of the voice.

Analog and Digital Signals

An electrical signal generated by the telephone's microphone is an analog signal. The waveform of this analog signal fluctuates responsive to the voice volume. When the voice is loud, the amplitude (voltage) increases; when soft, the amplitude decreases. When the voice is high-pitched, the frequency (number of vibrations) increases; when low-pitched, the frequency decreases.

A signal whose values change in a continuous manner with time like this is called an analog signal. In contrast, a digital signal is a set of values that change with time in a discrete instead of continuous manner. In other words, an analog signal is like a hill. A digital signal is like stairs.

A digital signal is a series of values obtained by sampling a continuous analog signal at a certain required rate. For example, when sampling is by time, the rate is once a second, millisecond, etc.

Because the sampling reduces the amount of data along the time axis, the converted signal is compressed and smaller in data size. Thus, once digitized, the signal information is thinned out compared to the original analog signal.

Moreover, digital signal transmission is performed by dividing a continuously changing electrical signal according to a certain rate of time, then converting each division to a value of 1 or 0, depending on whether it is greater or less than a specified threshold value. Compared to an analog signal, a digital signal offers precise data exchange because the only change that must be handled is that between 1 (high voltage) and 0 (low voltage) with respect to a standard value (the threshold value). Refer to Figure 2.

NOTE: *The difference between analog and digital signals can be easily understood by comparing analog measuring instruments, such as clocks and scales with their needles and gradations to digital gauges that display results as a value. An analog instrument with a continuously moving needle, can, at least in theory, be read beyond the decimal point to infinitely small divisions (12.47253... g, 35.1864... g, etc.). A digital instrument, however, can only display results to the minimum necessary decimal place (12.5 g, 35.0 g, etc.).*

NOTE: *Conversion of an analog signal to digital signal is called AD conversion. The reverse is called DA conversion. Image data read by a Fax is a digital signal in which zeros and ones are assigned according to whether or not there is black in the squares of a paper surface divided into a grid. Fax communications that use an analog telephone network perform DA conversion before transmitting the scanned image from the phone, and AD conversion before printing the received data.*

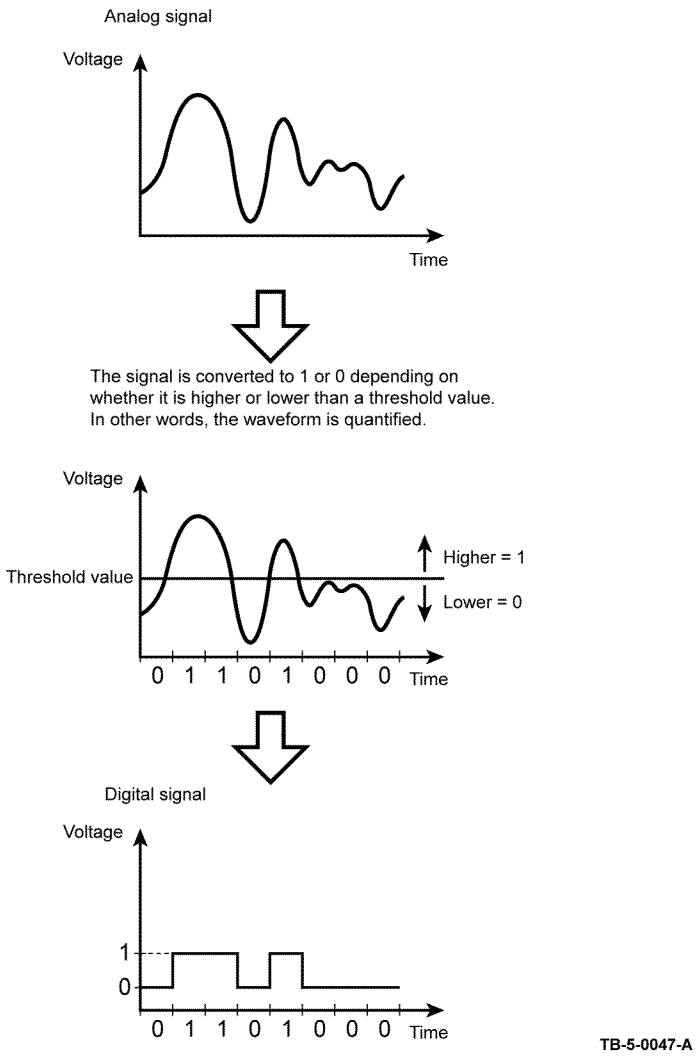

Figure 2 Signals

Telephone Call Connection Mechanism

Analog Telephone Network

To make a telephone call, the calling party and called party each must have a telephone set (telephone). These telephones must be connected by a transmission route. The transmission route includes switches located in central offices. The route itself comprises various components such as metallic cable and optical cable. The entire transmission path between the two telephones is called an analog telephone network.

An analog telephone network comprises four parts. Refer to Figure 1 and Figure 2.

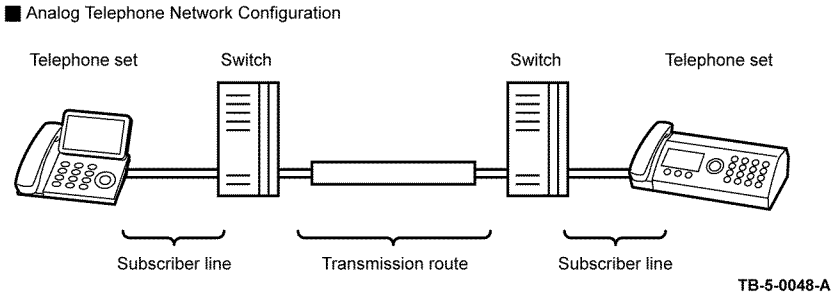

Figure 1 Analog telephone network

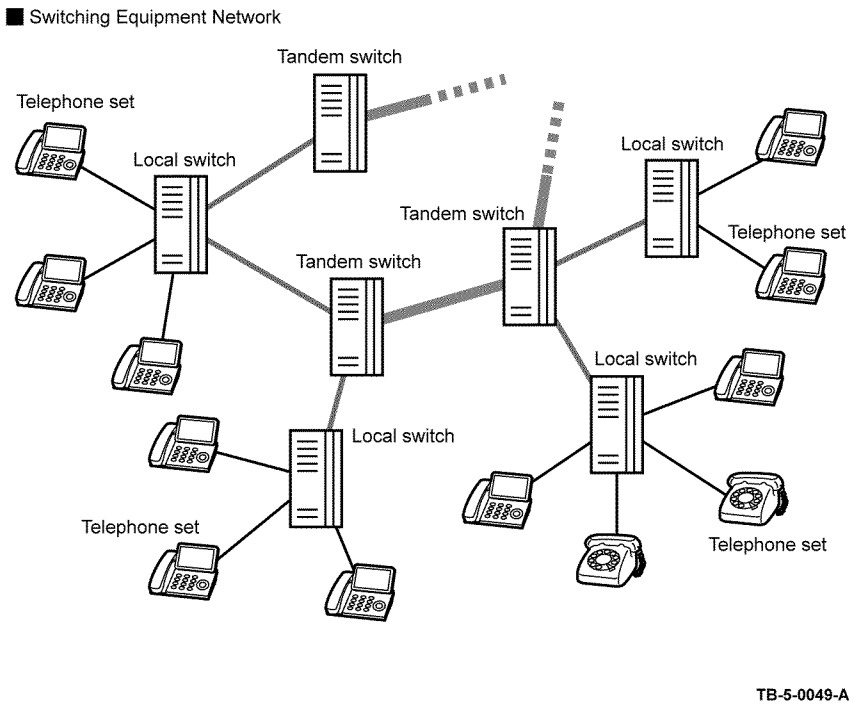

Figure 2 Switching equipment network

Telephone Call Connection Mechanism

1. When the handset is lifted, the hook switch is activated and a transmission signal (400Hz/48VDC), called a dial tone (DT), is sent from the local switch. The dial tone is audible at the handset speaker, indicating that the calling party can start dialing.
2. Entering the telephone number by rotating the dial or pushing the buttons transmits the number to the local switch.

NOTE: *There are two types of telephone line corresponding to the two ways of transmitting the phone number. They are known as dial types. Most recent telephones can automatically distinguish the dial type. One type is 'Pulse Dialing (PD)', also called 'Dial Pulse (DP)'. After the rotary dial on a dial phone is rotated, the dial returns to its original position. While returning, the electric current is interrupted (dividing the signal into pulses) the number of times corresponding to the number dialed. The switch derives the number from the number of pulses. When the pulse repetition rate is ten pulses per second, it is referred to as 10pps (Pulses Per Second), when twenty, 20pps. The other type is a method known as 'Tone Dialing (TD)', formally called 'Dual-Tone Multi-Frequency (DTMF)'. Each button on a push-button phone is assigned a unique pair of frequencies (the 'tone'), from which the switch derives the number. Refer to Figure 3.*

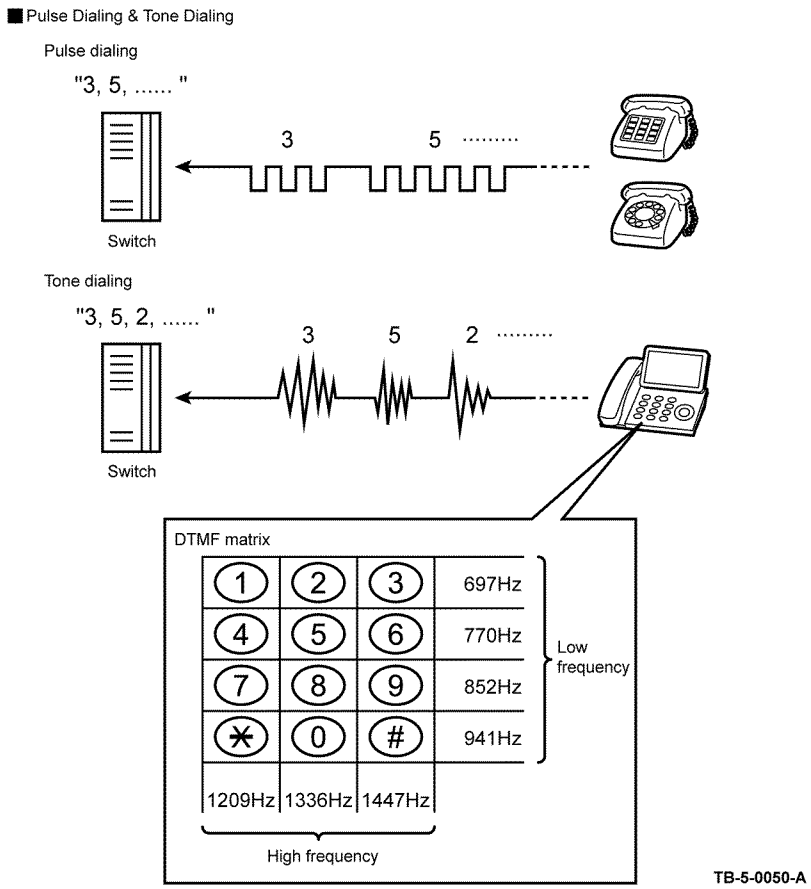

Figure 3 Dialing tones

1. The switch connects lines according to the transmitted number.
2. When a connection between local switches is established, the local switch of the called party sends a ringing signal to the telephone of the called party. The telephone that receives the ringing signal emits its ring tone. At the same time, the called party's local switch sends a ring back tone (RBT) to the calling party's telephone to indicate that a connection to the called party has been established.
3. When the called party's handset is lifted, activating the hook switch, the local switch on the called party side receives a response signal and stops sending tones to the calling and called parties. This is when a communications path is established between the both parties. Refer to Figure 4.

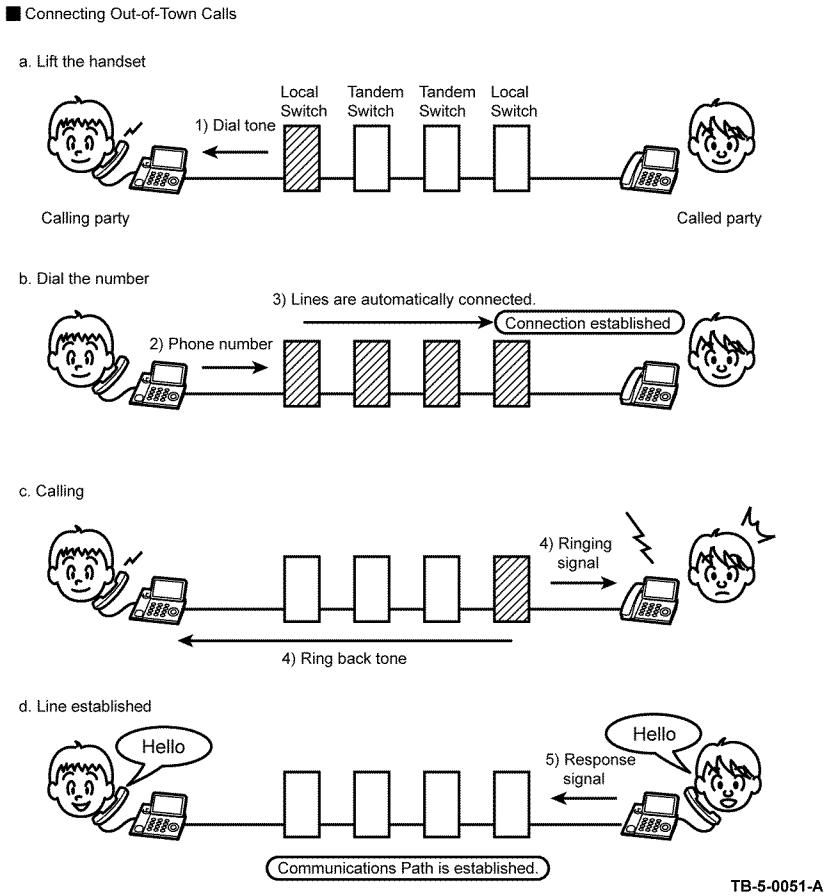

Figure 4 Out of town connection

Terminology

Line Types

- PSTN (Public Switched Telephone Network): Analog telephone network. If there is no switch on site, set the line type to PSTN.

- PBX (Private Branch Exchange): On-site switch that connects multiple analog telephones to a single line to establish an in-house phone system. If there is a switch on site, set the line type to PBX.

Dial Types

- Tone (Push) Dial/Pulse Dial (10pps)/Pulse Dial (20pps): Refer to Telephone Call Connection Mechanism. PPS: Pulse Per Second

Others

- Branch Connection: To connect multiple telephones to a single line in parallel. Telephones and Faxes may not function properly in this configuration.

Fax System (Overview)

A Fax (abbreviation of facsimile) is a device that sends and receives image data using either an analog or a digital telephone line. The following describes the analog line system (For G3, refer to Fax Standards (ITU-T Recommendations).

The three basic units of a Fax are the scanner (for reading the image), the control circuit, and the printer.

The scanner splits the image into a fine grid, then reads the brightness (white/black) of each cell. This operation is called scanning. The white/black information is converted to a digital signal: bright cells become 1, dark cells 0.

The digital signal from a scanned image is subjected to DA conversion (modulation) by the control circuit to enable transmission over an analog telephone line. After conversion, the data is sent as an analog signal. The sound audible during transmission is image data that has become an analog signal, that is, an audio signal.

The analog signal arriving over the telephone line is then subjected to AD conversion (demodulation) by the control circuit of the receiving Fax machine, and restored to a digital signal.

The black/white information obtained from the AD conversion is sent to the printer, where black cells are reproduced on the paper at the positions where they were on the original. Refer to Figure 1.

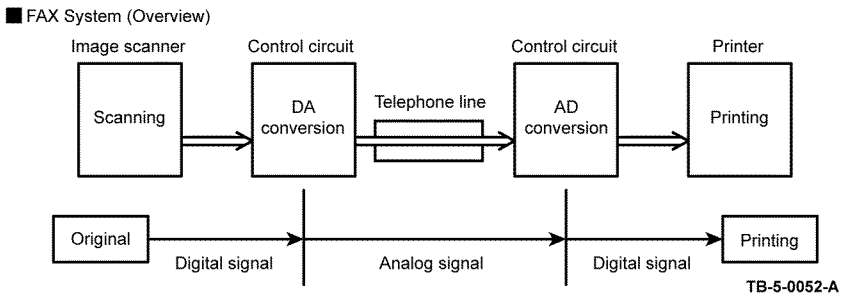

Figure 1 Fax system

Fax Unit Mechanisms

Scanner

The scanner consists of the Image Input Terminal (IIT) and the duplex auto document feeder (DADF). Document scanning is performed by the carriage assembly in the Image Input Terminal.

A CCD image sensor is a light-receiving element that produces an electrical signal in response to light.

The white areas of the original document reflect the light from the lamp. The black areas reflect no light. The CMOS image sensor read the light reflected from the original, outputting sequentially to the control circuit which areas are white and which black as binary data (1/0 digital data: 1 bit).

NOTE: *To scan the original, the carriage assembly (CCD image sensor unit) must be shifted a distance of one line after each line is scanned. When the original is scanned on the platen glass (as for a flatbed scanner), the carriage assembly is moved with respect to the original. In the case of a Fax equipped with the DADF, scanning via the DADF is performed by moving the original with the carriage assembly fixed at one position. This is known as constant velocity transport (CVT).*

NOTE: *During scanning, the finer the grid into which the original is divided, the greater the scanning precision of the original image. For a G3 Fax (normal mode: G3 Normal), scanning is performed at the resolution of 8 divisions per millimeter (200dpi) in the horizontal direction and 3.85 divisions per millimeter in the vertical direction. This means that the 200dpi in-line Carriage assembly is shifted approximately four times per millimeter in the vertical direction. For an A4 original, the data amounts to approximately two million pixels. In the high-quality mode (G3 Fine), scanning resolution is 8 divisions per millimeter in the horizontal direction and 7.7 divisions per millimeter in the vertical direction, where the data amounts to approximately four million pixels. As resolution increases, the amount of data also increases, lengthening the transmission time.*

Control Circuit

The control circuit executes scanning of image data by controlling the image scanner. A line of CCD image sensor scans the original image one line at a time. When scanning of one horizontal line is completed, the next line below is scanned. As this continues, the original is scanned from end to end one line at a time and converted to digital data as black-and-white information.

Because this image data is a set of digital signals, it cannot be transmitted using an analog telephone line. It must be subjected to DA conversion (modulation). On the other hand, the receiving Fax machine must perform AD conversion to restore the incoming digital data to analog data.

DA conversion, analog signal transmission, analog signal reception, and AD conversion are all performed by a modem (modulator/demodulator) in the control circuit. A modem consists of a network control unit (NCU) for connecting to the telephone line and an A/D conversion unit for performing DA and AD conversions. Refer to Figure 1.

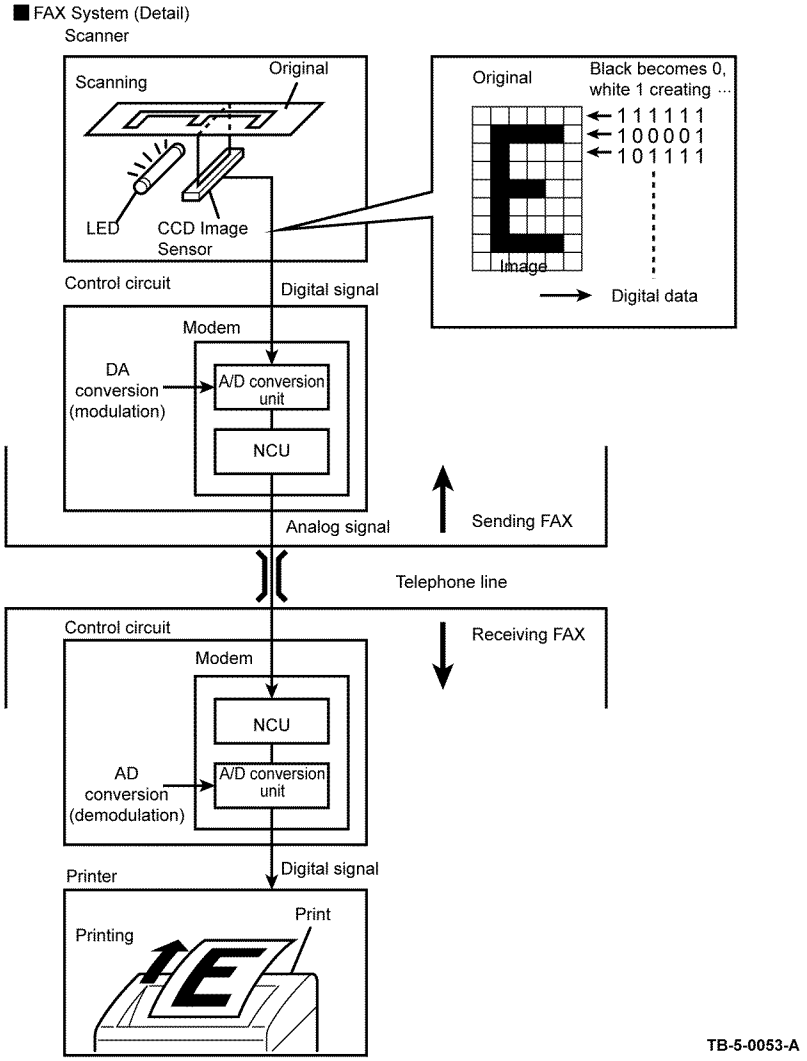

Figure 1 Scanner

NOTE: *After the telephone number is entered, the NCU automatically performs steps 1 and 2 of the line connection procedure described in Telephone Call Connection Mechanism. If on the receiving end, step 6 is automatically performed to answer.*

The following is the line connection procedure between two Faxes based on the steps 1 to 5 of telephone call connection mechanism. At the receiving Fax, step 6 is also automatically performed.

1. When an AT command (a modem control command) is sent from the control circuit to the modem, the hook switch is activated, and a state is obtained that is identical to that when the handset of a telephone is lifted. A dial tone (400Hz/48VDC) is sent from the local switch. The modem's speaker emits the dial tone as an audible sound.
2. After image scanning, the telephone number (a previously stored number, number entered by pressing phone buttons, etc.) is automatically dialed and transmitted to the local switch.
3. Steps 3, 4, and 5 for establishing a connection via the switches are identical to those for telephone.
4. The receiving party's Fax automatically answers when it receives the call signal, and the hook switch is activated. The local switch on the receiving party side receives a response signal and stops sending tones to the sending and receiving parties, thereby establishing a communications path between the both parties.

In the case of a telephone call, only voice conversion between the two parties follows. For Fax, preparation for delivery of image data is required that includes the following types of exchanges:

- The sending Fax indicates that the transmission is a Fax transmission.
- The receiving Fax indicates that it is ready to receive and also its communications capacity.
- The sending Fax then sends data in accordance with the receiving Fax's communications capacity.

Once mutual preparation is completed, image data sending and receiving is started. Image data is modulated into an analog signal by the A/D converter at the sending Fax, then sent from its NCU. Image data received by the NCU of the receiving Fax is demodulated into a digital signal by its A/D converter and then sent to the control circuit. When image data reception is completed, the Fax automatically disconnects the line (hook is off).

In summary, the NCU automatically executes a series of such operations from hook switch on to hook switch off.

NOTE: *The control circuit also retains other important functions such as data compression and memory. With data compression, any part of the scanned image data that consists of continuous white or black pixels is encoded into a single element, thus compressing the volume of data. Memory temporarily stores data during transmission and reception.*

Printer

The printer prints image data from the control circuit onto the surface of paper. The principle is the same as that of an ordinary printer in that black is applied to specified locations on the paper.

Fax Standards (ITU-T Recommendations)

International Fax standards (ITU-T recommendations) include G1 to G4. G1 to G3 use analog telephone networks. G4 uses a digital telephone network (ISDN). G3 is the standard currently in greatest use. Faxes conforming to Super G3, a recently added standard, are equipped with a fast 33.6kps modem and reduce transmission times to about half those of G3 Faxes. Refer to Table 1.

Table 1 ITU-T recommendations

Standard	Year Issued	Minimum Transmission Time for Single-Page A4 Document	Maximum Resolution	Maximum Transmission Speed	Features
Group 1 (G1)	1968	Approx. 6 min.	100 x 100dpi	- (Analog)	First standard. Analog transmission. No band compression technology
Group 2 (G2)	1976	Approx. 3 min.	100 x 100dpi	- (Analog)	Analog transmission. Band compression technology adopted.
Group 3 (G3)	1980	Approx. 1 min (14.4kbps) Approx. 3 sec (33.6kbps)	600 x 600dpi	14.4kbps (Super G3: 33.6kbps)	Connection to analog line using Fax modem. Image data in digital format. Data compression. Most common standard in use.
Group 4 (G4)	1988	Approx. 3 sec.	400 x 400dpi	64kbps (Using ISDN)	Digital transmission. Supported by various digital transmission services. Halftone supported.

Near Field Communication (NFC)

Overview of NFC

NFC is a standard for short distance radio communication using the radio frequency band of 13.56 MHz.

The device is provided with a user authentication feature using MIFARE cards, contactless smart cards supporting NFC.

A smart card reader/writer is installed at the NFC-marked portion of the operator panel of the device.

NFC is defined as a set of internationally certified radio communication technology standards for existing smart cards and radio-frequency identification (RFID) system including ISO/IEC18092 (NFC IP-1) and ISO/IEC21418 (NFC IP-2).

Refer to each component standard for further details on NFC.

Basic Principle of Operation of NFC

A smart card contains an IC chip and an antenna that allow the data stored in the IC chip to be read when brought into the close proximity of a card reader/writer. Refer to Figure 1.

Data communication using a smart card consists of the steps that follow:

1. The user brings a smart card into the close proximity of the card reader/writer.
2. The card reader/writer generates an electromagnetic field.
3. Induced current flows in the antenna, allowing the IC chip to operate.
4. The smart card and the card reader/writer perform bidirectional authentication and communication (read/write of data).

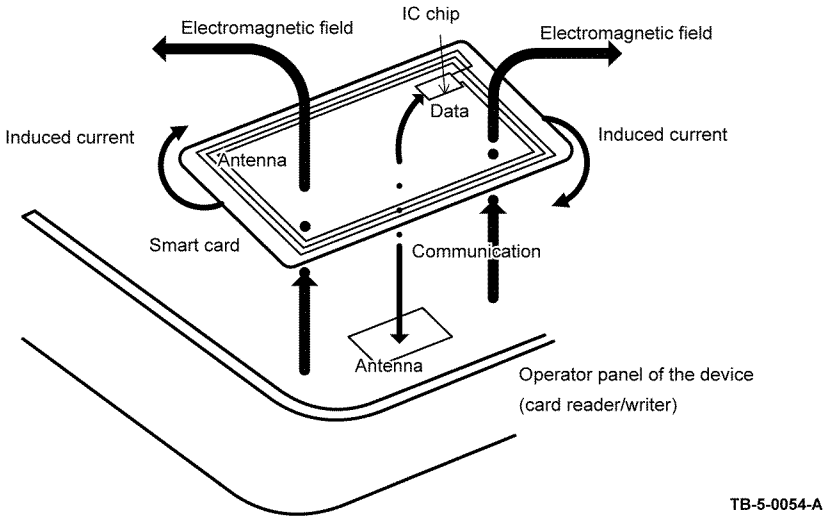

Figure 1 Basic principles